090.112.6525
TR.073

32.

RESTRICTED

AUSTRALIAN AIRCRAFT RESTORATION GROUP
BOX 1765Q, G.P.O. ELIZABETH ST., MELB. 3001

AUSTRALIAN AIRCRAFT RESTORATION GROUP
BOX 1765Q, G.P.O. ELIZABETH ST., MELB. 3001

R.A.A.F. Publication No. 802
FEBRUARY, 1947

THE
AUSTRALIAN LINCOLN
MK. 30

DESCRIPTIVE MANUAL

ISSUED FOR THE INFORMATION
AND GUIDANCE OF ALL CONCERNED
BY COMMAND OF THE AIR BOARD.

SECRETARY.

AIR FORCE HEAD-QUARTERS, MELBOURNE, S.C.1

PRINTED BY R.A.A.F. PRINTING AND PUBLICATIONS UNIT, MELBOURNE

RESTRICTED

R.A.A.F. PUBLICATION
No. 802

AUSTRALIAN LINCOLN DESCRIPTIVE MANUAL

NOTES FOR OFFICIAL USERS

Air Board and R.A.A.F. Technical Orders and Instructions as issued from time to time, may affect the subject matter of this publication.

The order or instruction must be taken as the overriding authority where it contradicts any portion of this publication, and an amendment list to bring the publication into line will generally be issued.

It should be understood that amendment lists may not always be issued, and when this occurs, it is the duty of the holder of this publication to keep his copy in line with current orders and instructions.

Contents

A detailed contents list is provided at the start of each Section and Chapter; and an Index, to facilitate quick reference, is contained after Section 12 of this volume.

INTRODUCTION.

LEADING PARTICULARS.

SECTION 1.— PILOT'S CONTROLS AND EQUIPMENT.

SECTION 2.— EMERGENCY CONTROLS, EQUIPMENT AND EXITS.

SECTION 3.— CONTROLS AND EQUIPMENT AT CREW STATIONS.

SECTION 4.— INSTRUCTIONS FOR GROUND PERSONNEL.
- Chapter 1.— Loading and C.G. Data.
- Chapter 2.— Ground Handling and Preparation for Flight.
- Chapter 3.— General Servicing.

SECTION 5.— REMOVAL, ASSEMBLY AND DISMANTLING OPERATIONS.

SECTION 6.— ELECTRICAL AND RADIO WIRING AND SERVICING.
- Chapter 1.— Electrical Servicing.
- Chapter 2.— Radio Servicing.

SECTION 7.— DESCRIPTION OF STRUCTURE.
- Chapter 1.— Fuselage.
- Chapter 2.— Main Plane.
- Chapter 3.— Tail Unit.
- Chapter 4.— Flying Controls.
- Chapter 5.— Alighting Gear.

SECTION 8.— ENGINE INSTALLATION.

SECTION 9.— HYDRAULIC AND PNEUMATIC SYSTEMS.

SECTION 10.— ELECTRICAL AND RADIO INSTALLATIONS.
- Chapter 1.— Electrical Installation.
- Chapter 2.— Radio Installation.

SECTION 11.— EQUIPMENT INSTALLATIONS.

SECTION 12.— ARMAMENT INSTALLATIONS AND SERVICING.
- Chapter 1.— Bombing Equipment.
- Chapter 2.— Turrets.

INDEX



THE AUSTRALIAN LINCOLN — Mk. 30

INTRODUCTION

1. The LINCOLN Mk. 30 is an all-metal mid-wing monoplane, having four Merlin 85 power plants, fitted with variable-pitch constant speed propellers. The aircraft is designed and equipped for heavy bomber duties and carries a crew of seven consisting of a captain, second pilot, air observer (navigator-air-bomber), two wireless operator-air gunners and two air gunners.

2. The fuselage is constructed of light alloy and incorporates transverse formers braced with longitudinal stringers covered with a light-alloy skin. Two longerons carry the cross members of the main floor in which the bomb gear is housed. To facilitate transport the fuselage is divided into four sections, viz., front section comprising the nose and front centre sections, the intermediate centre section consisting of the fuselage between the spars and the centre part of the main plane, the rear centre section, and the rear fuselage which carries the tail unit.

3. The main plane is of the two-spar type and consists of two intermediate planes attached to the centre plane, which is integral with the fuselage centre section, and two outer planes. The intermediate and outer planes are tapered in plan and elevation. The skin covering is of light-alloy sheet. Six fuel tanks are housed in the main plane, one between each inboard nacelle and the fuselage and two in each intermediate plane. The two inboard fuel tanks are the rigid type, and the other four are the collapsible pattern and removable from the top side of the main plane. The main undercarriage units are housed in the inboard engine nacelles (see para. 7).

4. The tail plane construction is similar to that of the main plane. The twin fins and rudders are attached to the extreme ends of the tail plane, and these and the elevators are covered with light-alloy skin.

5. The entrance door is on the starboard side of the fuselage just forward of the tail plane. The door opens inwards and entry is made by means of a ladder, fitted with hooks for attachment to the bottom of the door frame.

6. The flying controls are conventional, pendulum-type rudder pedals operating the rudders and a handwheel type control column operating the ailerons and elevators. Tubular push-pull connections are used, except for the aileron controls in the fuselage, which consist of chains, tie rods and cables. Trimming tabs are inset in the trailing edge of the rudders, elevators and ailerons, and balance tabs are fitted to the elevators and ailerons. Mark VIII automatic controls are fitted. Hydraulically-operated split-trailing edge flaps extend from the fuselage sides to the ailerons.

7. The undercarriage consists of two retractable main wheel units, one under each inboard engine nacelle, and a fully-castering non-retractable tail wheel unit. Each main wheel unit is retracted backwards into the engine nacelle by means of two hydraulic jacks. When retracted the units are completely faired in by doors which are interconnected with the shock-absorber struts and automatically close when the wheels retract. A compressed air system is installed for lowering the main wheels in an emergency.

8. The four engines, which are equipped with two-stage, two-speed superchargers, are mounted on nacelle structures built out from the centre and outer plane spars, and are fitted with Rolls-Royce Bendix carburettors. The fuel supply is by gravity from the main tanks to distributor tanks mounted on the rear face of the inboard engine firewalls, and thence to the engines. Pulsometer pumps are mounted on the base of the distributor tanks. The normal supply to the engines on either side is from the relative tanks but when required all four engines may be fed from one side by means of a cross-feed system. The inboard oil tanks are mounted behind the front spar in the undercarriage compartments, and the outboard tanks in the engine sub-frames.

9. A single pump mounted on each inboard engine auxiliaries gearbox supplies power for the hydraulic operation of the retractable main wheel units, main plane flaps, bomb door jacks and fuel jettison system. An Arrow type compressor mounted on the port inboard engine auxiliaries gearbox, working at high pressure, operates the pneumatic brake system and the electro-pneumatic power plant controls. The latter comprise radiator shutter, supercharger, slow-running cut-out, air-cleaner controls and hot and cold air intake shutters. Two vacuum pumps on the port inboard engine gearbox operate the bomb sight and computor and another pump on the starboard inboard engine gearbox operates the gyroscopic instruments on the instrument flying panel.

10. The gun armament consists of two electro-hydraulically operated turrets located in the nose and tail, and one electrically-operated dorsal turret. The first two each carry two ·5 in. guns; the third is fitted with two 20 m.m. guns. Alternative armament may, in some cases, take the place of the nose turret. Various bomb loads may be carried in the bomb compartment in the lower portion of the fuselage. These include small-bomb containers, mines, and 250 lb. to 4,000 lb. bombs. Provision is made for under-defence when required.

11. An earth-return wiring system is used. The D.C. power supply is provided by four 30-volt, 6 k.w. generators, driven through the auxiliary gearboxes of each engine. The generators are connected in parallel for the charging of four 12-volt, 40 amp. hr. accumulators, the latter being interconnected to give a 24-volt, 80 amp. hr. supply to operate all the general electrical services. Two power distribution panels, situated port and starboard respectively in the fuselage centre section, carry four Type 23 voltage control regulators, four Type J cut-outs and Type D circuit breakers. The Type 23 regulators are connected in parallel to a master voltage-control regulator, Type 32. Type A circuit breakers control various banks of fuses to the general services. Three distributor boxes are provided. Two 2,000 watt, Type IV motor driven alternators supply the current for the radio installations. The radio equipment consists of an electrically remotely-controlled transmitter/receiver installation for the pilot, with fire control facilities at the pilot's, air-bomber's and astro-dome stations; I.F.F. at the navigator's station; and a general purpose transmitter/receiver at the wireless operator's station. Inter-communication between members of the crew is provided by independent use of the amplifier and the pilot's transmitter/receiver. Independent fixed aerials are fitted for all sets, and an additional trailing aerial for the general purpose set.

12. Hand-operated de-icing equipment is provided for the air-bomber's window and the pilot's windscreen.

13. Provision is made in the fuselage between the main plane spars for the fitting of armour-plate doors if required. The formers at certain positions are reinforced with armour plate. Emergency exits in the roof of the fuselage, and a parachute exit in the floor of the nose, are provided.

14. Other equipment includes portable oxygen apparatus, F.24 camera, signal pistol, hand signal lamp, reconnaissance flares, sea markers, fireman's axes, first-aid outfits, fire extinguishers, Type Q flotation dinghy, Type K dinghies, pigeon containers and an Elsan sanitary closet.

Leading Particulars

Name	Australian Lincoln Mk. 30.
Type	Four-engined mid-wing monoplane.
Duty	Heavy bomber.
No. of Crew	7 (including pilot).

PRINCIPAL DIMENSIONS:

Aircraft in rigging position unless otherwise stated

Span	120 ft. 0 ins.
Length	78 ft. 4 ins.
Height — To top of rudders	20 ft. 3 ins.
Height — To tips of propellers (tail down) ...	17 ft. 10½ ins. (approx.)
Height — To tips of wing above ground ...	13 ft. 10 ins. (approx.)

Main Plane:

Aerofoil section, root	N.A.C.A. 23018
Root chord	16 ft. 0 ins.
Tip chord	5 ft. 2·875 ins.
Incidence — Port	4° 6′
Incidence — Starboard	3° 54′
Dihedral — On datum (rear spar) ...	3° 30′
Dihedral — On top surface (rear spar)...	2° 10′
Aileron — span	24 ft. 8 ins.

Tail Unit:

Tail plane — span	33 ft. 0 ins.
Tail plane — root chord	8 ft. 6½ ins.
Tail plane — incidence	1° 15′

Areas:

Main plane, including ailerons (gross) ...	1421 sq. ft.
Main plane, including ailerons (nett) ...	1326 sq. ft.
Ailerons, total (including tabs)	113·3 sq. ft.
Trim tabs (two)	2 sq. ft
Servo balance tabs (two)	4·3 sq. ft.
Flaps, total	146 sq. ft.

Tail plane:

Tail plane (including tabs)	87·5 sq. ft.
Trim tabs (two)	2·9 sq. ft.
Servo balance tabs (two)	4·2 sq. ft.

Fin and Rudder:

Fins and Rudders, total, including tabs...	113·0 sq. ft.
Rudders (two), with tabs...	42·8 sq. ft.
Trim tabs (two)	3·3 sq. ft.

RANGES OF MOVEMENT AND NOMINAL CONTROL SURFACE SETTINGS:

(Refer Section 4, Chapter 3, Figure 10, for full details.)

Ailerons	UP 12° DOWN 12°
Trim tabs	UP 19° DOWN 19°
Servo balance tabs	UP 12° DOWN 12°
Elevators	UP 28° DOWN 14° 45′
Trim tabs	UP 6° DOWN 6°
Servo balance tabs	UP 11° 45′ DOWN 22° 15′
Rudders	INWARDS 22° 45′ OUTWARDS 22° 15′
Trim tabs	INWARDS 22° OUTWARDS 22°
Flaps	DOWN 56° 30′

ALIGHTING GEAR:

Main Undercarriage:

Type	Two retractable single-wheel units with twin shock-absorber struts.
Track	23 ft. 9 ins.
Shock-absorber struts	Dowty oleo-pneumatic.
Fluid	Specification D.T.D. 585 or AN–VV–366B (R.A.A.F. Stores Ref. K2/138).

	75,000 lb. Max. all up weight.	*Above 75,000 lb. all up weight.*
Type	A.9833	A.4487
Air pressure (no load)	1,200–1,250 lb. per sq. in.	1,200–1,250 lb. per sq. in.
Wheels	A.H.8268	A.H.8405
Tyres:		
Covers	H.J.–R14–N (64×22·50–26)	H.J.–R16–N (64×22·50–26)
Tubes	H.J.8	H.J.8
Brakes	A.H.8269	A.H.8269

Working pressure — differential relay control valve at neutral 125 lb. per sq. in. Maximum pressure on either side with full rudder must not exceed 200 lb. per sq. in.

Tail Wheel Unit:

Type	Non-retractable, castering.		
Shock-absorber strut	Dowty oleo-pneumatic		
Fluid	D.T.D.585 or AN–VV–366B (R.A.A.F. Stores Ref. K2/138).		
	7,800 lb. tail load.	*Above 7,800 lb. tail load.*	
Type	A.6840	... ...	A.6840
Air pressure (no load)	650–700 lb. per sq. in.	... ...	725–775 lb. per sq. in.
		Type A634Y strut (fitted with Shimmy Eliminator)	650–700 lb. per sq. in.
Wheel...	A.H.8013	... ...	A.H.8403
Tyre-Tube	Type A.6840 shock-absorber strut — tyre cover, NX R30 (twin contact) 12·50 — 10; tube NX2. Type A.634Y (Shimmy Eliminator) shock-absorber strut — tyre cover, FF.ER.17–N (normal section) 32 × 10·00 — 15; tube FF.2.		

HYDRAULIC SYSTEM

Fluid	Specification D.T.D. 585 or AN–VV–366B (R.A.A.F. Stores Ref. K2/138).
System capacity	19 gals. approx.
Automatic cut-out —	
Cutting-in pressure...	460–510 lb. per sq. in.
Cutting-out pressure	825–875 lb. per sq. in.
Accumulator inflation pressure	220 lb. per sq. in.
Emergency system (undercarriage and flaps only) air bottles inflation pressure	1200–1300 lb. per sq. in.

PNEUMATIC SYSTEM

Air bottle inflation pressure	450 lb. per sq. in.
Reducing valve pressure	220 lb. per sq. in.
Maintaining valve pressure	150–160 lb. per sq. in.

NITROGEN SYSTEM

Nitrogen bottle inflation pressure	1,800 lb. per sq. in.

POWER PLANTS

Name	Merlin 85B
Type	12–cylinder, 60° V-type, pressure-liquid-cooled, fitted with a two-speed, two-stage liquid-cooled supercharger with intercooler.
Number	Four
Fuel	100 Octane
Oil	D.E.D. 2472B or C

Coolant:

Engine system supercharger intercooler ...	30% ethylene glycol Specification K.22 (R.A.A.F. Stores Ref. No. K4/10332) or Specification AN–E–2A or AN–E–2B (R.A.A.F. Stores Ref. No. K4/10584) and 70% distilled water. (For latest instructions see E.G.I.78.)
Fuel pumps on distributor tanks	Pulsometer, type F.B. Mk.II
Fuel pressure warning switches setting	13 lb. per sq. in.

PROPELLERS

Type	De Havilland 24 DX ADH 49
Control	Constant speed, feathering
Governor	4G8 ADH 32

Pitch Setting:

Fine	24° 2′
Feathered	90° 2′
Diameter	13 ft.
Direction of rotation	Right-hand tractor

TANK CAPACITIES

Fuel Tanks:

No. 1 tanks, one port, one starboard, each 580 gals.	1,160 gals.
No. 2 tanks, one port, one starboard, each 545 gals.	1,090 gals.
No. 3 tanks, one port, one starboard, each 300 gals.	600 gals.
Total fuel (normal)	2,850 gals.
Fuselage auxiliary tank No. 1	400 gals.
Fuselage auxiliary tank No. 2	400 gals.
Total fuel (overload)	3,650 gals.

Oil Tanks (two port and two starboard):

Inboard tanks, each	oil 37½ gals. ...	75 gals.
	air space 4½ gals.	
Outboard tanks, each	oil 37½ gals. ...	75 gals.
	air space 4½ gals.	
Total oil		150 gals.

Windscreen De-icing:

De-icing fluid tank	4 gals. (approx.) de-icing fluid Specification D.T.D. 406 (R.A.A.F. Stores Ref. No. K4/10022)

ELECTRICAL SYSTEM

Wiring system	Breeze
Type	Earth Return

Generators:

Type	P2–6,000 w. (R.A.A.F. Stores Ref. G5U/4531.)
Number	Four (one on each engine auxiliaries gearbox)

Alternators:

Type	4–2000 w. (R.A.A.F. Stores Ref. G5U/2402 or G5U/3884)
Number	Two

Accumulators:

Type	12–volt, 40 amp. hr.
Number	Four, connected to give 24–volt, 80 amp. hr. supply

AIRSPEED INDICATOR PRESSURE HEAD

For particulars of Position and Incidence see relevant fig. in Section 11.

Section 1

Pilots Controls & Equipment.

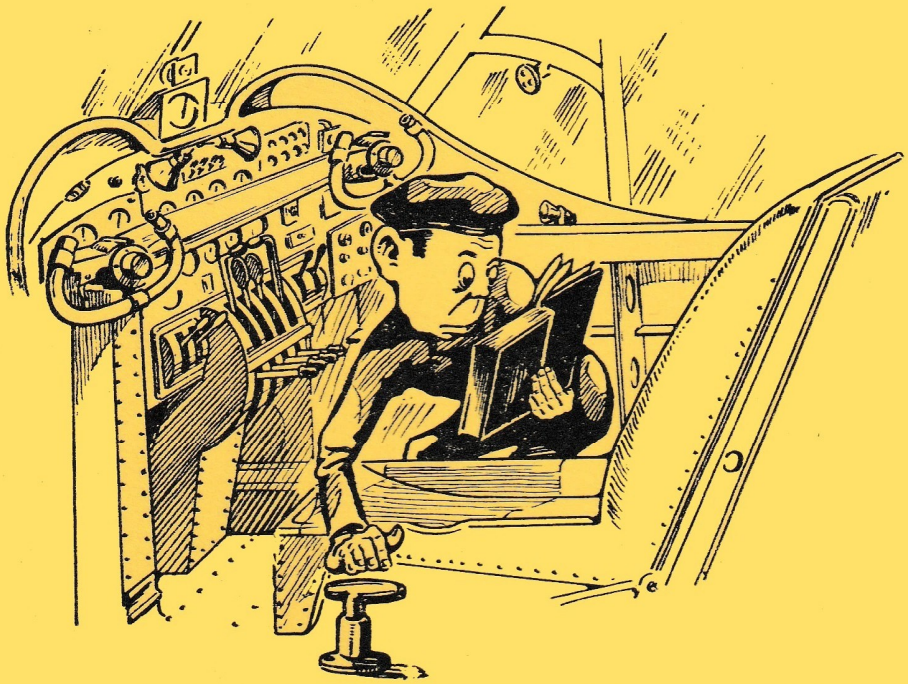

BE CAREFUL EGBERT - THAT HAPPENS TO BE THE FUEL JETTISON HANDLE. STUDY THE LOCATION OF THE CONTROLS & INSTRUMENTS SHOWN IN ILLUSTRATIONS, NUMBERED 1 - 4, OF THIS SECTION.

SECTION 1

Pilot's Controls and Equipment

CONTENTS

	Para.
GENERAL	1
FUEL AND OIL	4
FUEL SYSTEM —	
General	5
Master Engine Cocks	6
Cross Feed Cock	7
Electric Fuel Pumps	8
Auxiliary Fuel System	10
Nitrogen System	11
OIL SYSTEM	12
Oil Temperature and Pressure Gauges	14
HYDRAULIC SYSTEM —	
General	15
Undercarriage Control Lever	16
Bomb Door Lever	17
Flaps Control Handle	18
Flaps Position Indicator	19
Fuel Jettison Control Handle	20
PNEUMATIC SYSTEM	21
VACUUM SYSTEM	22
ELECTRICAL SYSTEM	23
Emergency Cockpit Lighting	24
Main Undercarriage Position Indicator	25
ENGINE CONTROLS —	
General	26
Supercharger Controls	29
Slow-running Cut-outs	30
Air Cleaner Switch	31
Hot and Cold Air Intakes	32
HEATING AND VENTILATION	33
OXYGEN	34
FLYING CONTROLS —	
General	35
Rudder Controls	36
Ailerons Control	37
Elevators Control	38
Trimming Controls	39
TRIMMING TABS —	
Elevator Balance Tabs	40
Aileron Balance Tabs	41
FLYING CONTROLS LOCKING GEAR	42
RADIO	43
Intercommunication	46
SEATS, DOOR AND WINDOWS —	
Pilot's Seat	48
Second Pilot's Seat	49
Direct Vision Windows	50
Door	51

ILLUSTRATIONS

	Fig.
Engine Controls and Instruments	1
Flying Controls and Instruments	2
Navigational, Signalling and Lighting Equipment	3
Operational and Miscellaneous Controls and Instruments	4

Pilot's Controls and Equipment

General

1. This section is a general guide to the location of controls and equipment in the pilot's cockpit, and indicates briefly the method, where this is not apparent, of operation of the controls. The location of other controls and equipment is referenced on Figs. 1, 2, 3 and 4, at the end of this section.

2. Some information is given about equipment elsewhere in the aircraft with which the pilot should be acquainted. Main services are briefly described.

3. For the operation and location of other equipment at the pilot's station, reference should be made to Sections 2 and 3.

FUEL AND OIL

4. The fuel and oil to be used for the engines are as follow:—

Fuel — Specification 100 octane.

Oil — Specification D.E.D. 2472 B or C.

FUEL SYSTEM

General

5. Six self-sealing fuel tanks, numbered 1, 2 and 3 on each side outboard from the fuselage, are fitted in the main plane. The four outboard tanks are the collapsible type. The capacities are given in Leading Particulars. Two small distributor tanks, one on the firewall of each inboard power plant, are fed by gravity from the main tanks. Fuel may be drawn from the distributor tanks by the engine pumps, or delivered to the engines under pressure by the Pulsometer electric pumps which are mounted in the base of the distributor tanks. The fuel systems in the port and starboard planes are identical and entirely independent, but are interconnected by a cross-feed pipe and cock. This cock is normally kept shut. No tank selector cocks are fitted, all the tanks on each side feeding together into the fuel distributor tank (ground servicing cocks only are provided in the delivery lines).

Master Engine Cocks

6. The fuel supply to each engine is controlled by a Master Cock, the pilot operating the four cocks from levers on either side of the control pedestal (see Fig. 1).

Cross-feed Cock

7. The cross-feed cock is mounted on the floor just forward of the front spar, with the control handle visible through the front spar cover.

Electric Fuel Pumps

8. Two pulsometer pumps are fitted to each distributor tank, each pump being controlled by a switch on the flight engineer's panel, beneath the fuel pressure indicators (see Section 3, Fig. 3). Push-buttons below the switches are used for testing the pumps in conjunction with the ammeter on the panel. The switches should remain OFF for testing.

9. The main purpose of the electric fuel pumps is to maintain pressure at altitude. They are also used for carburettor priming before starting the engines, and at take-off; the pumps on the delivery side must be ON when the cross-feed cock is opened to supply all the engines from one side. The following label appears on the flight engineer's panel:—

BOOSTER PUMPS MUST NEVER BE ON WITH MASTER ENGINE COCK OPEN AND ENGINE STATIONARY *UNLESS* SLOW-RUNNING CUT-OUT SWITCH IS IN IDLE CUT-OFF (DOWN) POSITION AND AIR SUPPLY NOT LESS THAN = 160 lbs. ON THE GAUGE.

For further information on the use of the pumps, see Pilot's Notes.

Auxiliary Fuel System

10. Provision is made for carrying one or two auxiliary fuel tanks in the bomb compartment. These tanks are connected so that they may be used to refuel either of, or both, the No. 1 tanks, delivery being controlled by two cocks behind the front spar. The pump switches and test push-buttons are on the flight engineer's panel. (See Section 3, paragraph 21, Fig. 3.)

Nitrogen System

11. This system is inoperative at the present time but, when connected, nitrogen is introduced into the tanks as the fuel is withdrawn, to minimize fire risk. The control cock is on the starboard side of the fuselage, approximately midway between the front and rear spars.

OIL SYSTEM

12. Each engine has its own oil system, provided by a self-sealing oil tank fitted in each nacelle. The inboard tank is fitted behind the front spar and the outboard tank between the sub-frame tubing. The normal oil capacity of each tank is 37½ gallons, with 4½ gallons air space; two gallons of oil for the hydromatic propeller feathering unit are included in the 37½ gallons.

13. If the tanks are inadvertently overfilled, there is a drain cock at the bottom of each tank. Normal high-pressure oil feeds the hydromatic propeller feathering units. Under cruising conditions, it is recommended that the oil temperature should not exceed 60° C., but up to 90° C. may be used without damage to the engines. The oil consumption ranges between 8 and 16 pints per hour.

Oil Temperature and Oil Pressure Gauges

14. The oil temperature gauges are mounted on the flight engineer's panel (see Section 3, paragraph 21 and Fig. 3), and the oil pressure gauges are mounted on the pilot's instrument panel (see Fig. 1). An installation and pipe line diagram is described and shown in Section 8, paragraph 20, and Fig. 12, respectively.

HYDRAULIC SYSTEM

General

15. The general services hydraulic system derives its power from two pumps, one on each inboard power plant auxiliary gear box, and feeds the following services:—

(i) Main undercarriage.
(ii) Flaps.
(iii) Bomb doors.
(iv) Fuel jettison system.

Provision is made for emergency operation by compressed air (see Section 2, paragraph 3) of the first two circuits.

Undercarriage Control Lever

16. The Alighting Gear Control Lever is situated at the rear of the trimmer controls box. The manually controlled lever moves in a natural sense; with the lever UP, the undercarriage is raised, and with the lever DOWN, the undercarriage is lowered. A spring-loaded bolt, mounted transversely, prevents inadvertent UP. A position indicator is provided on the instrument panel (see paragraph 25).

Bomb Door Lever

17. The bomb door lever is situated at the left of the pilot's seat, and is lifted UP to open and DOWN to close.

Flaps Control Handle

18. This handle, situated on the right-hand side of the cockpit just forward of the trimmer controls box, operates in a natural sense. A spring-loaded catch indicates the neutral position, to which the handle must be returned as soon as the position indicator shows the desired setting.

Flaps Position Indicator

19. The position indicator for the flaps is situated approximately in the centre of the pilot's panel (see Fig. 2), the up and down position being indicated by a pointer.

Fuel Jettison Control Handle

20. The fuel jettison control handle is situated at the left-hand side of the pilot's seat. For the precautions and operation of the fuel jettison system, refer to Section 2, paragraph 6.

PNEUMATIC SYSTEM

21. This system operates:—
Wheel brakes,
Radiator shutters,
Supercharger change-speed,
Slow-running cut-outs,
Hot and cold air intakes,
Air cleaner.

A Heywood compressor is fitted on the starboard inboard auxiliary gear box, and charges an air bottle mounted in the roof of the fuselage nose. The wheel brakes are controlled by a lever (with a parking catch) on

the hand wheel. Differential control is provided by the rudder pedals, and a triple pressure gauge is fitted on the left side of the instrument panel.

Note.—A pressure maintaining valve in the supply line from the air bottle allows pressure to be supplied to the power plant services only if the pressure in the air bottle exceeds 160 *lbs. per sq. in.; this is to ensure sufficient pressure for the brakes. Before attempting to operate the power plant services, therefore, it is necessary to check on the triple pressure gauge that the pressure in the air bottle is at least* 160 *lbs. per sq. in.*

VACUUM SYSTEM

22. Three suction pumps are fitted, two connected to one pipe line on the auxiliaries gear box driven by the port inboard engine, and one on the auxiliaries gear box driven by the starboard inboard engine. The two supply lines are controlled by a vacuum change-over cock on the right side of the instrument panel. At NORMAL, the single pump is connected to the instrument-flying panel and the two pumps to the Mk. XIV bomb sight and computor, with a branch to other special equipment, when fitted. At EMERGENCY, these connections are reversed. The vacuum gauge is connected to the pipe line from the instrument-flying panel.

ELECTRICAL SYSTEM

23. One 30 volt, 6 kw. generator is fitted on each engine auxiliaries gear box. As the generators are connected in parallel, the failure of any one generator does not involve the failure of any particular service. A voltmeter, four generator charge warning lamps, four "push-to-break" switches (for testing), four generator switches and one emergency master switch are mounted on a panel on the starboard side forward of the front spar. The cut-outs, voltage regulators and circuit breakers are on two panels on the port and starboard sides of the fuselage respectively, between the spars. The GROUND/FLIGHT switch is mounted on panel 3P. Current for the radio installation is supplied by two 2000 watts type 4 motor driven alternators.

Emergency Cockpit Lighting

24. In the event of failure of the electrical system an emergency light is fitted at the pilot's station, independently supplied by a small 2 volt accumulator and controlled by a toggle switch on the port cockpit rail.

Main Undercarriage Position Indicator

25. The main undercarriage position indicator is positioned on the left-hand side of the pilot's instrument panel in line with the control column (see Fig. 3). The indicator becomes operative when the ground flight switch is turned to flight, and gives the following warning lights:—

Undercarriage LOCKED in DOWN position — Two green lights.

In the UNLOCKED position — Two red lights.

In the LOCKED-UP position — No light.

A warning horn sounds if the inboard throttles are closed, unless the undercarriage is locked DOWN.

ENGINE CONTROLS AND INSTRUMENTS

General

26. The pilot's throttle and propeller control levers are grouped in positional sequence in gated quadrants on the central control pedestal; four master fuel cock levers are arranged at each side on an extension of the pedestal below the pilot's instrument panel (see Fig. 1).

27. Port fuel cock levers are at the left side and starboard fuel cock levers at the right. The boost control cut-out lever is at the extreme left; this lever is inoperative and is locked on Lincoln Mk. 30 aircraft.

28. The throttle and propeller speed control levers have adjusters for stiffness of the controls provided on the side of the quadrant, the friction discs of which must be kept perfectly dry.

Supercharger Controls

29. The two-speed, two-stage supercharger is controlled through an electro-pneumatic ram, operated by an altitude switch mounted just forward of the flight engineer's panel; a

warning light mounted beside the starter push buttons located at the top right-hand of the pilot's instrument panel should light up when the supercharger control is at F.S. A two-position selector switch is mounted adjacent to the warning lamp. For further details, see Sections 6, 9 and 10 respectively.

Slow-running Cut-outs

30. The slow-running cut-out for each engine is controlled by separate switches on the upper right-hand side of the pilot's panel.

Air Cleaner Switch

31. The air cleaners on each engine normally come into operation when the undercarriage is down, but provision is made for operation in flight; a switch for this purpose is provided on the right-hand side of the instrument panel.

Note.—The air cleaners are not operative if the air pressure is below 160 *lbs./sq. in., or if the undercarriage is lowered. (See Section* 9).

Hot and Cold Air Intakes

32. The shutters governing the hot and cold air intakes for each engine are electro-pneumatically operated and are controlled by a switch located beside the air cleaner switch.

Note.—The shutters are not operative if the air pressure is below 160 *lbs./sq. in.*

HEATING AND VENTILATION

33. The admission of hot air into the section of the fuselage forward of former 8 is controlled by a knob on the starboard side just forward of the front spar. To introduce hot air, turn the knob counter-clockwise. An adjustable extractor louvre is provided on the port side of the fuselage nose.

OXYGEN

34. The pilot's flexible oxygen pipe is secured by spring clips to the port cockpit rail. The economizer is located below the rear end of the pilot's floor, together with the second pilot's economizer and flexible pipe. A regulator, which controls the supply throughout the aircraft, is fitted on the right of the instrument panel. A portable oxygen bottle for the pilot is mounted on the back of his seat.

FLYING CONTROLS

General

35. The control system which actuates all control surfaces is operated from the pilot's cockpit by standard control wheel and rudder pedal assemblies. Movement of the control is transmitted to the control surfaces by the medium of cables, chains, push-pull rods and bell cranks. Flaps are operated hydraulically. For location of control handle and position indicator, see paragraphs 18-19. A Mk. VIII Automatic Pilot is fitted (for further details, see Section 11), and the location of controls is shown in Fig. 2. For further information, reference should be made to A.P.1469c.

Rudder Controls

36. The rudders are controlled by two pendulum type U-shaped foot pedals, pivoted on torque shafts and carried on ball bearings and brackets attached to the top of the fuselage nose forward of the pilot's instrument panel. The shafts are interconnected by means of spur gears, causing them to rotate in opposite directions. The pedals are adjusted by lifting either pedal over the spring-loaded ratchet mechanism provided on each arm of the pedal. A stop bracket fitted at the forward end of the pilot's floor limits the travel of the pedals. For further information, refer to Section 7, Chapter 4, paragraphs 3 to 6, and Fig. 5 respectively.

Ailerons Control

37. The ailerons are controlled by rotation of the spectacle type hand wheel on the control column. Travel limit stops for the aileron control are mounted on the starboard side of the rocker lever. An installation diagram is described and shown in Section 7, Chapter 4, paragraph 4 and Fig. 1 respectively.

Elevators Control

38. The elevators are controlled by a fore-and-aft movement of the control column. See also Section 7, Chapter 4, paragraph 5, Fig. 4.

Trimming Controls

39. The rudder, elevator and aileron trimming tabs are operated from the trimming tabs control box mounted at the right of the pilot's seat, an indicator for each being provided close by. For operation of these controls, refer to Section 7, Chapter 4, paragraphs 7 to 11 and Fig. 9 respectively.

TABS

Balance Tab Elevator

40. The balance tabs on the elevators are operated in conjunction with the elevators. When the elevator is moved the tab is automatically moved in the opposite direction.

Aileron Balance Tab

41. A balance tab is fitted to each aileron (see Section 7, Chapter 2, Fig. 6), and is connected to the aileron hinge arm by a rod and lever on the upper surface of the tab. Six holes are provided in this lever to allow for adjustments.

FLYING CONTROLS LOCKING GEAR

42. The controls locking gear is stowed on the starboard side of the fuselage between the mainplane spars. For the method of locking the flying controls, refer to Section 4, Chapter 2, paragraph 8 and Fig. 3 respectively.

RADIO

43. For detailed information of the radio installation and operation, reference should be made to Section 10, Chapter 2.

44. The following radio controls are installed for use by the pilot: A remote control unit, isolation switch, navigator's telephone, volume control for TR.5043 and distress switch are provided on the auxiliary panel at the left of the pilot's seat.

45. A press-to-transmit switch is provided on the left-hand side of the control hand wheel.

Intercommunication

46. Complete intercommunication is provided between all members of the crew by means of the A.1134 amplifier; the microtelephone socket for this is located on the auxiliary panel.

47. The navigator's Mic.-Tel. may be isolated from the circuit by means of an isolation switch mounted on the navigator's panel, but if communication is required with the navigator it may be used from a switch provided on the pilot's auxiliary panel.

SEATS, DOOR AND WINDOWS

Pilot's Seat

48. The pilot's seat is mounted on a raised floor on the port side of the cockpit, has hinged armrests and is adjustable for height by movement of a lever on the left-hand side; the safety harness is released by a lever on the right armrest. Armour plate, including a hinged panel behind the pilot's head, is fitted to the back of the seat.

Second Pilot's Seat

49. The second pilot's seat is a welded tubular structure supported on a tubular bearer between the formers D and B on the starboard side of the cockpit; it is held in horizontal position by two bracing struts welded together, and at the lower end a quick-release lever is provided and fits over a tubular bearer attached to the pilot's floor.

Direct Vision Windows

50. On each side of the pilot's windscreen are direct vision windows for use if the windscreen is obscured. The windows open inward; to open, rotate the knob counter-clockwise, press down and pull the handle inward.

Door

51. The main entry and exit door is situated on the starboard side of the aircraft, between formers 30 and 32, and is used by all members of the crew.

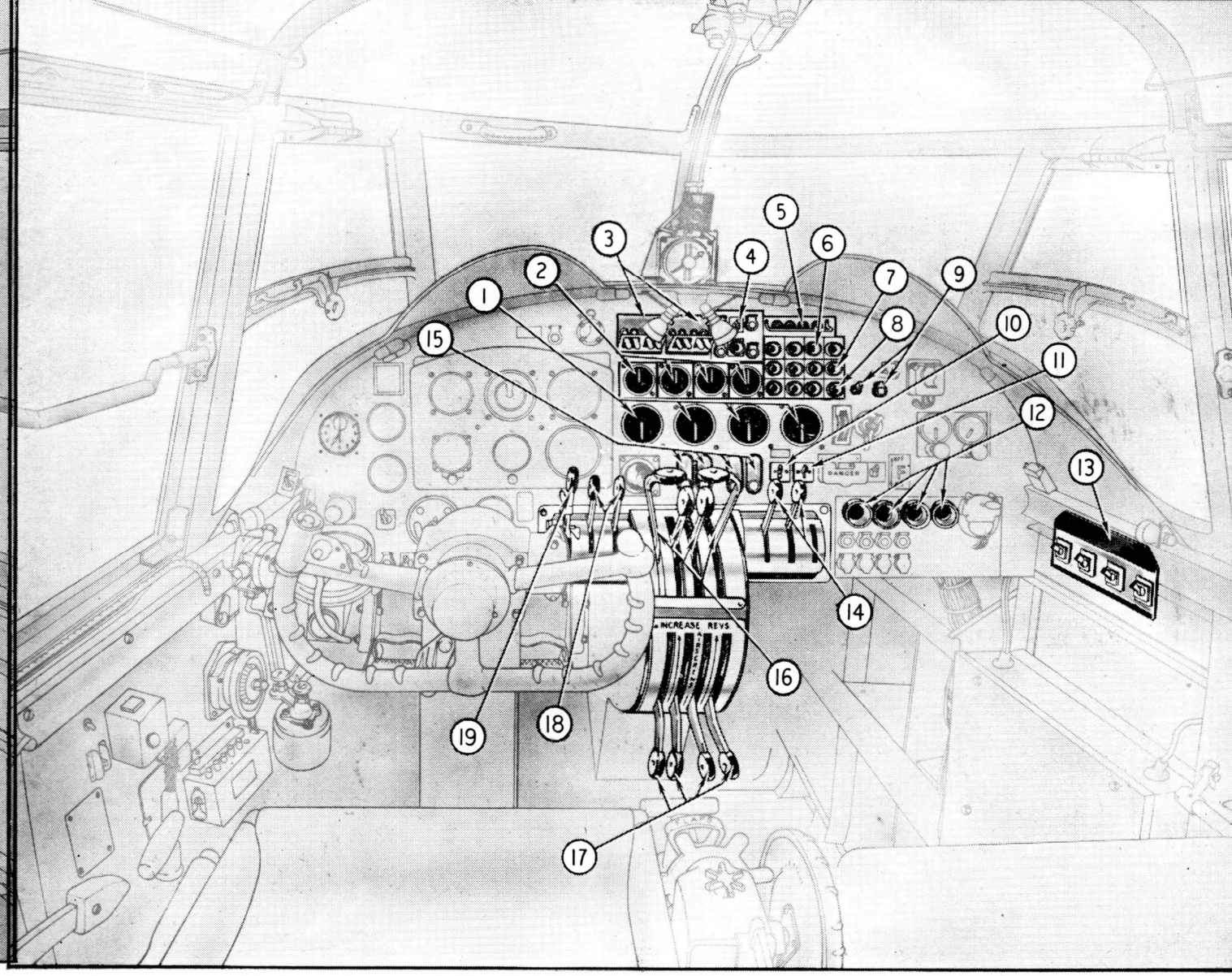

Starting, running and stopping

Engine speed indicators (4) ... 1

Boost gauges (4) 2

Ignition switches (8) 3

Two sets of 4, switches of each set operate independently, or in unison by using bridge plate.

Supercharger M.S.-AUTO switch, warning lamps (4) **and test push-button** 4

Electro-pneumatically controlled —— ——— not operative if air pressure is below 160 lb. per sq. in.
Switch up — M.S.
Switch down — AUTO (F.S. gear automatically engaged by altitude switch at pre-determined height).
Warning lamp — red when F.S. gear engaged.
Test push-button — press to short altitude switch for ground testing.

Slow-running cut-off switches (4) **protected by guard rail**... ... 5

Not operative if air pressure is below 160 lb. per sq. in.
Switch down — IDLE CUT-OFF — for starting, stopping and parking.
Switch up — ENGINE ON — when engines running smoothly.

Fuel

Engine priming push-buttons (4) 8

Carburettors primed by switching on electric fuel pumps.

Priming master switch and warning lamp 9

Master fuel cocks, starboard (2) 14

Lever up — ON.
Lever down — OFF.

Master fuel cocks, port (2) ... 18

Lever up — ON.
Lever down — OFF.

Starting push-buttons (4) ... 6

Booster coil push-buttons (4)... 7

Oil pressure gauges (4)... ... 15

Throttle control levers (4) ... 16

Stop provided in each gate, full movement gives maximum boost.
Friction adjuster on R.H. side of quadrant.

Boost cut-out control 19

Inoperative on Lincoln Mk. 30 aircraft.

Propellers

Feathering push-buttons (4) ... 12

Propeller control levers (4) ... 17

Levers up — INCREASE REVS.
Levers down — DECREASE REVS.
Friction adjuster on L.H. side of quadrant.

Miscellaneous

Air cleaner switch 10

Not operative if air pressure is below 160 lb. per sq. in. Not operative unless undercarriage retracted. Switch up — Cleaners held "in" by spring-return pneumatic jacks. Switch down — Cleaners pushed "out".

Hot and cold air-intake switch... 11

Not operative if air pressure is below 160 lb. per sq. in. Electro-pneumatically controlled.

Radiator shutter control override switches (4) 13

Switches up — AUTOMATIC — for starting engines and for take-off.
Switches down — OPEN — for taxying only. Not operative if air pressure is below 160 lb. per sq. in.

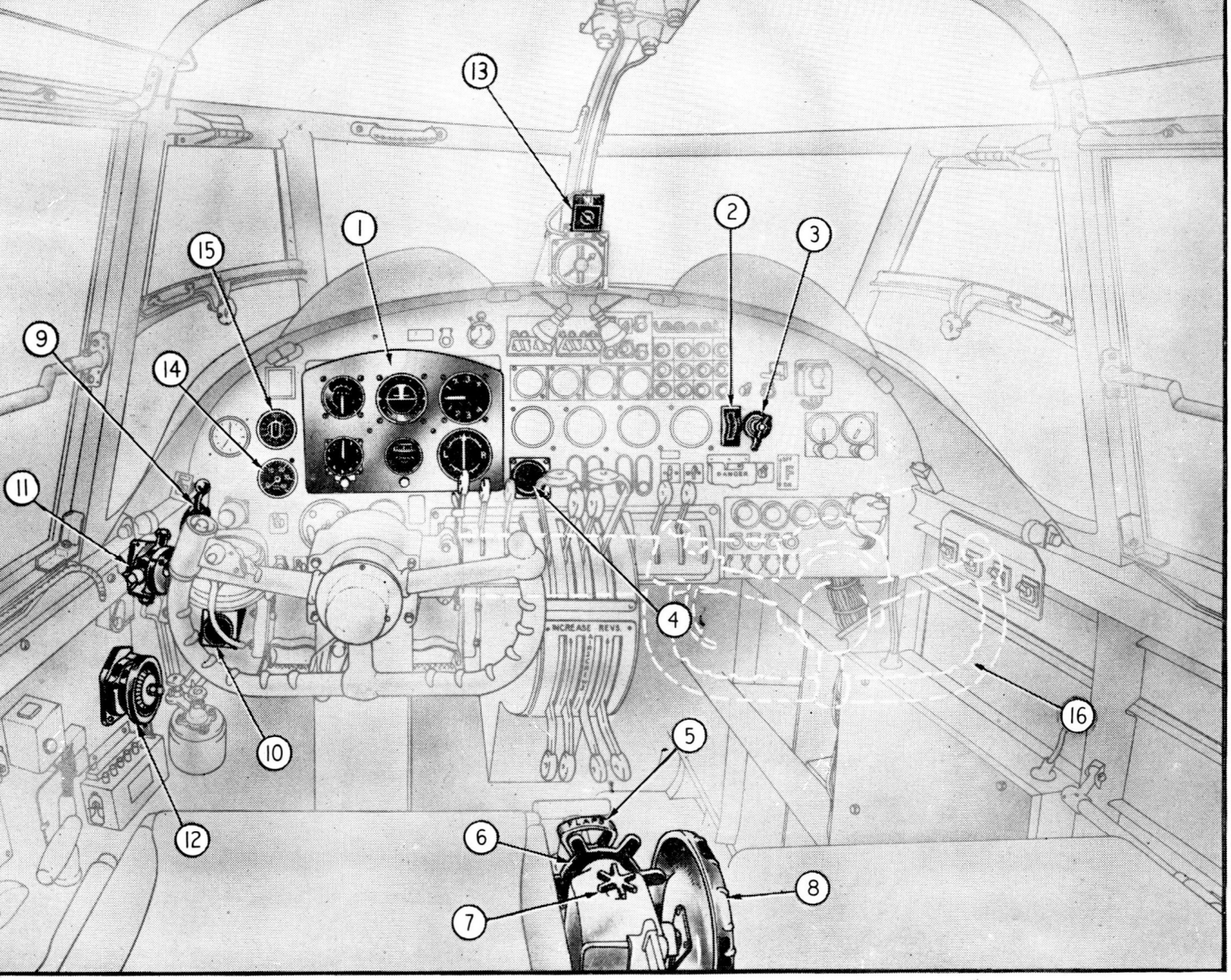

Flying controls

Aileron trimming tab control handwheel **6**

Operate in natural sense. Nearby indicator shows tab position.

Rudder trimming tab control handwheel **7**

Operate in natural sense. Nearby indicator shows tab position.

Elevator trimming tab control handwheel **8**

Operate in natural sense. Nearby indicator shows tab position.

Automatic pilot, Mk. VIII

Clutch lever **9**

Air pressure and trim gauge ... **10**

Cock **11**

A stop prevents movement of cock control to OUT — with this installation gyro unit is always on.

Azimuth control **12**

Selector switch **13**

Lever to left — JINK
Lever vertical — OFF.
Lever to right — COURSE.

Flaps

Flaps position indicator... ... **4**

Flaps control handle **5**

Operate in natural sense. A spring-loaded catch indicates neutral position, to which handle must be returned as soon as position indicator shows desired setting. No indicator switch.

Miscellaneous

Instrument-flying panel **1**

Suction gauge **2**

Vacuum change-over switch ... **3**

NORMAL — Single pump connected to instrument-flying panel, other two pumps to bomb sight and computor, with branch to special equipment when fitted.
EMERGENCY — Connections reversed.

Dual control handwheel... ... **16**

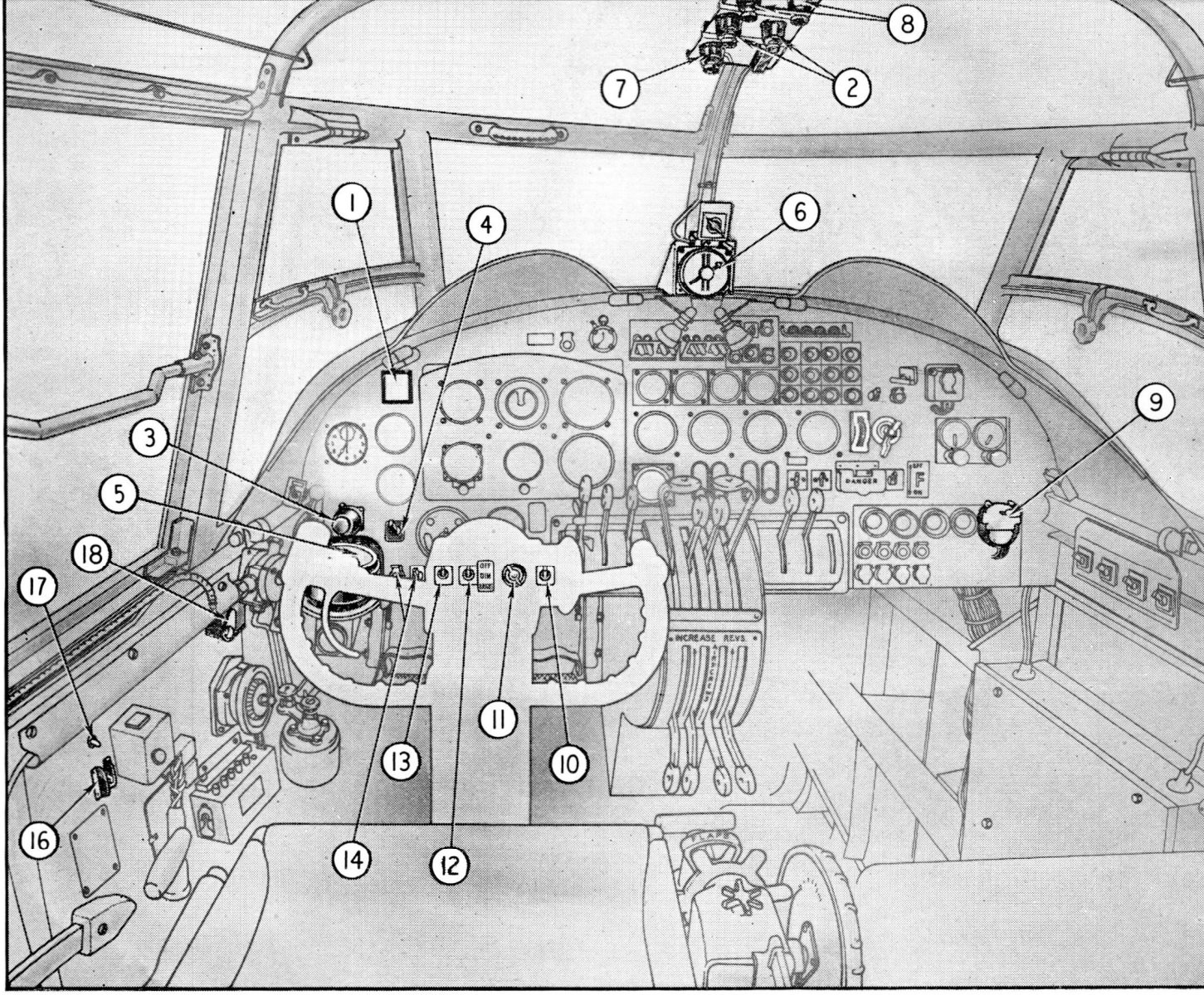

Navigational

A.S.I. correction card holder... 1

Magnetic compass lamp switch 3

Magnetic compass 5

D.R. compass repeater 6

Navigation lamps switch ... 12
Up — OFF. Middle — DIM. Down —BRIGHT. Master switch (14) must be ON.

Isolation switch for navigator's telephone 17

Signalling

Downward identification lamp colour selection switch 4
Up — RED. Middle — GREEN. Down — AMBER.

Signalling switchbox 9
R.H. switch not connected.

Resin lamps OFF-ON switch... 13
Master switch (14) must be ON. Colour selection switch on panel on starboard side forward of front spar.

Distress switch 16

Call lamp and push-button ... 18

Lighting

U.V. lighting, switches 2

Repeater compass lamp switch 7

Cockpit floodlight switches (2) 8

Glider tow tail lamp switch ... 10

Landing lamps switch 11
Left — Lamps OFF and retracted.
Vertical — LOW. Lamps on and beam dipped.
Right — HIGH. Normal beam.
Master switch (14) must be ON.

External lamps, warning lamp and master switch 14
Operation of master switch to OFF extinguishes all external lights.

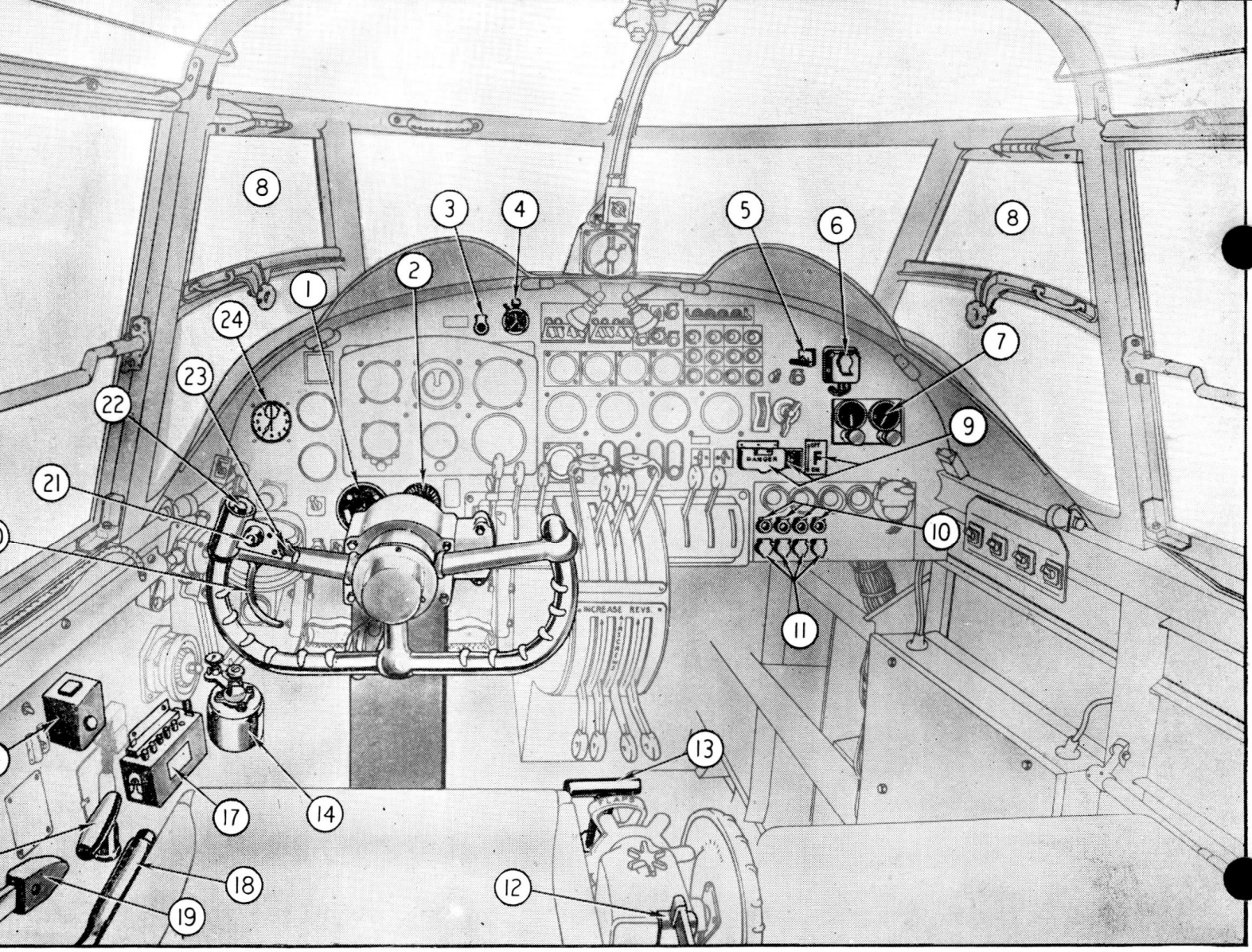

Operational

Camera warning lamp **3**

Glider release handle **13**

Bomb door lever **19**
Lever up — doors closed.
Lever down — doors open. Bomb release system inoperative until doors partly open.
To open bomb doors by hand pump for bombing up requires fifteen minutes strenuous pumping and it is recommended that doors are opened by pilot before switching off engines.

Bomb release button **22**
Operation releases single bomb or sticks of bombs fuzed and selected by air bomber.

Alighting gear

Alighting gear position indicator **1**
Indicator becomes operative when GROUND/FLIGHT switch turned to FLIGHT.
Two green lights — locked DOWN. Two red lights — unlocked. No light — locked UP. A warning horn sounds if either inboard throttle closed unless undercarriage is locked DOWN.

Alighting gear control lever ... **12**
Operate in natural sense. Spring-loaded safety bolt must be held out while lever raised; re-engagement automatic when lever pushed down.

Brakes

Brakes lever **20**

Brakes lever parking catch ... **23**

Emergency

Bomb jettison handle **5**
To jettison bombs, pull handle.

Containers jettison push-button (shielded) **6**
Jettison containers before jettisoning bombs.

Destructor OFF-ON switch and push-buttons (buttons shielded) **9**

Fire warning lamps (4) ... **10**

Fire extinguisher push-buttons (4) (shielded) **11**

Fuel jettison handle **16**

Miscellaneous

Triple air-pressure gauge ... **2**

Watch holder **4**

Oxygen flow and contents gauges **7**

Direct-vision windows **8**
To open, rotate knob counter-clockwise, and pull down; pull handle inwards.

Windscreen de-icing pump ... **14**

Volume controller **15**

Transmitter-receiver controller **17**

Seat-adjusting lever **18**

Press-to-transmit push-button ... **21**

Time clock **24**

Section 2

Emergency Controls, Equipment & Exits

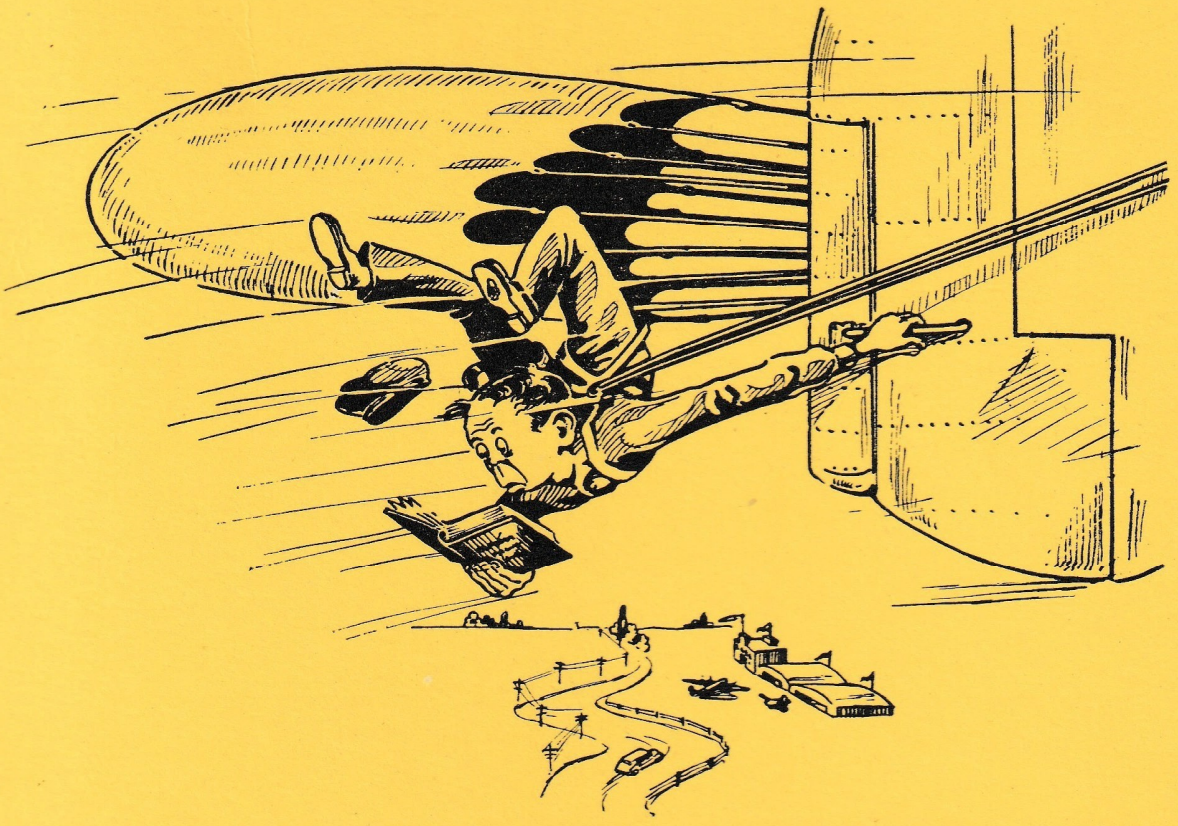

THE MAIN ENTRANCE DOOR MAY BE USED AS A PARACHUTE EXIT ONLY IN CASES OF EXTREME EMERGENCY.

AUSTRALIAN AIRCRAFT RESTORATION GROUP
BOX 1256 G.P.O. MELB. 3001

SECTION 2

Emergency Controls, Equipment and Exits

CONTENTS

	Para.		Para.
GENERAL	1	STATIC LINE, STOWAGE	18
EMERGENCY CONTROLS, PILOT'S PANEL	2	AIR/SEA RESCUE EQUIPMENT TYPE "Q" DINGHY	19
UNDERCARRIAGE AND FLAPS OPERATION	3	TYPE "K" DINGHY	22
FUEL JETTISONING	6	PORTABLE OXYGEN BOTTLES	23
BOMB JETTISONING	8	EXITS IN ROOF	24
COOLANT SYSTEM	9	FIREMAN'S AXES	25
RADIATOR SHUTTERS OPERATION ...	10	ASBESTOS GLOVES	26
AUTOMATIC FIRE EXTINGUISHERS ...	11	FIRST AID OUTFIT	27
HAND FIRE EXTINGUISHERS	14	SIGNAL PISTOL	28
RADIO DEMOLITION SWITCHES... ...	15	CARTRIDGE STOWAGE	29
PARACHUTES AND PARACHUTE EXITS	16		

ILLUSTRATIONS

	Fig.		Fig.
General Emergency Equipment and Exits	1	Folding "Q" Type Dinghy	5
Fire Extinguisher System	2	"Q" Type Dinghy Stowing Instructions ...	6
Dinghy Installation	3	"Q" Type Dinghy Emergency Equipment Container	7
Stowing and Packing of "Q" Type Dinghy...	4		

Emergency Controls, Equipment and Exits

General

1. The emergency equipment and exits are illustrated in Fig. 1, and further details of the automatic fire extinguishers and dinghy inflation equipment are shown in Figs. 2 and 3 respectively. The ribs and formers referred to in the following paragraphs may be located by referring to Section 4, Chapter 3, Fig. 5.

EMERGENCY CONTROLS, PILOT'S PANEL

2. The following emergency controls are located on the right-hand side of the pilot's instrument panel:—

(i) Bomb jettison control handle.
(ii) Bomb container, jettison control.
(iii) I.F.F. demolition push buttons.
(iv) Fire warning lamps.
(v) Fire extinguisher push buttons.

UNDERCARRIAGE AND FLAPS OPERATION

3. A compressed air system is provided for emergency operation of the undercarriage and flaps if the hydraulic system fails. The control valve is operated by a remote control knob just forward of the engineer's instrument panel. When this emergency control is operated, the undercarriage main wheel units are lowered, irrespective of the position of the normal hydraulic control lever; but the lever should be placed, and left, in the DOWN position for and after landing, otherwise loss of air pressure may cause the undercarriage locks to be released and the undercarriage to collapse.

4. Operation of the emergency air control also admits compressed air to the flaps control valve, and after the main wheels have been lowered the flaps may be lowered by selecting FLAPS DOWN in the normal manner.

5. It is possible to raise the flaps after lowering them by the emergency method, but it is not advisable to do this, as there may not be sufficient air pressure to re-lower them. If it is essential to raise the flaps, great care must be taken to operate them in stages.

FUEL JETTISONING

6. The contents of both No. 1 fuel tanks may be jettisoned by lifting, and turning anticlockwise the hydraulic control handle at the left of the pilot's seat. Speed should be reduced to 150 m.p.h. I.A.S. and the flaps lowered 15 deg. before jettisoning. It is recommended that the valve should be closed while there is still between 75 and 100 gallons in each tank, as the remainder of the jettisonable fuel runs out more slowly and may get splashed over the fuselage, with consequent danger of fire.

7. The jettison system must not be operated unless the pressure shown on the gauge of the hydraulic accumulator exceeds 650 lbs./sq. in. When the flaps are lowered prior to jettisoning, the accumulator pressure should build up rapidly to 650-850 lbs./sq. in. If, however, a lower pressure is indicated, one of the main hydraulic systems should be operated momentarily, *e.g.*, the bomb door operating lever should be moved to OPEN and then returned at once to CLOSED. This will cause the automatic cut-out to function and the hydraulic pumps to build up the pressure in the system. In this case, to ensure the most efficient operation of the jettison system, the control valve should be opened as the rising pressure passes 650 lbs./sq. in., and a member of the crew should watch the gauge and signal the pilot at this moment. If the pressure fails to build up, jettisoning should not be attempted.

BOMB JETTISONING

8. The complete bomb load (excluding bomb containers) may be jettisoned (after the bomb doors have been opened), by means of the manual jettison handle on the right side of the pilot's instrument panel. If bomb containers are carried, they should be jettisoned first, using the bomb container jettison switch to the right of the bomb jettison handle.

COOLANT SYSTEM

9. Provision is made for the isolation of the cabin heating radiator in the fuselage rear centre section to prevent loss of coolant

from the port inboard engine if the fuselage section of the cabin heating installation is damaged. Two stop cocks for this purpose are fitted near the fuselage floor just forward of the rear spar.

RADIATOR SHUTTERS OPERATION

10. If failure of the thermostatic switches prevents automatic opening of the radiator shutters, causing consequent overheating, the shutters can be opened by means of the override switches situated on the starboard side of the cockpit. (See Section 1, Fig. 1.)

AUTOMATIC FIRE EXTINGUISHERS

11. Eight Graviner automatic fire extinguishers are fitted, two for each engine (see Fig. 2). In each inboard nacelle the extinguishers are mounted on the rear face of the front spar in the undercarriage compartment; in the outboard nacelles an extinguisher is attached to each side of the engine sub-frame. Flexible delivery pipes are led forward from the extinguisher bottles through the firewalls, one leading to the carburettor air intake on each power plant, and the other to the spray pipes. (See A.P.2861A, Vol. I.)

12. Six flame switches, connected to one of the four warning lamps incorporated in the feathering push buttons on the pilot's panel, are provided in each power plant. In the event of a fire, the operation of a flame switch causes the warning lamp to light, at the same time making connection between the fire extinguisher circuit and a circuit from the feathering push button. When a warning lamp lights, the appropriate feathering button should be operated as soon as is practicable. This also closes the fire extinguisher circuit, which operates the bottle to the carburettor air intake immediately. A delay action switch causes the spray pipe extinguisher to operate after a delay of 15 seconds. In early aircraft the flame switches operate separate warning lamps on the pilot's panel, when the appropriate fire extinguisher button must be depressed to operate the system.

13. If it is required to use the fire extinguisher without feathering, there are four push buttons mounted on the instrument panel below the propeller feathering push buttons. In the event of a crash, the extinguishers are operated automatically by an inertia switch on the starboard side of the floor of the fuselage nose.

HAND FIRE EXTINGUISHERS

14. Six portable extinguishers are provided in the fuselage, stowed in the following positions:—

(i) On the starboard side of the nose, between formers G and H;
(ii) on the port cockpit rail, just forward of former B;
(iii) on the forward face of a panel at the forward end of the navigator's table;
(iv) on the starboard side just forward of the front spar;
(v) on the starboard side aft of the main floor (under defence station);
(vi) on the port side, just forward of the tail turret.

RADIO DEMOLITION SWITCHES

15. The I.F.F. emergency push buttons are on the right-hand side of the pilot's instrument panel.

PARACHUTES AND PARACHUTE EXITS

16. Exit by parachute should be made from the hatch in the floor of the nose by all members of the crew, if time is available. The hatch, which is released by turning the handle at the centre, is lifted inwards and jettisoned. The main entrance door may be used as a parachute exit only in extreme emergency.

17. The following parachute stowages are provided:—

(i) On the rear face of the draught-proof bulkhead behind the nose turret;
(ii) on the stowage panel at the forward end of the navigator's table;
(iii) on the starboard side of the fuselage, just forward of the mainplane rear spar;
(iv) on the port side of the fuselage, just forward of the dorsal turret;
(v) on the starboard side of the fuselage, just aft of the dorsal turret, between formers 25 and 26;
(vi) on the starboard side of the fuselage, between formers 39 and 40, just forward of the tail turret.

STATIC LINE, STOWAGE

18. A static line for parachuting wounded men is provided, and stowed at the rear—slightly below the bomb aimer's seat, between formers H and J.

AIR/SEA RESCUE EQUIPMENT

Type "Q" Dinghy

19. A type "Q" dinghy for the crew is stowed in a blow-out compartment in the starboard trailing edge of the centre plane (see Fig. 3). Two methods of operation are provided:—

(i) An immersion switch on the starboard side inside the nose of the fuselage at former G, which automatically releases the dinghy on contact with salt water.

(ii) A manual release cord, which runs through separate lengths of tube between formers 13 and 35, and is operated by pulling down a loop between any two tubes or by an external loop at former 34.

20. The following emergency equipment is stowed in the dinghy:—

Emergency equipment container, emergency rations, water, dinghy radio, sails, mast and rudder, paddles, bellows, painter and a weather apron, integral with the dinghy.

The contents of the emergency equipment container are described in Fig. 7. The placing, folding and stowing instructions for the dinghy are shown and described in Figs. 4, 5 and 6, at the end of this section.

21. The dinghy stowage (see Fig. 3) consists of a box between trailing section ribs 29 and 31, the webs of the ribs forming the sides. The ends are light-alloy panels with top-hat section stiffeners, and the bottom is formed from a flat panel strengthened by a corrugated panel beneath. The lid, which contains an inspection window over the operating head, is secured by a rubber angle strip. This strip is attached to the frame forming the top edge of the stowage, and fits into a built-up channel on the edge of the lid, permitting the latter to be forced off by the expansion of the dinghy when inflated. Carbon dioxide for inflation is contained in a bottle attached to the dinghy, but supported on two cradles whilst in the stowage. The dinghy is secured to the outer of the two cradles by a painter attached by a clove hitch to the dinghy hand line.

Type "K" Dinghies

22. Stowages are provided for seven type "K" dinghies, mounted in the following positions:—

(i) Rear of the parachute stowage, between formers 40 and 41;

(ii) on the back of the armour plate attached to the pilot's seat;

(iii) on the bulkhead door rear of the front turret, in line with the parachute;

(iv) two beside the parachute stowage on the starboard side aft of the dorsal turret;

(v) above the parachute stowage, just forward of the rear spar;

(vi) on the starboard side, rear of the rear spar, above the cabin heating control.

PORTABLE OXYGEN BOTTLES

23. Seven portable oxygen bottles are stowed in wire mesh containers at the following positions:—

(i) Under the starboard side decking of the nose turret installation;

(ii) on the back of the pilot's seat;

(iii) one on the lower end of each of the two vertical stays just forward of the astro-dome;

(iv) on the starboard side of the fuselage, just forward of the rear spar;

(v) on the face of the bulkhead at the rear end of the bomb compartment;

(vi) on the starboard side of the fuselage, just forward of the tail turret, between formers 38 and 39.

EXITS IN ROOF

24. Two "push-out" type emergency exits are provided in the roof of the fuselage, one in the canopy above the pilot and the other just forward of the rear spar. These should not be used as parachute exits.

FIREMAN'S AXES

25. Stowages are provided on the starboard side of the fuselage for two fireman's axes, one just forward of the rear spar and the other just forward of the main door.

ASBESTOS GLOVES

26. A stowage for asbestos gloves is provided just above the axe forward of the rear spar.

FIRST AID OUTFIT

27. A first aid outfit is stowed on the starboard side of the fuselage, aft of the main exit door. In case of emergency, where it is impossible to obtain the outfit from inside the aircraft, a pull-out panel is provided. This is identified by the words FIRST AID painted in black, and PULL painted in red on the surface of the skin just aft of the main door.

SIGNAL PISTOL

28. A signal pistol is stowed in its upward position in the roof of the fuselage just rear of the astrodome.

Cartridge Stowage

29. The cartridges for the signal pistol are stowed in spring clips on the starboard side near the upward firing position.

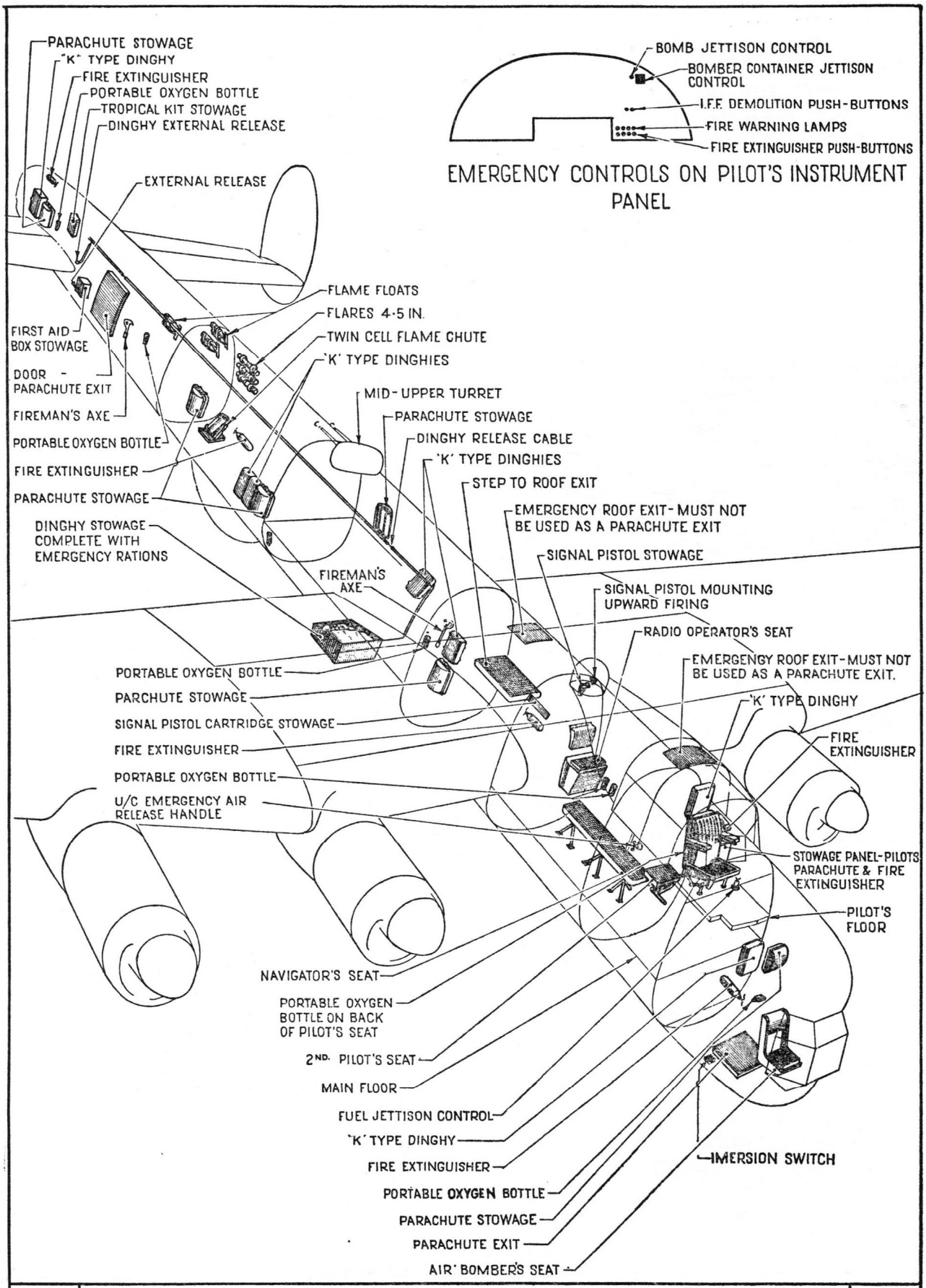

1	GENERAL EMERGENCY EQUIPMENT & EXITS	1

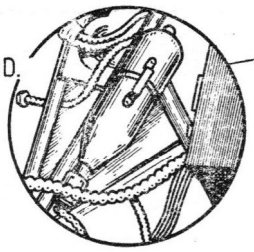

FLAME SWITCHES AND FIRE EXTINGUISHER PIPES AND BOTTLES AT STARBOARD OUTBOARD ENGINE ARE IDENTICAL WITH THOSE SHOWN AT PORT OUTBOARD ENGINE.

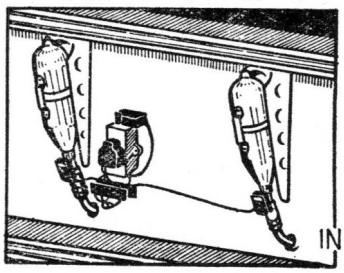

MOUNTING OF EXTINGUISHER BOTTLES.

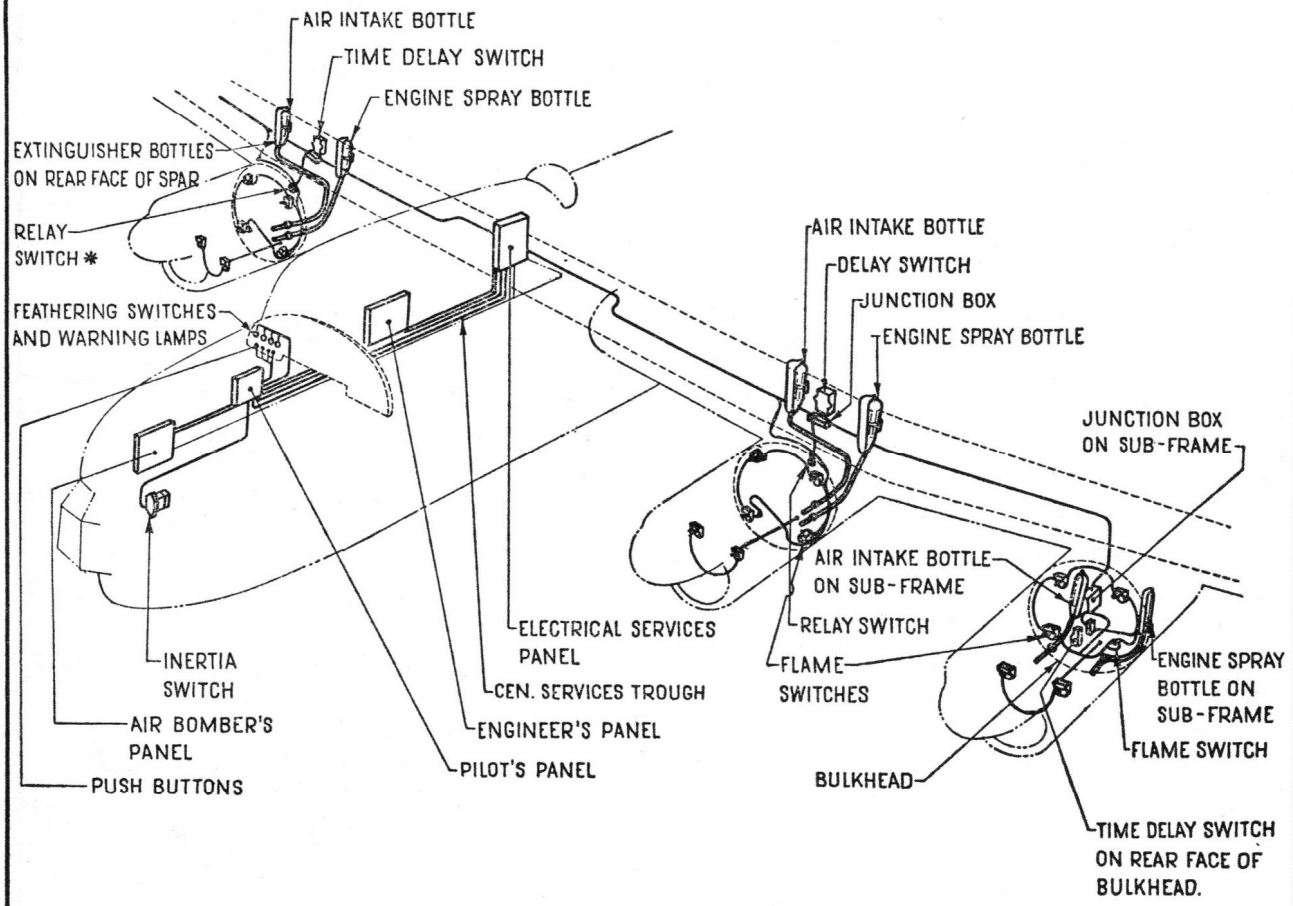

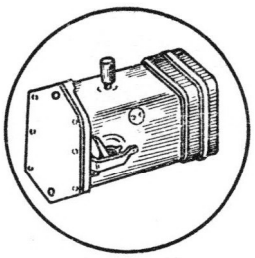

INERTIA SWITCH

* INCORPORATED IN LATER A/C ONLY

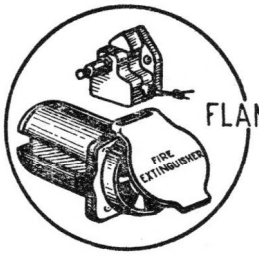

PUSH BUTTON.

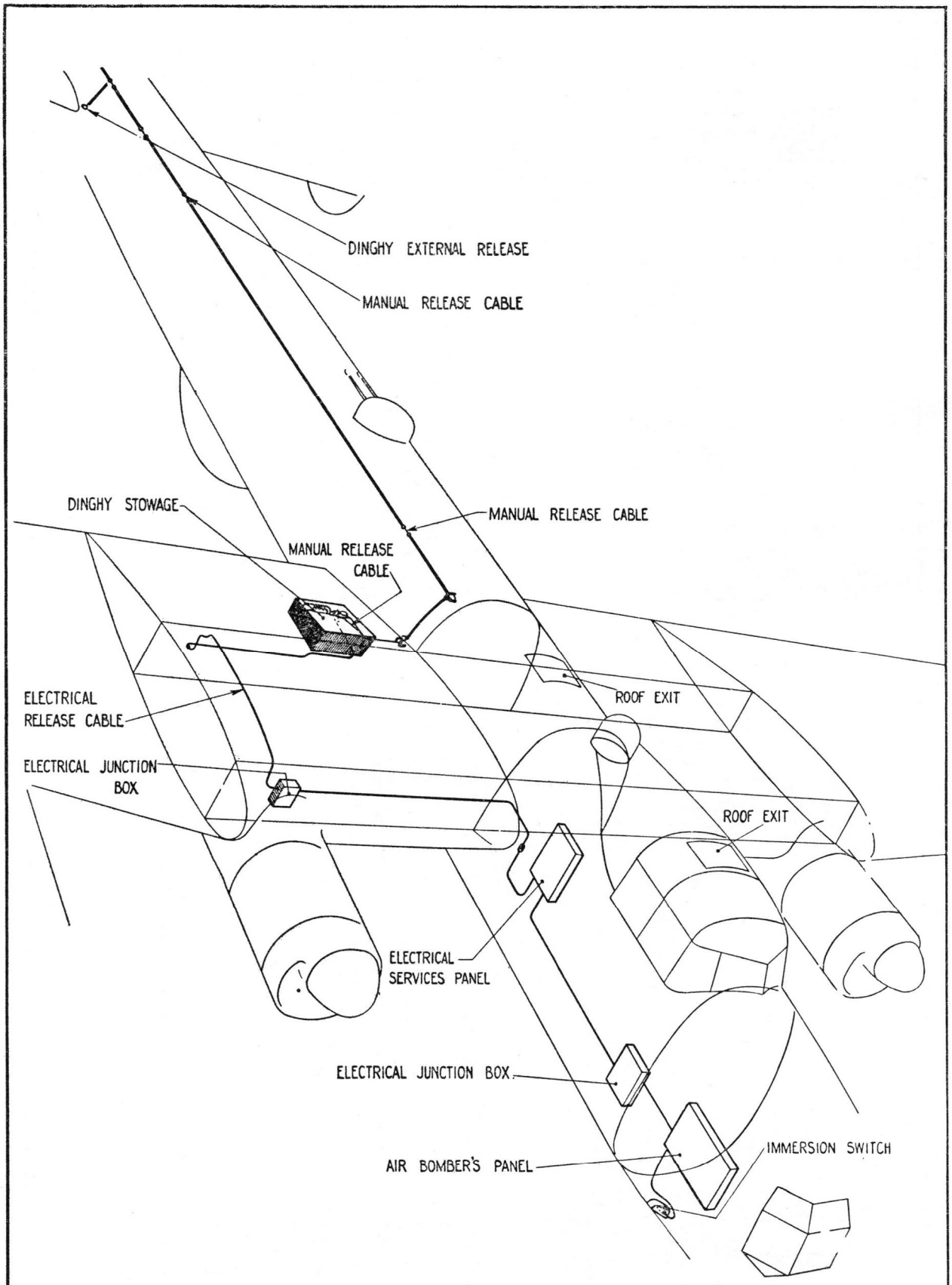

3	DINGHY INSTALLATION	3

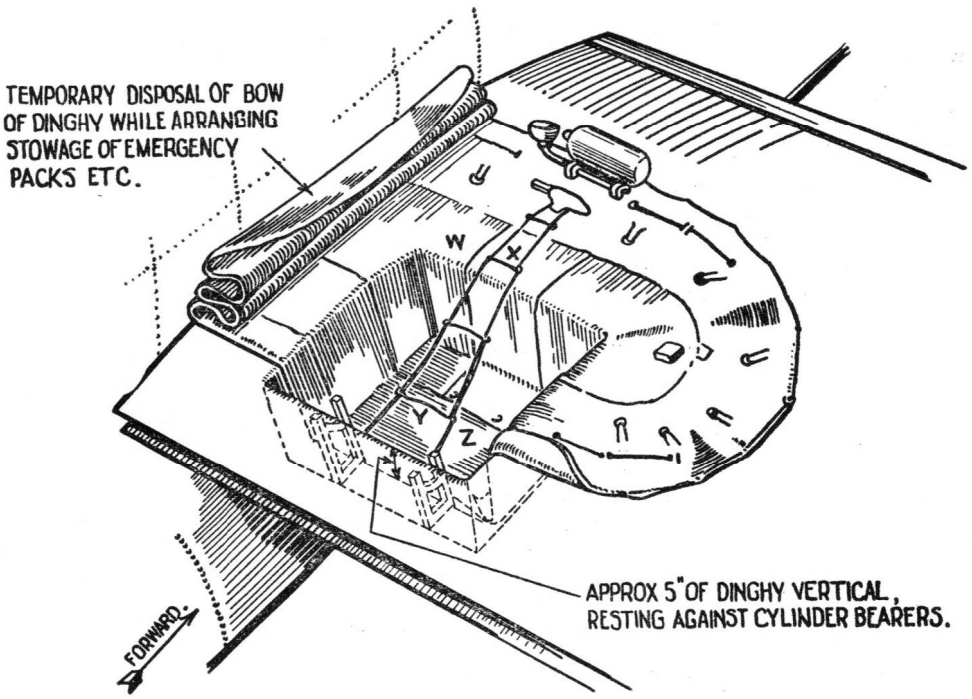

TEMPORARY DISPOSAL OF DINGHY BEFORE STOWING EQUIPMENT.

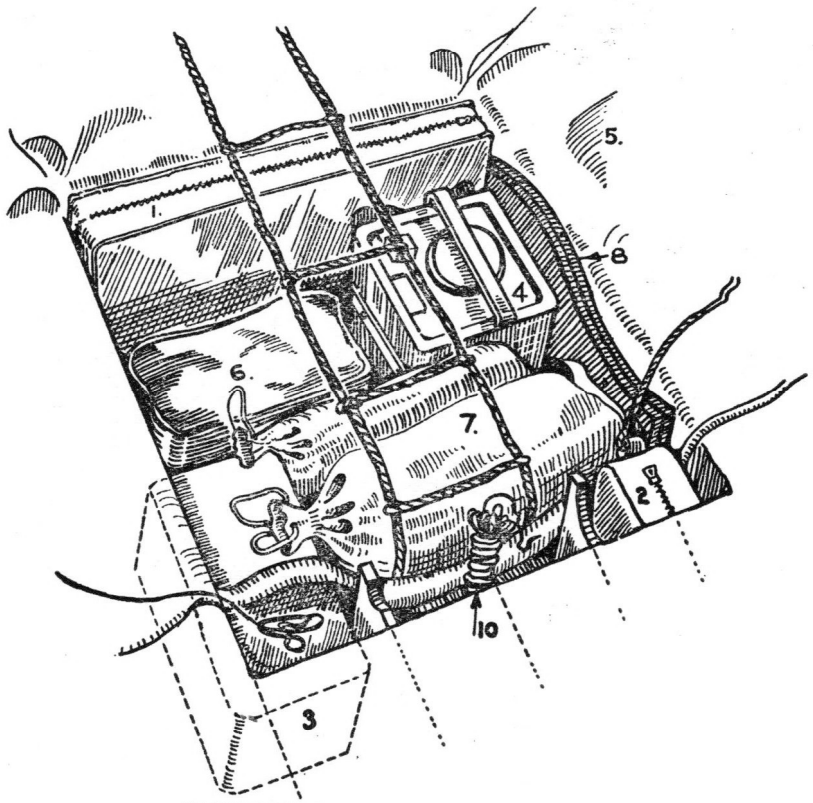

EMERGENCY EQUIPMENT STOWAGE.

1. EMERGENCY EQUIPMENT CONTAINER
2. RATIONS, EMERGENCY.
3. WATER, TINS OF.
4 DINGHY RADIO.
5. WEATHER APRON - INTEGRAL WITH DINGHY.
6. SAIL IN BAG.
7. MAST AND RUDDER IN BAG.
8. PADDLES 9. BELLOWS 10. PAINTER.

Q TYPE DINGHY

STOWING AND PACKING

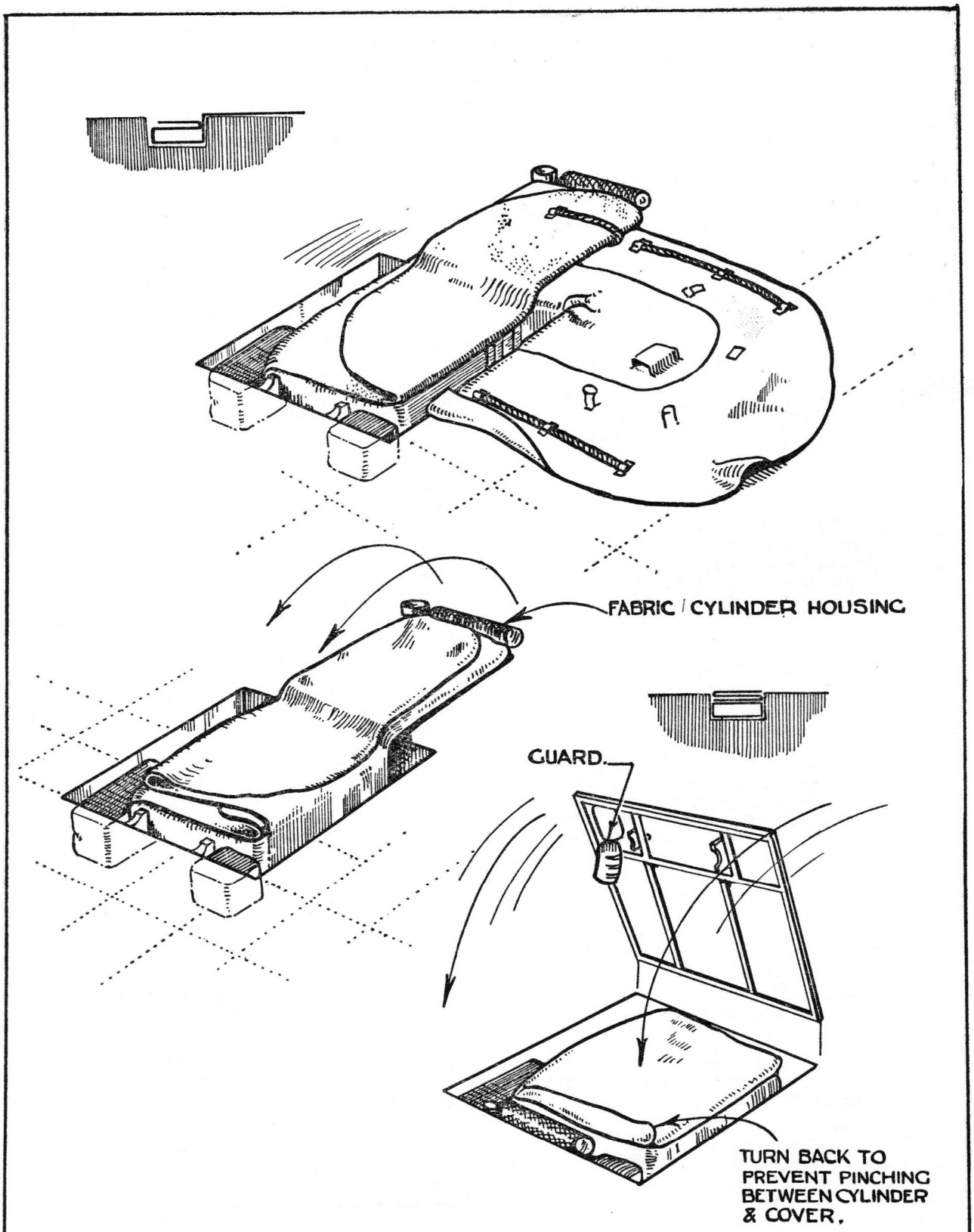

5	FOLDING 'Q' TYPE DINGHY	5

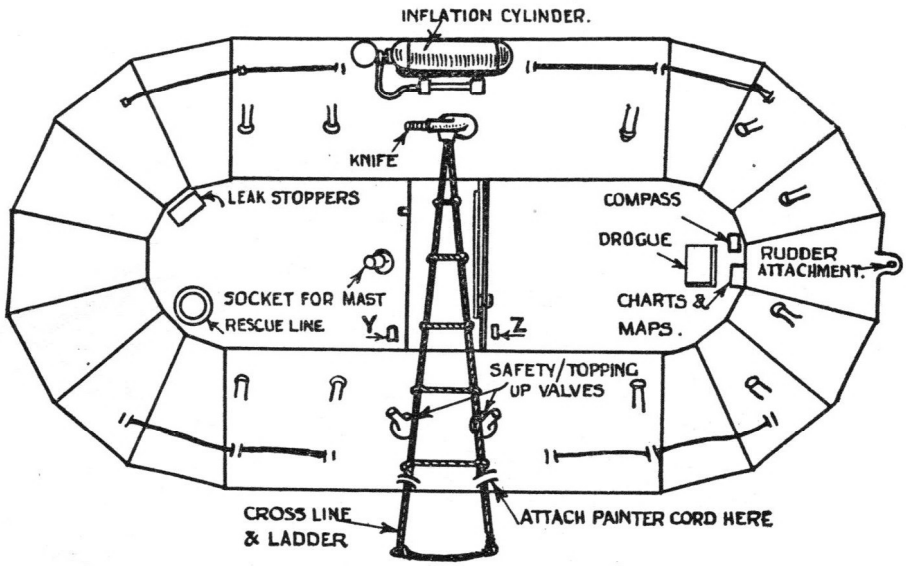

STOWING INSTRUCTIONS

1 LAY THE DINGHY, THOROUGHLY DEFLATED, ON WING SURFACE WITH INFLATION CYLINDER FORWARD AND LINED UP TO SUIT POSITION OF BEARERS. DEFLATE BY MEANS OF PUMP UNTIL ALL CREASES APPEAR AS KNIFE EDGES

2 CHECK THAT THE INFLATION PIPE IS CONNECTED TO THE CORRECT VALVE OF THE INFLATION MANIFOLD, I.E WITH THE OPERATING HEAD TOWARDS THE BOW OF THE DINGHY, AND TOWARDS THE INBOARD SIDE OF THE STOWAGE.

3 EASE THE DINGHY INTO THE STOWAGE AS INDICATED IN FIG. 4 LEAVING APPROXIMATELY 5 IN. OF THE DINGHY VERTICAL AGAINST THE CYLINDER BEARERS.

4 WITHDRAW DUST CAPS FROM SAFETY/TOPPING UP VALVES TO ENSURE PRESSURE RELIEF AFTER INFLATION.

5 LAY DINGHY PAINTER CORD ON STOWAGE FLOOR BETWEEN BEARERS, ONE END (AS LABELLED) TIED TO CYLINDER BEARER, THE OTHER END TIED TO DINGHY AT POSITION INDICATED ABOVE. CORD 20 FT LONG, 8 OZ F 32

6 PLACE RATIONS AND WATER IN SUSTENANCE CONTAINERS RESPECTIVELY AT FOOT AND HEAD OF CYLINDER AS SHOWN IN FIG 4

7 PLACE EMERGENCY CONTAINER SAILING GEAR BAGS, PADDLES, BELLOWS, WEATHER APRON (IF NOT INTEGRAL WITH DINGHY) & DINGHY RADIO IN POSITIONS SHOWN IN FIG 4 TAKING CARE THAT ALL ARE BELOW THE DINGHY LADDER. ATTACH THESE ITEMS TO DINGHY AT POSITIONS INDICATED IN NOTES IN FIG 7

8 COMPLETE FOLDS SHOWN IN FIG. 5 SO THAT CYLINDER HOUSING RESTS ON CYLINDER BEARERS IN STOWAGE.

9 LASH CYLINDER INTO ITS HOUSING ON THE DINGHY & PLACE ON BEARERS IN SUCH A WAY THAT CRUTCHES IN STOWAGE AND ON COVER REST ON FABRIC OF CYLINDER HOUSING AND *NOT* ON DINGHY ITSELF SEE FIG. 4 AND 5

10 CHECK BY TRIAL THAT STOWAGE COVER CAN BE CORRECTLY SEATED WITHOUT NECESSITY FOR MORE THAN 30 LBS. EXTERNAL PRESSURE TO ACHIEVE THIS IT MAY BE NECESSARY TO DISPLACE FOLDS LOCALLY IN ORDER TO ELIMINATE HIGH SPOTS

11 CONNECT INFLATION PIPE FROM DINGHY TO OPERATING HEAD OF INFLATION CYLINDER

12 CONNECT THE REMOTE MANUAL CABLE TO OPERATING HEAD, & ALIGN & LOCK OPERATING HEAD DRUM. IT SHOULD BE NOTED THAT A GUARD IS PROVIDED ON THE STOWAGE COVER TO SEPARATE OPERATING CABLE FROM DINGHY

13. REDUCE LENGTH OF ELECTRIC LEAD TO 8 IN. (MEASURED FROM TOP OF PLUG PINS TO POINT AT WHICH LEAD LEAVES SLEEVE ON OPERATING HEAD) BY HANKING & BINDING FIRMLY WITH INSULATING TAPE CONNECT PLUG INTO SOCKET

14 ENSURE THAT DINGHY IS CLEAR OF OPERATING CABLE, ASSEMBLE & FIX COVER BY MEANS OF SCREWS (SEE DETAIL) CHECK THAT GUARD ON COVER CORRECTLY SEPARATES DINGHY FROM CABLE BY REMOVAL OF INSPECTION WINDOW IF NECESSARY SEAL BY APPLYING ONE THIN COAT OF B2 OR CERRIC CLEAR NO. 03639 ADHESIVE ON SURFACE TO BE COVERED BY FABRIC STRIP. PLACE 3 IN FABRIC STRIP IN POSITION, & APPLY A FURTHER COAT OF ADHESIVE, ALLOW TO DRY, AND RE-CAMOUFLAGE

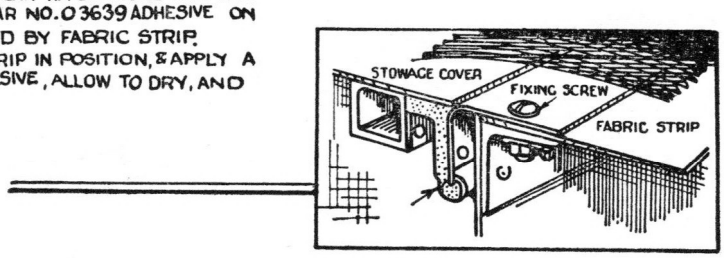

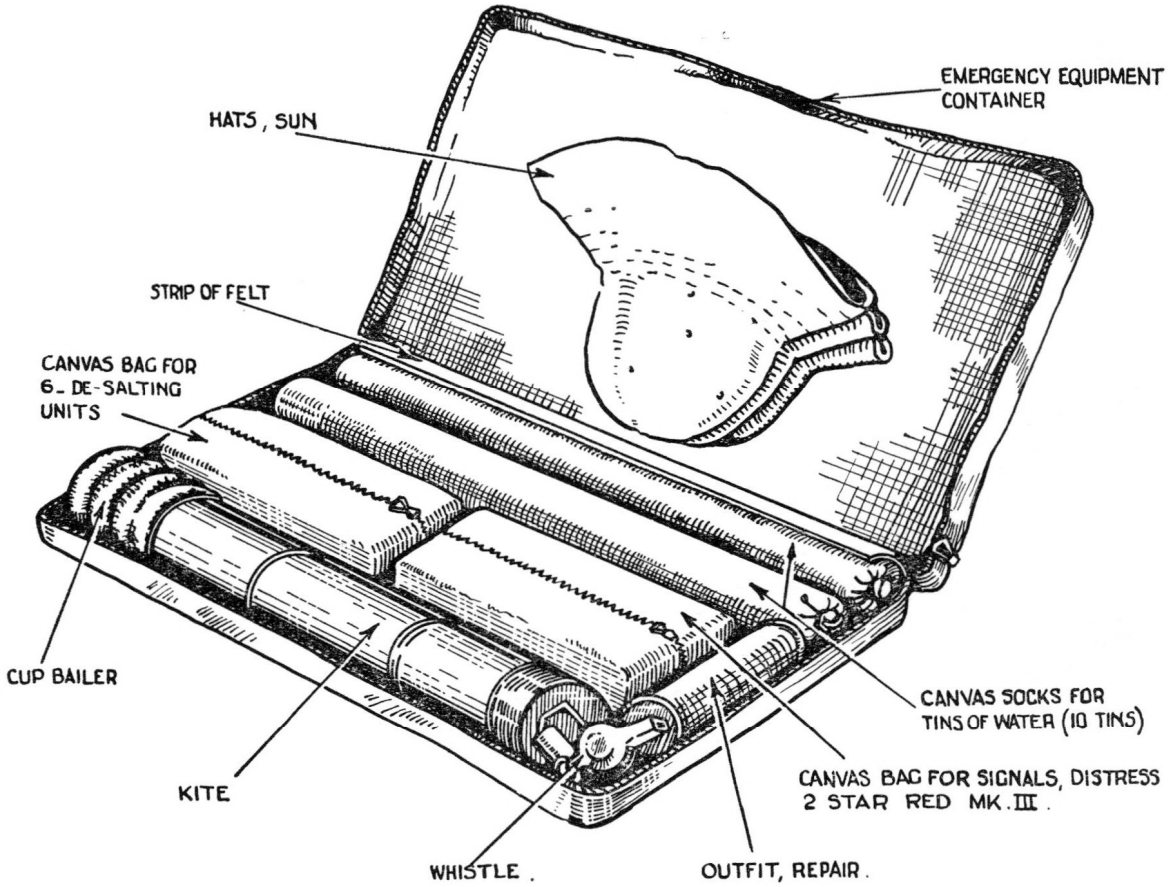

EMERGENCY EQUIPMENT CONTAINER

SECURING EQUIPMENT IN DINGHY

EMERGENCY EQUIPMENT CONTAINER CONNECTED TO PATCH 'Z' BY ITS OWN LANYARD

SUSTENANCE CONTAINERS FOR WATER & FOR EMERGENCY RATIONS CONNECTED TO PATCH 'Y' BY THEIR OWN LANYARDS.

DINGHY RADIO CONNECTED TO PATCH 'Z' BY 16 OZ CORD F 32

MAST & RUDDER IN CONTAINER CONNECTED BY TWO 16 OZ CORDS TO PATCHES 'Y' & 'Z' THESE PATCHES ARE SHOWN IN FIG 6

BELLOWS IN BAG ATTACHED TO CROSSLINE AT 'X' BY 2 FT LENGTH OF 16 OZ CORD, SO THAT BELLOWS CAN BE REMOVED WITHOUT CUTTING CORD

PADDLES ATTACHED TO DINGHY CROSSLINE AT 'X' BY 2FT OF CORD - 4 F 35

ALL CONNECTING CORDS MUST BE 12 IN LONGER THAN DISTANCE BETWEEN ATTACHMENT TO DINGHY AND ATTACHMENT TO ITEM, TO ALLOW FREEDOM OF MOVEMENT WHEN EMERGING.

CORDS MUST NOT LIE OVER ANY OF THE STOWED ITEMS

DINGHY CROSSLINE MUST LIE *OVER* ALL THE STOWED ITEMS

WEATHER APRON TO BE WRAPPED ROUND & LASHED TO SAIL-BAG UNLESS INTEGRAL WITH DINGHY

SAIL-BAG LASHED TO MAST & RUDDER CONTAINER AT POSITION SHOWN IN FIG 4

★ NOTE: IN CASES WHERE DINGHY IS NOT PROVIDED WITH PATCHES Y & 'Z', EMERGENCY EQUIPMENT CONTAINER & DINGHY RADIO ARE TO BE CONNECTED TO DINGHY CROSSLINE AT 'X', SUSTENANCE CON - -TAINERS AT 'W' AND MAST & RUDDER CONTAINER CONNECTED TO CROSSLINE AT 'W' & 'X'. SEE FIG. 4.

7	'Q' TYPE DINGHY EMERGENCY EQUIPMENT CONTAINER	7

Section 3

Controls & Equipment at Crew Stations

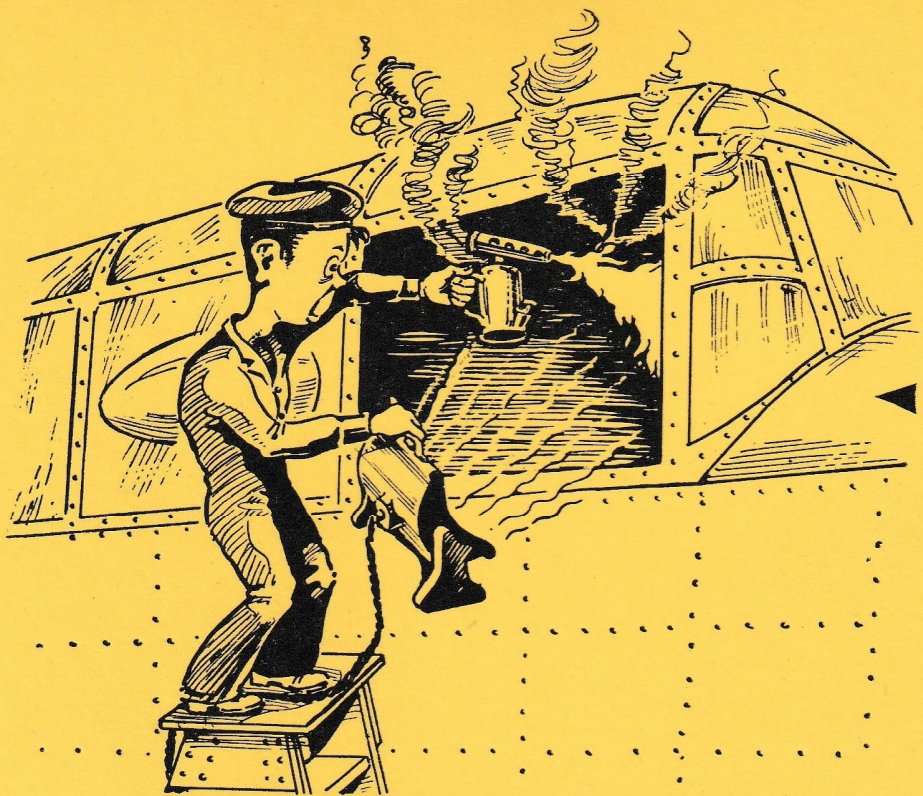

FOR INFORMATION CONCERNING COCKPIT HEATING AND DE-ICING AIR BOMBER'S WINDOW. SEE PARAGRAPHS 2-4 AND 18, RESPECTIVELY.

SECTION 3

Controls and Equipment at Crew Stations

CONTENTS

	Para.
INTRODUCTION	1
COCKPIT HEATING	2
OXYGEN EQUIPMENT	6
INTERCOMMUNICATION	7
HANDRAILS	8
ELECTRICAL SERVICES PANELS	9
NOSE —	
General	10
Camera Station	11
Air Bomber's Station	12
Air Bomber's Auto Control Panel	13
Air Bomber's Panel	14
De-icing for Air Bomber's Window	18
FRONT CENTRE SECTION —	
General	19
Flight Engineer's Station	20
Flight Engineer's Instrument Panel	21
Fuel Cross-feed Cock	23
Navigator's Station and Equipment	24
Radio Equipment	27
Navigator's Instrument Panel	28
Wireless Operator's Station and Equipment	29
INTERMEDIATE CENTRE SECTION —	
General	30
Forward Section	31
Rear Half of Section	33
REAR CENTRE SECTION —	
General	35
Port Side	36
Starboard Side	37
Flare Chutes	38
Flare Stowage	39
REAR SECTION —	
General	40
Port Side	41
Stowage for Tropical Kit	42
Starboard Side	43

ILLUSTRATIONS

	Fig.
Location of Equipment	1
Navigator's Instrument Panel	2
Flight Engineer's Panel	3

Controls and Equipment at Crew Stations

Introduction

1. The fuselage is divided, for purposes of description, in to five parts, *viz.*, nose, front, intermediate centre and rear centre sections, and rear fuselage. The layout of the controls and equipment is illustrated and referenced in Fig. 1, at the end of this section, and a key faces the illustration. Emergency equipment is included, but reference should be made to Section 2 for detailed information on this subject. A diagram showing rib and former positions will be found in Section 4, Chapter 3.

COCKPIT HEATING

2. Hot air is delivered from two radiators connected to the inboard engine cooling systems. One radiator, mounted in the leading edge of the starboard mainplane and connected to the starboard inboard engine, heats the cockpit and nose by means of a perforated duct on the starboard side. The other, mounted on the starboard side of the fuselage just aft of the rear spar, is connected to the port inboard engine, and delivers hot air through a duct on the starboard side to the dorsal and tail turrets and to the cupola of the scanner installation.

3. The delivery of hot air in the forward system is controlled by a knob situated behind a sliding door on the starboard side of the fuselage, just forward of the front spar. This knob operates a shutter in the air duct in the leading edge and, when turned anti-clockwise, opens the inlet to the cabin and closes the by-pass to the outer air. To assist the circulation of the air an adjustable extractor louvre is provided on the port side of the fuselage nose.

4. The rear system has a master control at the intake (see paragraph 2), similar to that described in paragraph 3, and individual controls at the following positions:—

(i) A rotary sleeve control at the junction with the duct to the scanner cupola;

(ii) a butterfly valve near the end of the duct to the tail turret. The control for this projects up through the walkway just forward of the turret.

5. As the two heating installations are separately controlled and the interior of the fuselage is divisible, at former 8, by a bulkhead and doors, either part of the fuselage, forward or aft of the bulkhead, can be heated independently of the other.

OXYGEN EQUIPMENT

6. Flexible oxygen connections, with economizers, flowmeters and cut-off valves, are provided at the crew stations in the fuselage, and a supply is also taken to the dorsal and tail turrets. The cut-off valves are opened by the removal of the flexible pipe from the stowage or, in the case of the turret supplies, by the removal of the dummy sockets. The supply is controlled by the pilot through a regulator on his instrument panel. The oxygen bottles are stowed in a crate in the intermediate centre section of the fuselage, and a main high-pressure cut-off valve is provided at the front end of the crate. Portable oxygen bottles are provided at the crew stations. Refer Section 2, paragraph 23.

INTERCOMMUNICATION

7. Microphone-telephone sockets are provided at each of the crew stations. By means of a changeover system in the care of the wireless operator, the microphone-telephone sockets used for intercommunication may also be employed for the purpose of transmitting and receiving through the general purpose radio installation. The navigator's telephone can be isolated by two switches, one on the navigator's panel and the other on the pilot's instrument panel.

HANDRAILS

8. Handrails situated throughout the fuselage are painted yellow for ease of identification.

ELECTRICAL SERVICES PANELS

9. There are three electrical services panels in the fuselage, one in the front centre section and two in the intermediate centre section. The first is on the starboard side of the fuselage, and is linked by a continuous enclosed cable trough with the auxiliary distribution box at the forward end of the section. On the top face of this panel are mounted the generator voltmeter, generator control, reset and emergency switches and visual indicators for generator failure. At the rear end are switches for the head and signal lamps. Of the two panels in the intermediate centre section, one is on the port side and carries voltage regulators, circuit breakers and cut-outs. The other panel is the main electrical control panel, and is on the starboard side. It carries the master switch and master regulator, voltage regulators, circuit breakers and cut-outs. For further information, refer to Section 6, Chapter 1, Fig. 1.

NOSE

General

10. The nose constitutes that portion of the fuselage forward of the pilot's instrument panel and the bomb bay, a bulkhead separating it from the latter. The extreme forward end, which includes a central projecting frame glazed with flat transparent panels, forms the air bomber's station. Above the air bomber, and remotely controlled by him, is a Boulton-Paul type F electro-hydraulically operated gun turret. The camera stations are located behind the air bomber.

Camera Station

11. An F.24 camera is installed on an adjustable frame in the rear port side of the nose above a circular window in the floor. The control and heating switches are also on the port side, near the rear edge of the transparent panels.

Air Bomber's Station

12. The air bomber's station, with associated equipment, occupies the lower portion of the nose compartment. The air bomber operates from a sitting position in the fore part of the nose. The seat is constructed to slide in a fore-and-aft direction, and may be locked in any one of five positions by small levers situated fore-and-aft of the seat.

Immediately behind and below the seat is the parachute exit. Directly in front of the seat are the bomb sight support brackets, and below is the stowage for the bomb firing switch and bomb sight lead. On the port side of the nose is the computor for the Mk. XIV bomb sight.

Air Bomber's Automatic Controls Panel

13. The automatic controls panel is mounted on the port side of the nose, near the computor, on which are mounted the following switches:—

(i) Camera control and heater switches;
(ii) flare chute and PRESS TO TRANSMIT switches;
(iii) a flare warning light is provided above the flare chute switch.

Air Bomber's Panel

14. This panel is mounted on the starboard side of the nose, and contains the following items and switches:—

(i) Automatic bomb distributor;
(ii) bomb selector switch box;
(iii) pre-selector unit;
(iv) nose turret stop and start switches;
(v) bomb fusing switches;
(vi) 4000 lb. bomb release gear heating switch;
(vii) heating clothing switches, body, hands, feet;
(viii) stowage for height and speed computor.

15. Above the panel is a hand fire extinguisher, and on the bulkhead behind the turret a parachute pack is stowed.

16. Also on the starboard side are stowages for the following items of equipment:—

(i) Under the rear of the turret mounting — portable oxygen supply;
(ii) on the turret bulkhead door—"K" type dinghy and hand fire extinguisher;
(iii) step for servicing the nose turret.

17. There is also a hinged inspection door for the bomb compartment in the bulkhead at the rear of the nose, and a socket for connecting an inspection lamp.

De-icing for Air Bomber's Window

18. Glycol de-icing is provided for the bottom centre panel of the air bomber's window, and is operated by a hand pump on the port side opposite the air bomber's seat. When operated once a minute the pump delivers fluid at the rate of two pints per hour. The reservoir, which also supplies the pilot's windscreen, is of approximately four gallons capacity, and is fitted below the step at the rear of the nose. Further information on de-icing equipment can be obtained from A.P.1464D, Vol. I, Part 2, Section IV.

FRONT CENTRE SECTION

General

19. The front centre section, comprising that part of the aircraft from the front spar to the cockpit instrument panel, houses the following stations: Pilot's cockpit (see Section 1), flight engineer's and navigator's stations, wireless operator's station and fighting control station. The starboard side of the compartment serves as a gangway between stations and provides access to the nose of the aircraft.

Flight Engineer's Station

20. As a flight engineer is not normally carried in this aircraft, his duties are carried out by the second pilot; but if a flight engineer is carried he will occupy the second pilot's position beside the pilot. For description of the second pilot's seat, refer to Section 1, paragraph 3.

Flight Engineer's Instrument Panel

21. This panel is hinged at its lower edge and secured at its upper edge to the cockpit rail, and contains the following (see Fig. 3 for further details):—

(i) Switches for electric pumps on the fuel distributor tanks;
(ii) heating pressure head switch;
(iii) fuel pressure warning lamps;
(iv) six fuel contents gauges, calibrated for reading both when the aircraft is in flying and tail down positions;
(v) oil pressure gauges;
(vi) oil temperature and coolant temperature gauges;
(vii) two fuel meter gauges;
(viii) fore and aft auxiliary tank fuel meters and switches.

22. A knob for operating the emergency air system for main wheel units and flap lowering is mounted on the face of the former at the forward end of the panel.

Fuel Cross-feed Cock

23. The cross-feed cock is mounted on the floor just forward of the rear spar, with the control handle visible through the front spar cover. It should be turned on ONLY WHEN ALL ENGINES MUST BE FED FROM ONE SIDE, and fuel pumps should be ON ONLY AT THE SIDE FROM WHICH FUEL IS BEING FED.

NAVIGATOR'S STATION AND EQUIPMENT

General

24. The navigator's table is on the port side, aft of the pilot's seat. His seat is a bench running fore-and-aft alongside the table. The table is a permanent fixture containing a chart stowage; a lamp, which may be set in any desired position, is provided and mounted on the left-hand side of his instrument panel. In front of the table and attached to the port side of the aircraft is the navigator's instrument panel and pencil tray. The variation corrector is situated in the fuselage roof above the table.

25. There is a dome at the aft end of the canopy for taking sextant readings, and an anchorage for the air observer is attached to the floor just forward of the front spar step. The sextant is stowed on a panel at the forward end of the navigator's table, and a torch, an Aldis signalling lamp and a hand fire extinguisher are also stowed on this panel. At the base of the main radio panel is a code book stowage box. Drift sight recorder and the oxygen connection and economizer are on the starboard side opposite the table.

26. Signal pistol cartridge stowage clips are just forward of the front spar, and a blackout curtain, which can be pulled down within twelve inches of the floor, is fitted at the forward end of the fuselage roof, below the canopy. A curtain is also provided in the sextant dome. The observer's station is also used as a fighting control station, and a bullet-proof glass screen is fitted in the rear half of the sextant dome.

Radio

27. The following Radio Equipment is situated at the Navigator's station:—

(i) ARI.5083.—Situated below the forward end of the navigator's table, with the indicator unit attached to the back of the wireless operator's panel, at the rear end of the navigator's table.

(ii) ARI.3566.—Control unit, type 222A, situated above the control unit, type 184 or 184A, which is attached to a swivel mounting at the forward end of his table.

(iii) ARI.5583.—Switch unit, type 207B, with control units, 446 and 444, on the swivel structure, together with control unit 477 mounted on the forward end of the table. This controls the installation, ARI.5583, situated in the rear of the aircraft, and indicator unit, type 182, situated on the wireless operator's table.

(iv) Push buttons for ARI.5131 (I.F.F.); warning lamps for the above installation are fitted on the navigator's instrument panel.

(v) The whip aerial projects through the fuselage roof at former 7, just aft of the front spar.

Navigator's Instrument Panel (see Fig. 2)

28. The navigator's panel, which is positioned in front of the table (see paragraph 23), contains the following instruments and switches:—

(i) Altimeter, A.S.I.

(ii) Demolition master switch; warning lights and push buttons for I.F.F.

(iii) Nav.-Tel. Isolation switch.

(iv) Nos. 1 and 2 motor-driven alternator control push buttons.

(v) D.R. Compass control panel, type "D".

(vi) Call light.

(vii) Chart lamp (adjustable), on the left-hand side of the panel.

Wireless Operator's Station and Equipment

29. The wireless operator's seat, which is integral with the front spar cover step, is on the port side, and faces forward. A general service installation and an amplifier are mounted on a transverse structure (see also paragraph 27) at the rear end of the navigator's panel, a further wireless installation being mounted on the port side, aft of the rear spar. The control units for the I.F.F. installation are on the port side forward of the window. A scanner indicator is on the port side of the W/T. operator's table, and above it is a range indicator for the installation in the rear of the aircraft. An oxygen cut-off valve and the mic.-telephone distribution panel are on the port side above the window, and at the end of the table is a hinged flap which, when lifted, gives access to the stowage below. Immediately in front of the W/T. operator's seat, on the port side below the table, is a winch aerial. This aerial must be wound in before the bomb doors are opened. Access to this winch is obtained by lowering a sliding door in the side panel, a spare reel being stowed under the step at the front spar. The D.F. loop is mounted in the rear part of the canopy above the fuselage, and the visual indicator is located on the port side at the W/T. station. A spare valve stowage is formed below the step at the front spar.

INTERMEDIATE CENTRE SECTION

General

30. The intermediate centre section of the fuselage extends between the front and rear spars, and is divided at former 8 by a bulkhead comprising an armoured frame and two doors, which are normally of plywood, but may be of armour plate.

Forward Section

31. The forward section contains the following equipment:—

(i) *On the front spar*—Stowage for the astro-compass.

(ii) *On the front spar web*—Two air bottles for emergency lowering of the main wheels and flaps; the distributor block, automatic cut-out and high-pressure filter of the hydraulic system.

(iii) *On the port side*—Hydraulic reservoir and emergency hand pump, wireless installation plugging board, nitrogen bottles for the fuel tank nitrogen fire prevention system and methyl bromide bottle for fire prevention in the tank bays.

32. On the starboard side are stowages for the following items of equipment:—

Flying controls locking gear, "K" type dinghy, parachute, nitrogen fire prevention bottle, methyl bromide bottle for prevention of fire in the tank bays, fireman's axe, portable oxygen bottle and pouch for bomb winch handles.

Rear Half of Section

33. On the floor, port side, is a crate for oxygen bottles; the main stop cock of the oxygen system is located at the forward end.

34. Nitrogen bottles for fire prevention in fuel tanks are stowed along the rear spar and in the middle of the section on both port and starboard sides; above the bottle on the starboard side is the main stop cock for the nitrogen system, and below, in the bomb bay curtain, is the nitrogen charging point, which is reached through a small access door in the fuselage skin.

REAR CENTRE SECTION

General

35. The rear centre section consists of that part of the fuselage between the transport joint at the rear spar and that at former 27, including formers 22a, b, c, d and e, between formers 22 and 23. The structure is reinforced at the forward end by two tie-rods from the floor to the top of the formers. It contains the flap jack, mounted in the forward end of the compartment, the dorsal turret and a radio installation in the middle of the underside of the section, protected by a cupola fairing extending aft. This installation may be replaced by an under-defence gun mounted in the same aperture. In the bomb bay curtain, on the starboard side, is the ground-starter socket.

Port Side

36. The flying control rods run the full length of the section. Crates are mounted near the forward end to carry wireless equipment, and beneath them is a pigeon box stowage. The mid-gunner's parachute is mounted below the dorsal turret, and immediately aft of it an I.F.F. wireless installation. On the rear face of the bulkhead at the aft end of the bomb bay is a portable oxygen bottle stowage. The oxygen installation for the under-defence gunner's position is mounted a little further aft. Above the under-defence position are mountings for ammunition boxes, from which ammunition tracks run to the rear turret. The di-pole aerial and marker receiver are mounted aft of the ammunition stowages.

Starboard Side

37. The cabin heating duct, which is supplied by pipes entering the forward end of the fuselage from the port mainplane, runs aft along the starboard side into the rear section; above it runs the duct which protects the manual release for the dinghy. The following equipment is mounted on the starboard side: Near the forward end, a "K" type dinghy; stowages for desert equipment; loose ammunition bags in the dorsal turret; one parachute and two "K" type dinghy stowages. There is a step down from the floor over the bomb bay into the rear end of the section, in which is a parachute stowage, a fire extinguisher and mounting for ammunition boxes, with ducts running aft to the rear turret. There is also a wireless installation and D.R. compass and junction box. Further aft, three 4.5 flares are stowed (see paragraph 39).

Flare Chutes

38. The two chutes for photo-flash, navigational aids and reconnaissance are mounted one behind the other, at the rear end of the rear centre section on the port side, between formers 25 and 26. They are twin cell chutes, fitted with a deflector door which is lowered automatically when the bomb doors are opened. The chutes are opened by electrically-operated mechanism which is reset, when the doors are closed again, by a foot-operated lever. Selector switches for the

release of either the photo-flash flare (forward) or the navigational and reconnaissance flare (rear) are released by the air bomber operating the control switches located on the automatic control panel. A delaying mechanism ensures that the camera does not begin to operate until a predetermined interval has elapsed after dropping the photo-flash flare. In case of failure of the electrical mechanism the flare can be released by operating a small hand lever, covered by a guard on the side of the chute.

Flare Stowage

39. There are three 4.5 flares stowed on the port side of the rear centre section between formers 25 and 26 in line with the hand rail.

REAR SECTION

General

40. The rear fuselage comprises the tail end of the fuselage aft of former 27. It contains the tail turret, draught-proof screen and walkway, lavatory, tail wheel strut mounting beam and downward identification lamps.

Port Side

41. The flying control rods continue through this section as far as former 39, where they are connected by appropriate levers to rods in the tail plane. Ammunition tracks run aft to the tail turret, connecting it with the ammunition stowages in the rear centre section. An oxygen supply point is supplied just forward of the tail plane, and a hand fire extinguisher immediately forward of the tail turret. A handrail is fitted to assist in entering and leaving the turret. Four flame floats are stowed between formers 27 and 30 in line with the handrail.

Stowage for Kit, Tropical

42. A stowage bag for tropical kit is provided on the port side of the rear fuselage between formers 36 and 37, and contains the following equipment:—

Cover for Undercarriage Lock — Two.
Cover for Undercarriage Lock, without jury strut — Two.
Sand sealing cover for cabin heating intake and outlet fairings — One.
Sand sealing cover for cabin heating nostril on leading edge — One.

Starboard Side

43. At the extreme forward end is a pigeon box stowage, and below it a fireman's axe. Between formers 30 and 32 is the main door into the fuselage, and above the door runs the cabin heating duct, which traverses the section from the transport joint to the tail turret, passing under the tailplane. Alongside the door is the dipstick stowage, and aft of this the first aid box. Two flame floats are stowed between formers 27 and 29, in line with the ammunition duct. Between the tailplane and tail turret are stowages for a portable oxygen bottle, parachute and "K" type dinghy; above the last named is a short handrail. Below the rear end of the section, outside the fuselage, is fitted the type "F" equipment and, to special order only, a glider towing mechanism. The tail turret forms the end of the section.

KEY TO FIGURE 1

GENERAL EQUIPMENT

	Item No.
NOSE SECTION—	
Nose turret	1
Air bomber's transparent panelling	2
Aerial mounting	3
Air bottle (pneumatic system)	4
Guards for de-icing tubes	5
Rudder pedals	6
Bomb sight	7
Head lamp	8
Bomb sight control	9
Bomb aimer's floor	10
Bomb aimer's seat	11
Bomb aimer's panel	12
Static line	13
Immersion switch	14
Glycol tank	15
Inertia switches	16
Rudder pedal stop bracket	17
Air temperature thermometer	18
Glycol spray for air bomber's window	19
Air extractor louvre	20
Mk. XIV bomb sight computor	21
Computor mounting	22
Air filter	23
Camera shade	24
Camera	25
Air intake throttle (auto-pilot)	26
FRONT CENTRE SECTION—	
Pilot's D.R. compass repeater	27
Radiator flap controls override switch	28
Intercommunication	29
Flight engineer's panel	30
Pilot's canopy blind	31
Padding on former 1	32
Navigator's blackout curtain	33
Window curtain	34
Signal pistol cartridge stowage	35
Armoured glass in astrodome	36
Astrodome blackout curtains	37
Astro compass rail and stowage	38
Second pilot's seat	39
Trough for conduits	40
Cabin heating control	41
Valve stowage	42
Combined spar cover, wireless operator's seat, step and spare aerial wheel stowage	43
Control column	44
Pilot's hand grip	45
Glider tow release	46
Pilot's auxiliary panel	47
Pilot's chair	48
Armour plating	49
Undercarriage warning buzzer	50
Navigator's panel	51
Astrograph	52
Angle poise lamp	53
Signal pistol upward firing stowage	54
Pilot's windscreen de-icing hand pump	55
Map stowages	56
Trimming tab control box	57
Navigator's seat	58
Navigator's table	59
Trailing aerial winch	60
Wireless operator's harness	61
Trough for conduits	62
INTERMEDIATE CENTRE SECTION—	
Bulkhead	63
Nitrogen control and pressure gauge	64
Nitrogen bottles	65
Step at front spar	66
Flying controls locking gear	67
Armour protection, fire control station	69
Wireless installation crate	70
Oxygen bottles crate	71
REAR CENTRE SECTION—	
Cabin heating control	72
Dorsal turret	73
Cabin heating duct	74
Ammunition stowage boxes	75
Ammunition duct	76
Card holder (compass deviation)	77
Handrails	78
20 mm. ammunition stowage boxes	79
Step	80
D.R. compass	81
Vertical reinforcing rods	82
Wireless crate	83
Dorsal turret suppressors	84
Rear spar cover	85
Pigeon stowage	86
Call lamp	87
Twin cell flare chute	88
Flares, 4.5 in.	89
REAR SECTION—	
Entrance door	90
Ammunition assister panels	91
Tropical kit stowage	92
Draught-proof door	93
"D" type tail turret	94
Downward identification lights	95
Cabin lamp stowage	96
Dipstick stowage	97
Lavatory	98
Walkway	99
Entrance step	101
Navigation lights	102
Flame floats	103
Glider towing equipment	104
EMERGENCY EQUIPMENT—	
Parachute stowage	A
Dinghy stowage	B
Parachute exit	C
Emergency air remote control	D
Emergency roof exit	F
Emergency air bottles	G
First aid external release	J
Dinghy external release	K
Fuel jettison control	L
First aid box	X

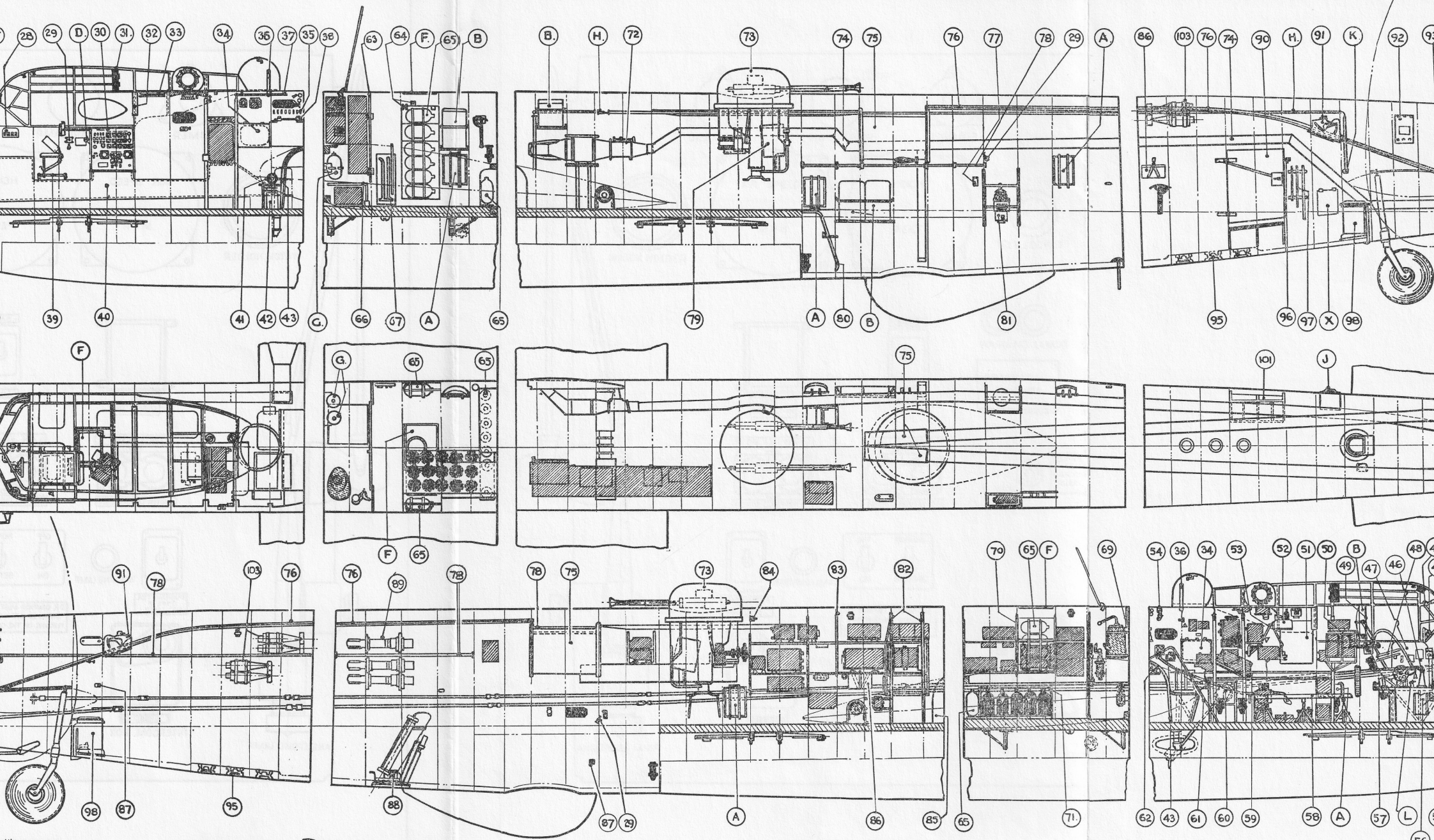

LOCATION OF EQUIPMENT

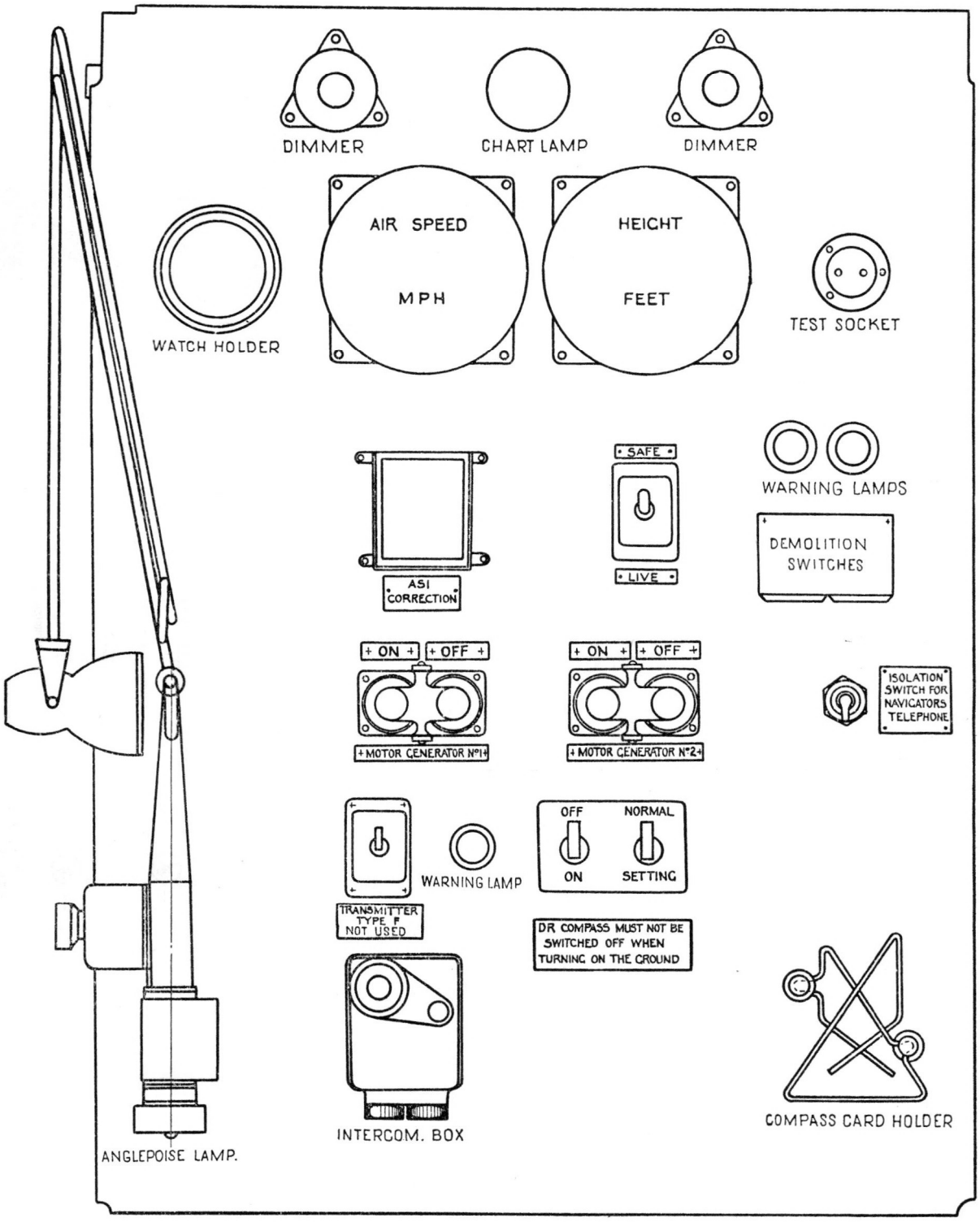

2	NAVIGATOR'S INSTRUMENT PANEL	2

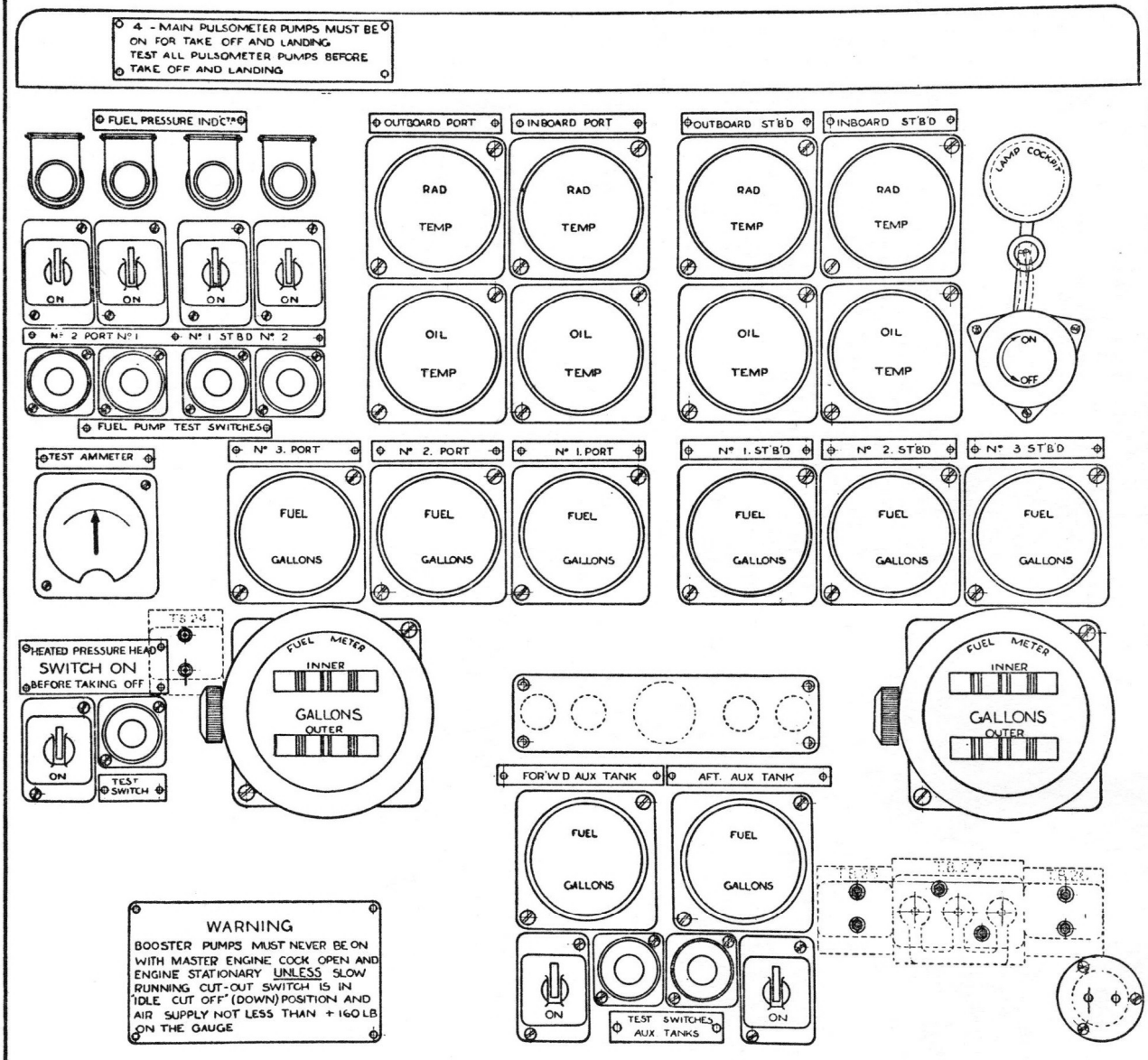

3	FLIGHT ENGINEER'S PANEL	3

Section 4

Instructions for Ground Personnel

CHAPTER 1 LOADING AND C.G DATA
CHAPTER 2. GROUND HANDLING AND PREPARATION FOR FLIGHT
CHAPTER 3. GENERAL SERVICING.

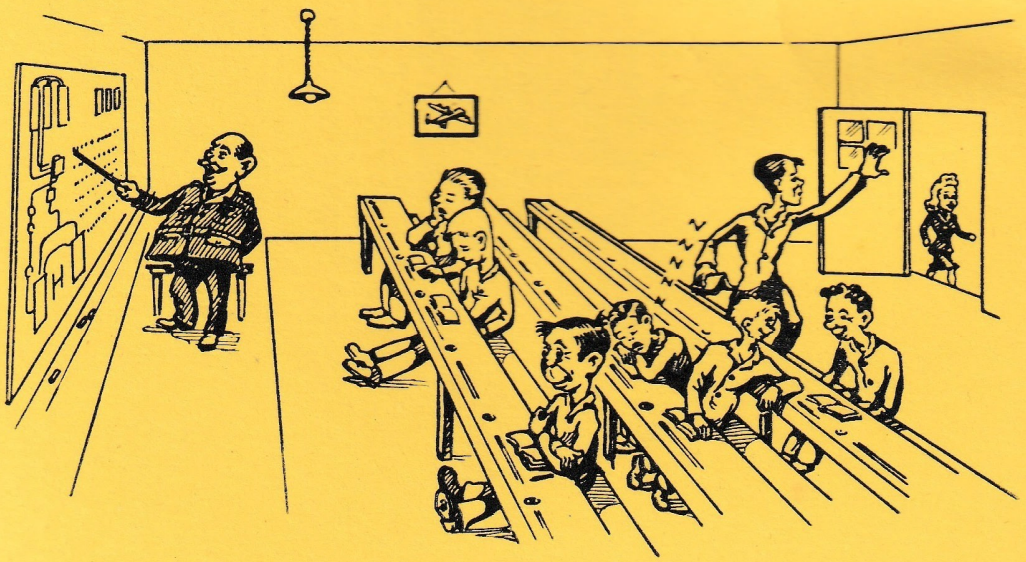

SECTION 4 — CHAPTER 1

Loading and C.G. Data

CONTENTS

	Para.
INTRODUCTION	1
DEFINITION OF C.G. POSITION	3
DATUM POINT	4
MOMENTS AND MOMENT ARMS ...	5
C.G. RANGE	6
DETERMINATION OF THE C.G. POSITION	8
BASIC TARE WEIGHT, MOMENT ARM AND MOMENT	9
WEIGHT SHEET SUMMARIES	10

Loading and C.G. Data

Introduction

1. This chapter is concerned with loading of the aircraft, and with the effect upon the centre of gravity (C.G.) position of different distribution of loads. The data given enables investigation to be made into C.G. movements resulting from expending of loads, *e.g.,* fuel and bombs, during flight, and conditions arising from movement of loads during flight.

2. For determination of the C.G. position, the aircraft is considered standing, with the thrust line, or rigging datum line, horizontal and the undercarriage lowered.

DEFINITION OF C.G. POSITION

3. The position of the C.G. is defined by its distance in inches, measured parallel with the fuselage datum line, from a reference point known as the C.G. datum point (see paragraph 4). The distance is called the moment arm (see paragraph 5) of the C.G., and is determined from the following expression:—

$$\frac{\text{Tare weight (lb.)} \times \text{Tare moment arm (ft.)} + \text{Weight of loads (lb.)} \times \text{respective arms (ft.)} \times 12}{\text{Tare weight} + \text{Total weight of loads}}$$

$$\text{Tare moment} + \frac{\text{Load moments} \times 12}{\text{Total weight}}$$

DATUM POINT

4. The datum point is arbitrarily located by the manufacturer and, on Lincoln aircraft, is indicated on both sides of the fuselage by a plug hole 15 in. forward of the front face of the mainplane front spar and 2 in. below the fuselage datum line. The starboard plug hole can be used for suspending a plumb line, the datum point being used in this manner when the C.G. is to be determined by weighing (see A.P.1464D, Vol. I).

MOMENTS AND MOMENT ARMS

5. The moment of an item is the product of its weight (lb.) and its moment arm (in.) measured parallel with the fuselage datum line, from the datum point. The moment arm of a load lying forward of the datum point is negative (although the load itself is always positive), and the resultant moment is, therefore, negative. The moment arm and moment of a load lying aft of the datum point are positive.

6. The approval limits of C.G. travel are: Forward limit, 45 inches aft of datum, and the aft limit, 66 inches aft of datum. The C.G. must always be kept within these limits, even after using nearly all fuel and oil, bombs, etc.

7. Movement resulting from retraction of the undercarriage is allowed for; the effect of undercarriage retraction may therefore be ignored when making calculations.

DETERMINATION OF THE C.G. POSITION

8. To determine the C.G. position, the first step must be to ascertain the effect upon the basic tare weight and corresponding moment of modifications incorporated in the aircraft, other than those already taken into account in paragraph 9, and the possible removal of any normally fixed items of equipment. Typical service load (T.S.L.) items and alternatives will be found in the R.A.A.F. Publication entitled, "Lincoln Weight Sheet Summary", and these must be added to conform to the loading of the aircraft; generally, it may be found more convenient to add the complete T.S.L. as an item, and correct for additional items or items not required.

BASIC TARE WEIGHT, MOMENT ARM AND MOMENT

9. These are as follow:—

Tare Weight	*Moment Arm*	*Moment*
43,453.60 lb.	54.84 ins.	2,383,092

The following modifications are incorporated in the basic tare weight:—

Airframe Modifications Incorporated. — L.1, L.2, L.3, L.4, L.5, L.7, L.8, L.9, L.10, L.11, L.13, L.15, L.16, L.17, L.18, L.19, L.20, L.21, L.22, L.23, L.24, L.26, L.29, L.31, L.32, L.33, L.34, L.37, L.39, L.40, L.41, L.42, L.43, L.44, L.46, L.52, L.56, L.57, L.58, L.60, L.61, L.64, L.66,

L.74, L.75, L.76, L.77, L.92, L.94, L.95, L.100, L.109, L.111, L.112, L.119, L.122, L.123, L.124, L.126, L.135, L.136, L.137, L.139, L.141, L.148, L.149, L.150, L.151, L.153, L.154, L.155, L.158, L.159, L.160, L.162, L.165, L.168, L.169, L.170, L.179, L.181, L.183, L.185, L.188, L.190, L.193, L.204, L.206, L.236, L.205, L.237, L.247, L.88, L.280, L.285, L.286, L.292, L.357.

Airframe Modifications Partially Incorporated. —L.47, L.189, L.6, L.65. Concession Nos.—(BCA.1083), (BCA.1086), (BCA.971), (BCA. 1195).

Airframe Modifications Not Incorporated. — L.14 (Concession, BCA.935).

Airframe Modifications Incorporated, but Not Released. — L.306 (Concession, BCA.1193).

B. & P. Type "F" Nose Turret

Modifications Incorporated.—3065, 3066, 3067, 3071, 3077, 3078, 3090, 3092, 3093, 3094, 4501, 4502, 4504, 4506, 4507, 4508, 4509, 4510, 4512, (4513, L.24), 4514, 4518, 4522, 4523, 4524, 4526, 4527, 4529, L.100.

Modifications Not Incorporated.—3074, 3089, 4500 (Concession, BCA.740).

B. &. P. B17 Mid-Upper Turret

Modifications Incorporated.—684, 692, 702, 708, 709, 711, 712, 719, 722, 731, 734, 735, 736, 741, 748, 751, 757, 760, 762, 770, 771, 773, 778, 782, 783, 788, 791, 793, 797, 802, 811, 815, 819, 871, L.75, L.95, L.122.

Modifications Not Incorporated. — 671, 740, 794, 798, 801, 812, 826, 856. (Concession, BCA.813, BCA.1075.)

B. &. P. Type "D" Rear Turret

Modifications Incorporated.—3028, 3029, 3030, 3031, 3032, 3035, 3037, 3040, 3041, 3042, 3044, 3045, 3047, 3053, 3058, 3062, 3068, 3069, 3070, 3075, 3079, 3080, 3081, 3082, 3083, 3084, 3086, 4000, 4002, 4007, 4010, 4013, 4023, 4031, 4032, L.111, L.112.

Modifications Not Incorporated.—3098, 4001, 4003, 4004, 4008, 4014, 4015, 4017, 4024, 4027, 4030, 4034, 4038 (Concession, BCA.741, BCA. 1054).

Lincoln Technical Instructions

1, 2A, 3, 4, 5, 7, 8, 10.

Lincoln Servicing Instructions

2, 3, 4, 4A—*Carried out.*

D.T.S. S.I./1, D.T.S. S.I./2, D.T.S. S.I./3, D.T.S. S.I./General/82—*Carried out.*

D.T.S. S.I./5—*Carried out.*

D.T.S. S.I./2, D.T.S. S.I./10, D.T.S. S.I./11, D.T.S. S.I./Lincoln 3, D.T.S. S.I./General/77 —*Carried out.*

D.T.S. S.I./Lincoln 5, D.T.S. S.I./Lincoln 10, D.T.S. S.I./Lincoln 11, D.T.S. S.I./General 82, D.T.S. S.I./Electrical 69.

Lincoln Orders /2, /3, /4, /8, /10.

S.T.I./1, /2A, /3, /4, /5, /7, /8, /10, /Misc.122.

S.I./2, /3, /4, /4A.

Engine Modifications Incorporated

L.69, L.117, L.147, L.191, L.202, L.301, L.357.

Lincoln Service Instructions

D.T.S. S.I./Merlin B22/7—*Carried out.*

Special Technical Instruction/Merlin 16—*Carried out.*

Special Instruction/Merlin 18—*Carried out.*

WEIGHT SHEET SUMMARIES

10. For Weight Sheet Summaries of Lincoln Aircraft refer to the applicable R.A.A.F. publication.

SECTION 4—CHAPTER 2

Ground Handling and Preparation for Flight

CONTENTS

	Para.		Para.
GENERAL	1	FLYING CONTROLS LOCKING GEAR ...	8
TOWING	2	LOCATION OF SERVICING POINTS ...	9
Forward Towing	3	DIPSTICKS	10
Backward Towing	4	ELECTRIC PRIMING SYSTEM	11
PICKETING	5	TOPPING-UP COOLING SYSTEMS ...	13
COVERS	7	DRAINING FUEL, OIL, AND COOLING SYSTEMS	14

ILLUSTRATIONS

	Fig.
Towing	1
Picketing and Arrangement of Covers ...	2
Locking of Flying Controls	3
Servicing Points	4

Ground Handling and Preparation for Flight

General

1. This chapter contains information on handling the aircraft on the ground and preparing it for flight.

TOWING

2. The towing arrangements are shown in Fig. 1. Before towing, ensure that the undercarriage jury struts are in position between the top joint of the undercarriage strut and the locking joint on the retracting strut. It is necessary for someone to be in the pilot's seat to apply the brakes when required.

Forward Towing

3. The aircraft is towed forward by a towing bridle, Part No. 1/U.574 (Stores Reference W4G/11859), which is attached to the eyebolt at the bottom of the inner shock-absorber strut of each main wheel unit. The tail wheel steering arm, Part No. 1/U.572 (Stores Reference W4G/11846) should be used in conjunction with the towing bridle.

Backward Towing

4. A towing bar, Part No. 1/U.573 (Stores Reference W4G/11847), mounted on two small wheels, is hooked to the bobbins at the end of the tail wheel fork and secured in position by a spring-loaded plunger. The bar is fitted with a spring-loaded mechanism which releases the aircraft if the pull exerted by the tractor exceeds a load of 4750 lb. The release is spring operated and simple to re-engage. When using the tail towing bar the elevators must be locked in the neutral position (see paragraph 8).

PICKETING

5. A picketing diagram is given in Fig. 2. The picketing points on the aircraft can be used in conjunction with the standard picketing layout, concerning which full details are given in A.P.1464A, Vol. I (old publication), Part 8, Section I, Chapter 2; or A.P.1464G, Vol. I (new publication), Part 2, Section V, Chapter 2. The mainplane is picketed from the shackles on the front spar between ribs 17A and 17B on the intermediate plane and the centre plane. Doors in the skin on the underside of the plane give access to these shackles. The fuselage is picketed at the tail end by ropes lashed around the tail wheel axle and to eyebolts, Part No. 1/U.576 (Stores Reference A73/4262), which are to be screwed into the sides of the fuselage, just above the rear end of the bomb doors. The eyebolts are part of the aircraft tool kit.

6. When the aircraft is picketed, the main wheels should be chocked and the chocks held in position by stakes. The outer picketing ropes on the mainplane should be left slack on the picketing points and weighted with sand bags. After removing the picketing ropes from the aircraft, care should be taken to ensure that the special eyebolts in the sides of the fuselage are removed and replaced by standard screwed plugs. The weather covers (see paragraph 7) should be fitted when the aircraft is picketed.

COVERS

7. Weather covers (see Fig. 2) are provided for the power plants, canopy, nose (including the turret), mid-upper turret, tail turret and for the pressure head.

FLYING CONTROLS LOCKING GEAR

8. This gear (see Fig. 3) is stowed on the starboard side of the fuselage, between the mainplane spars, and consists of—

(i) a strut to be fastened to the top of the pilot's seat and to a bracket on the control column;

(ii) a strut to be inserted at one end into the port cockpit rail and fitted by two screwed hooks to the hand wheel, to prevent it rotating;

(iii) a T-tube with a transverse member to be inserted in the hollow footrest of each rudder pedal and the other end attached to the bracket on the control cloumn.

LOCATION OF SERVICING POINTS

9. The locations of the inflation valves, filler caps and other servicing points are shown in Fig. 4. Inflation pressures and specifications for fuel, oil, hydraulic fluid and de-icing fluid will be found in the Leading Particulars.

DIPSTICKS

10. Dipsticks for the fuel tanks are stowed in the fuselage on the starboard side, just aft of the main door. The oil tank dipsticks are stowed inside the filler necks. The dipstick for the header tank in the hydraulic system is integral with the filler cap.

ELECTRIC PRIMING SYSTEM

11. The electrical priming system for the engines consists of an electric pump on the firewall of each inboard nacelle and a solenoid operated valve on the firewall of each of the four nacelles. The solenoid valves are controlled by four push buttons on the pilot's instrument panel, labelled ENGINE PRIMING, and the switch for the electric pumps, with a warning lamp, is on the right of the push buttons. Each outboard delivery pipe is provided with a bleed connection to the carburettor vapour vent pipe at a union on the firewall. Access for cleaning purposes to the small hole forming the bleed is obtained by disconnecting the bleed pipe from the adaptor and then the adaptor from the union. A small filter is fitted between the adaptor and the union. The object of the bleeds is to ensure that all air locks in the pipes are driven out.

12. The engines should be primed separately just before starting. The procedure is as follows:—

(i) Switch on the priming pump and allow it to run for at least half a minute to ensure that fuel under pressure is available at the valve inlet and that all air locks have been driven out.

(ii) To open the solenoid valve for actual injection, press the push button for the following times:—

Air Temp.	*Time to Inject, in Seconds*
+30°C.	2
+20	3
+10	4½
+ 5	6
0	7½

TOPPING-UP COOLING SYSTEMS

13. The aircraft must be in the tail-down attitude and the engines must be cold. Both the main and intercooler systems should be topped-up to the lower edge of the filler opening with the correct mixture of glycol and distilled water (see Leading Particulars). Care should be taken to avoid splashing of coolant, since glycol will damage the rubber-covered cables of the power plant. The normal loss of coolant is small, and if more than four pints in the main system and two pints in the intercooler system are required to restore the respective levels, an examination for leaks should be made and the functioning of the relief valve checked.

DRAINING FUEL, OIL AND COOLING SYSTEMS

14. For draining instructions, see Chapter 3 of this Section.

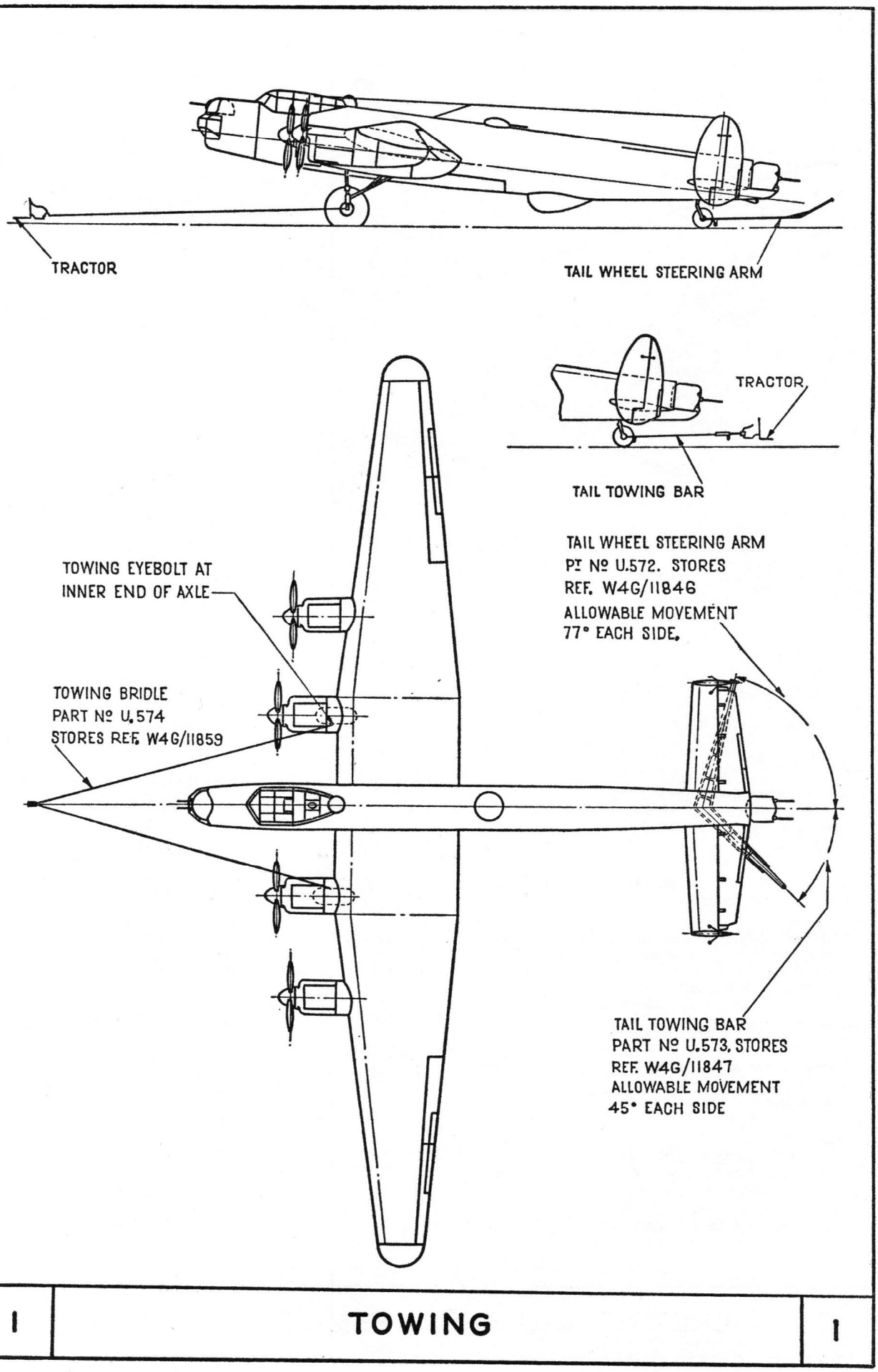
TRACTOR
TAIL WHEEL STEERING ARM
TRACTOR
TAIL TOWING BAR
TOWING EYEBOLT AT INNER END OF AXLE
TOWING BRIDLE PART Nº U.574 STORES REF. W4G/11859
TAIL WHEEL STEERING ARM PT Nº U.572. STORES REF. W4G/11846 ALLOWABLE MOVEMENT 77° EACH SIDE.
TAIL TOWING BAR PART Nº U.573. STORES REF. W4G/11847 ALLOWABLE MOVEMENT 45° EACH SIDE

1 **TOWING** 1

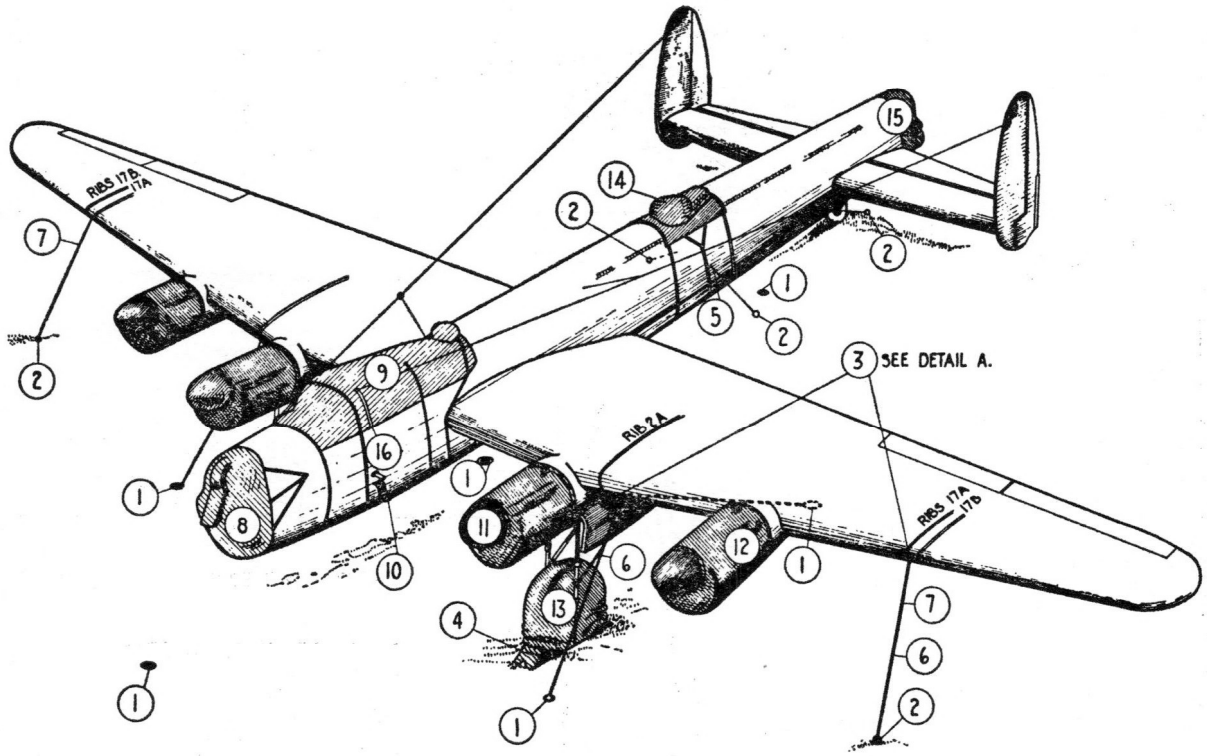

PICKETING.

1. STANDARD PICKETING POINTS.
2. SCREW PICKETS
3. LARGE PICKETING SHACKLES PROVIDED ON FRONT SPAR AT RIBS 2A AND BETWEEN RIBS 17A AND 17B. SEE DETAIL A.
4. CHOCK MAIN WHEELS, SECURE CHOCKS IN POSITION BY STAKES
5. SCREWED PICKETING POINT ON LONGERON AT FORMER 22. REMOVE PLUG AND FIT EYEBOLT PART Nº 1/U576. (STORES REF. A.73/4262)
6. PICKETING ROPES.
7. ROPES AT TWO OUTER POSITIONS TO BE LEFT SLACK ON PICKETING POINTS AND WEIGHTED WITH SANDBAGS.

NOTE.
AIRCRAFT MUST BE PLACED CENTRALLY ON THE PICKETING POINTS SO THAT 3 POINTS LIE UNDER ℄ OF FUSELAGE AND TWO OUTER POINTS ARE LOCATED APPROX. 6 Ft FORWARD OF THE WING LEADING EDGE.

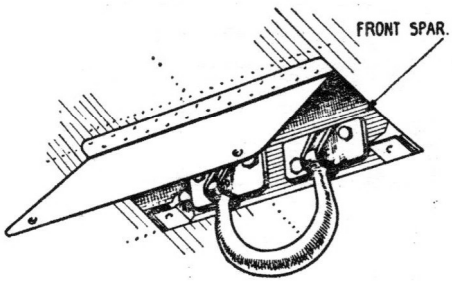

DETAIL A

PICKETING SHACKLES ON FRONT SPAR.

COVERS

8. NOSE COVER PART Nº 1/Z.2918 (STORES REF. T.27D/2278) TAPES TIED TO AERIAL BRACKET.
9. CANOPY COVER PART Nº 1/Z.2908 (STORES REF. T.27D/2279) TAPES TIED UNDERNEATH THE FUSELAGE
10. PRESSURE HEAD COVER PART Nº 1/Z.2512
11. SPINNER COVER PART Nº 1/Z.3716 DUTCH LACED IN CONJUNCTION WITH ENGINE COVER AND TIED ROUND BASE OF PROPELLER BLADES.
12. ENGINE COVER PART Nº 1/Z.2769 (STORES REF. T.27D/2281) DUTCH LACED UNDERNEATH AND IN CONJUNCTION WITH SPINNER COVER. TAPES WRAPPED ROUND AND TIED WHERE CONVENIENT
13. WHEEL COVERS PART Nº 3 & 4/Z.2928 (STORES REF. T.27D/16123)
14. MID-UPPER TURRET PART Nº 1/Z.3789 TAPES TIED UNDERNEATH FUSELAGE.
15. REAR TURRET COVER. PART Nº 1/Z.0111. DUTCH LACED AT REAR AND UNDERNEATH TAPES SECURED TO TAIL WHEEL SHOCK ABSORBER STRUT.
16. LIFT-THE-DOT FASTENERS.

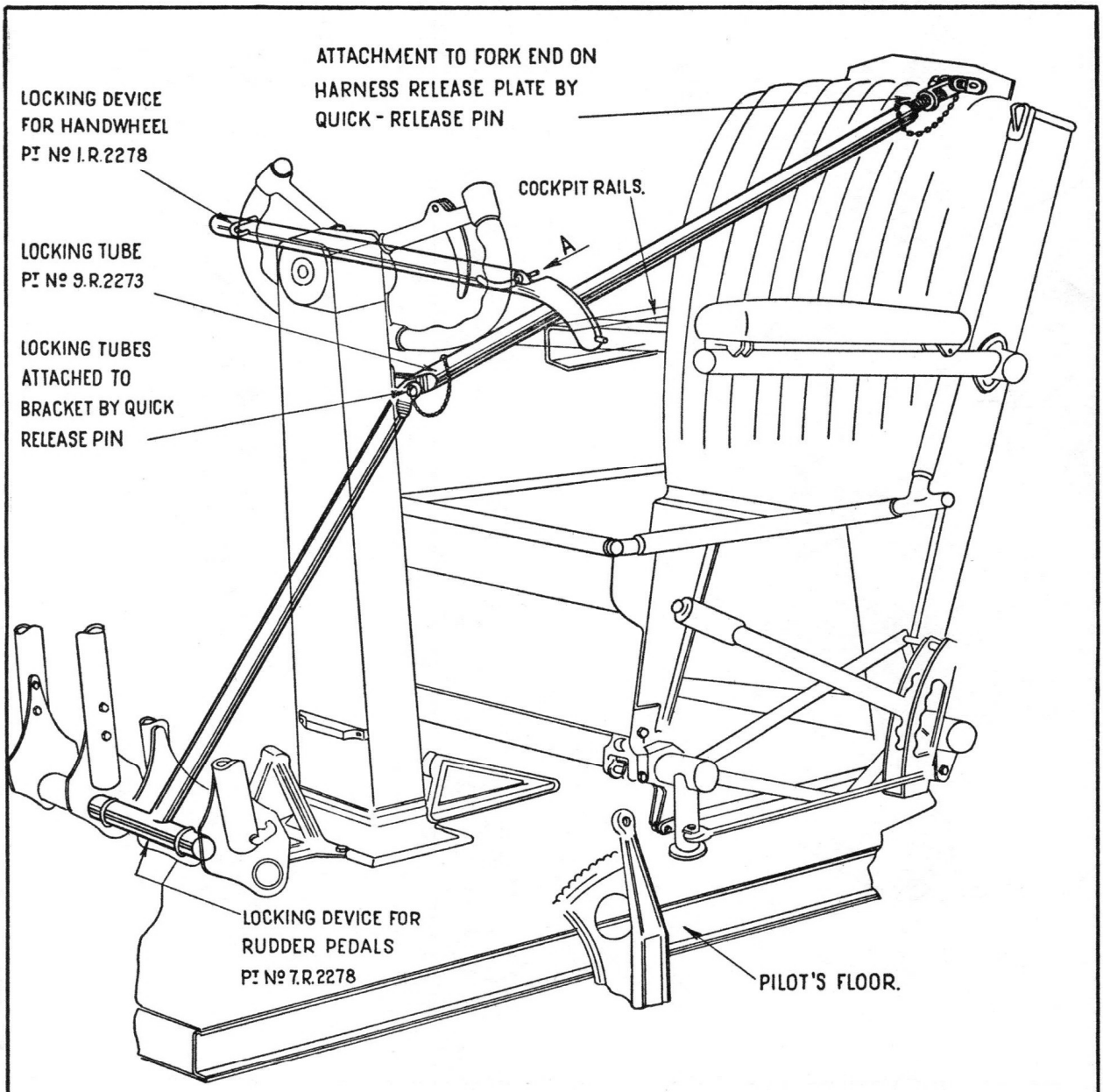

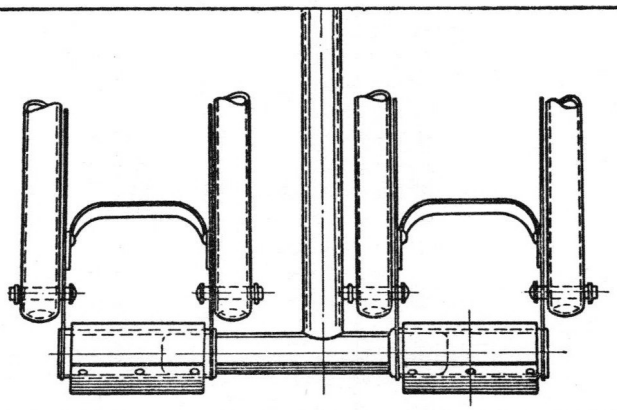

VIEW IN DIRECTION OF ARROW SHOWING METHOD OF LOCKING RUDDER PEDALS

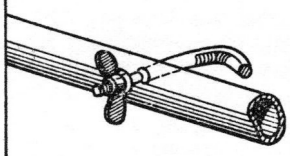

DETAIL IN DIRECTION OF ARROW A

3	LOCKING OF FLYING CONTROLS	3

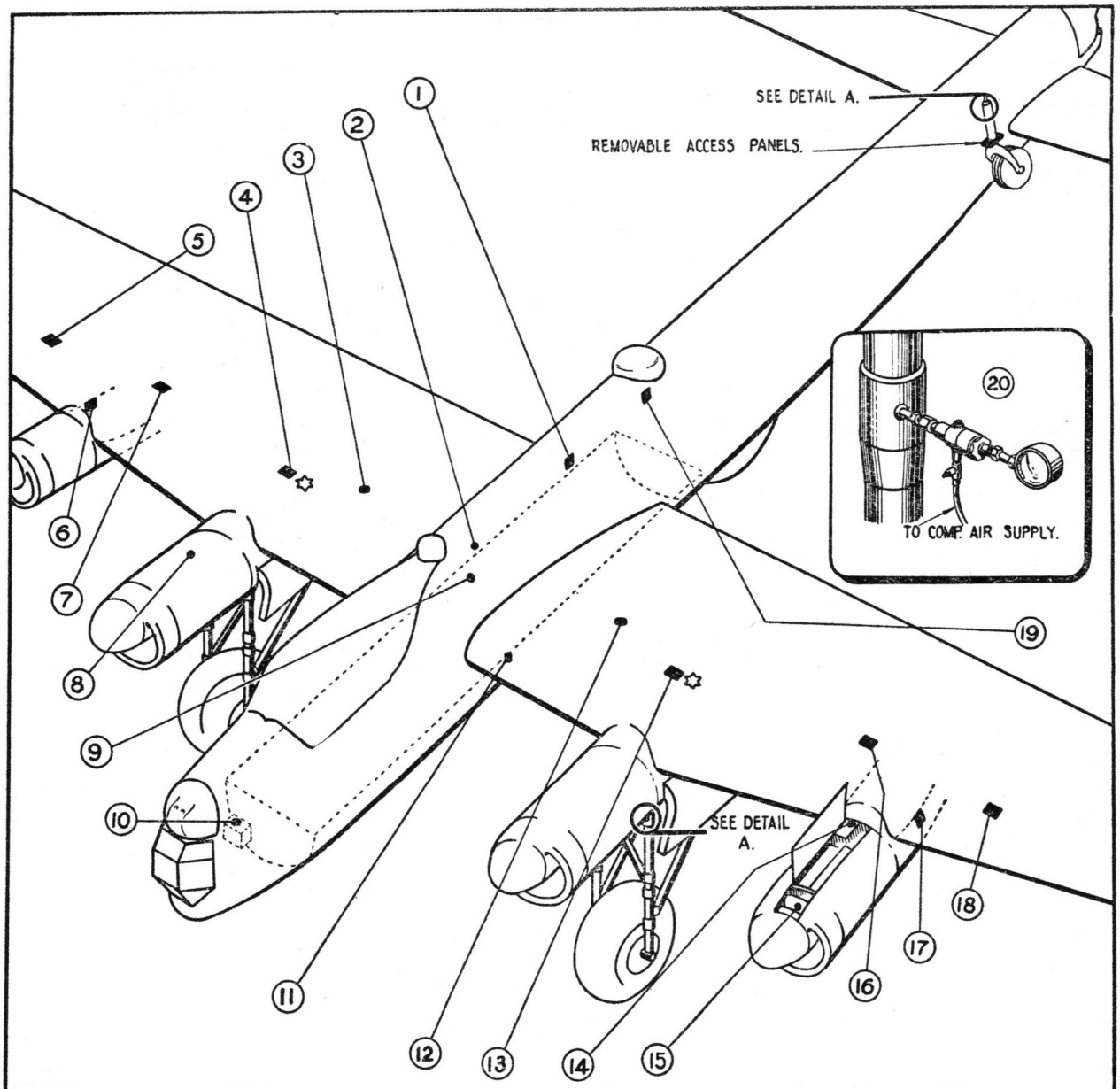

1. ELECTRICAL GROUND SUPPLY SOCKET IN STARBº SIDE-EXTERNAL ACCESS.
2. NITROGEN CHARGING VALVE IN STARBº SIDE - EXTERNAL ACCESS.
3. No. 1 FUEL TANK FILLER CAP-TOP SURFACE-STARBº.
4. OIL TANK FILLER CAP FOR STARBº INBOARD ENGINE - TOP SURFACE.
5. No. 3 FUEL TANK FILLER CAP-TOP SURFACE-STARBº.
6. OIL TANK FILLER CAP FOR STARBº OUTBOARD ENGINE, ACCESS THROUGH REMOVABLE DOOR IN OUTBOARD FAIRING PANEL.
7. No.2 FUEL TANK FILLER CAP - TOP SURFACE - STARBº
8. PNEUMATIC CHARGING POINT ON BRACKET BETWEEN UNDERCARRIAGE BEANS.
9. HYDRAULIC RESERVOIR FILLER CAP INSIDE THE FUSELAGE AFT OF THE FRONT SPAR
10. DE-ICING (WINDSCREEN) FILLER CAP ON TANK INSIDE FUSELAGE.
11. EMERGENCY AIR FOR UNDERCARRIAGE AND FLAPS.
    OXYGEN SYSTEM.
    CHARGING VALVES IN PORT SIDE - EXTERNAL ACCESS.
12. No. 1 FUEL TANK FILLER CAP - TOP SURFACE - PORT.
13. OIL TANK FILLER CAP FOR INBOARD PORT ENGINE - TOP SURFACE.
14. INTERCOOLER SYSTEM FILLER CAP (FILL TO EDGE OF CAP.)
15. COOLANT MAIN SYSTEM FILLER CAP. REMOVE ACCESS DOOR. (FILL TO EDGE OF CAP.)
16. No. 2 FUEL TANK FILLER CAP - TOP SURFACE - PORT.
17. OIL TANK FILLER CAP FOR PORT OUTBOARD ENGINE ACCESS THROUGH REMOVABLE DOOR IN OUTBOARD FAIRING PANEL.
18. No. 3 FUEL TANK FILLER CAP - TOP SURFACE - PORT.
19. VACUUM TEST COCK IN STARBOARD SIDE - EXTERNAL ACCESS.
20. INFLATION POINTS FOR THE MAIN WHEEL AND TAIL WHEEL SHOCK-ABSORBER STRUTS.

    ACCESS TO TAIL WHEEL INFLATION POINT THROUGH REMOVABLE PANELS IN BOTTOM SURFACE OF THE FUSELAGE.

✡ IMPORTANT CARE SHOULD BE TAKEN NOT TO OVERFILL THESE TANKS.

SECTION 4 — CHAPTER 3

General Servicing

CONTENTS

	Para.
GENERAL	1
FORMER POSITIONS AND INSPECTION PANELS	2
JACKING —	
Method of Using Jacks	3
Jacking Complete Aircraft	5
Jacking for Undercarriage Retraction Tests	6
Jacking for Main Wheel Changing	7
Jacking Rear End	8
Jacking Sections of Aircraft	9
LUBRICATION —	
General	10
RIGGING —	
General	11
Main Plane	13
Tail Plane	14
Fins and Rudders	15
SETTING OF FLYING CONTROLS —	
General	16
Ailerons	17
Flaps	18
Rudders and Elevators	19
Trimming Tabs	20
Rectifying Defects in Trim	21
Setting of Automatic Controls	22
MASS-BALANCING —	
General	23
Ailerons	24
Elevators	25
Rudders	27
ENGINE INSTALLATION —	
FUEL, OIL AND COOLANT SYSTEMS —	
Fuel Tank Servicing Cocks	29
Draining the Fuel Tanks	30
Draining the Distributor Tanks	31
Cleaning the Fuel Tanks	32
Draining the Oil Tanks	33
Cleaning the Oil Tanks	34
Cleaning the Oil Filters	35
Draining the Cooling Systems	36
Filling the Cooling Systems	38
FUEL CONTROL COCKS —	
General	39
Pressure Tests	42
ENGINE AND FUEL COCK CONTROLS —	
General	43
Throttle and propeller controls	44
Boost cut-out control	45
Fuel cock controls	46
HYDRAULIC SYSTEMS —	
General	47
Filling	49
Bleeding	50
To bleed the main wheel and bomb door circuits	51
To bleed the flap circuit	52
Operational tests	53
Main wheel units	54
Flaps	55
Bomb doors	56
Fuel jettison system	57
Resetting the jettison valve	61
Faults and their remedies	62
Servicing of components	63
Cleaning hydraulic fluid filter	64
ALIGHTING GEAR —	
General	65
MAIN WHEEL UNITS —	
General	66
Removal of wheel	68
Removing and refitting tyre	69
MAIN WHEEL SHOCK-ABSORBER STRUTS —	
General	70
Inflation adaptor	71
Fluid level check	72
Topping-up with fluid	73
Inflation pressure check	74
Deflating	75
Dismantling	76
Filling and inflating	77
Testing	78
Leakage of fluid or loss of pressure	79

CONTENTS — *(continued)*

	Para.
ADJUSTMENT OF MAIN WHEEL UNITS —	
UP and DOWN latches	80
Hydraulic jacks	81
Method of setting main wheel unit doors	82
TAIL WHEEL UNIT —	
General	83
Removing tail wheel	84
Removing and refitting tyre	85
TAIL WHEEL SHOCK-ABSORBER STRUT —	
Fluid level check	86
Topping up with fluid	87
Inflation pressure check	88
Deflating	89
Dismantling	90
Re-assembling	91
Filling and inflating...	92
Testing	93
Leakage of fluid or loss of pressure ...	94
MISCELLANEOUS —	
Propeller feathering tests...	95
Vacuum system test cock...	96
Draining A.S.I. system	97
Landing lamp adjustment	98
Method of adjusting the bomb doors ...	99
Hand de-icing pump	100
Fixed aerial	101
Swinging D.R. compass	102
Sanitary closet	103

ILLUSTRATIONS

	Para.
Sketches in Text:	
Inboard section of aileron trailing edge showing position of trimming cords ...	17
Setting of fuselage push-pull controls ...	19
Exploded view of oil filter	35

	Fig.
Main Illustrations:	
Jacking complete aircraft	1
Jacking one main wheel	2
Jacking for removal of tail wheel	3
Access and inspection panels	4
Former and rib positions	5
Lubrication diagram — fuselage — tail unit	6
Lubrication diagram—main plane and rudder	7
Rigging instructions (1)	8
Rigging instructions (2)	9
Rigging control surfaces	10
Setting automatic controls	11
Main fuel system	12
Auxiliary fuel system...	13
Typical fuel cock details	14
Setting of fuel cock controls	15
Engine controls setting — inboard	16
Engine controls setting — outboard ...	17
Hydraulics — feed and undercarriage systems	18
Hydraulic system — flaps	19
Hydraulic system — bomb doors	20
Emergency air system	21
Pneumatic system	22
Diagram of pneumatic system	23
Main wheel strut inflation diagram... ...	24
Main wheel tyre inflation	25
Tail wheel strut inflation diagram	26
Tail wheel tyre inflation	27
Retracting strut locking mechanism ...	28
Main wheel shock absorber struts... ...	29
Tail wheel shock absorber strut	30
Hydraulic system fault location and rectification...	31
Alighting Gear Maintenance Tools:	
Spanner for damping valve assembly S.T.205	32
Spanner for gland nut S.T.699	33
Special adjustable spanner S.T.252	34
Screwdriver for ferrules S.T.721	35
Spanner for assembly for gland nut to sliding tube S.T.781...	36
Spanner for gland nut S.T.719	37
Plastic tube for assembly internal cylinder S.T.857	38
Guide sleeve for gland ring S.T.528 ...	39
Sealing plug S.T.784	40
Sleeve for assembly of gland ring into sliding tube S.T.720...	41
Test Clamp S.T.991	42

General Servicing

General

1. This chapter describes the servicing operations for certain components. Servicing notes on the electrical and radio equipment are given in Section 6.

FORMER POSITIONS AND INSPECTION PANELS

2. The positions of the fuselage formers and main plane ribs are shown in Fig. 5, and the inspection doors and access panels in Fig. 4. The layout of the assembly panels and the types of rivets used to secure them are shown in Section 5, Fig. 4.

JACKING

Method of Using Jacks

3. *Warning.*—In no circumstances is the aircraft to be jacked for ANY purpose entailing the raising of the main wheel(s) from the ground, in any condition in which the all-up weight exceeds 65,000 lb., with the jacking equipment (see Fig. 1) at present available.

4. It is important to ensure that the jacks are correctly positioned and used. The following points should be noted:—

(i) There are two jacking pad positions in each main plane (see Fig. 1). Normally, the outboard positions are used for complete jacking to give increased stability, unless it is required to retract the undercarriage. The inboard positions are used for undercarriage retraction tests, for jacking one side only and—in some instances—for salvage operations.

(ii) The telescopic leg is not used (see Fig. 1). The position of the jack trailing leg is important: when the outboard jacking position is used this leg must be inboard, and when the inboard jacking position is used the leg must be outboard.

(iii) When jacking on one side only, *e.g.,* for the removal of a deflated tyre, the jack body must be suitably tilted (see Fig. 2) before commencing to lift and the trailing leg must be adjusted throughout the operation.

(iv) When using jacks in pairs the trailing legs must be adjusted to act as struts and not used with loose adjustment.

Jacking Complete Aircraft

5. The complete aircraft should be jacked as shown in Fig. 1. The jacks must be positioned with the plane of the jacking legs parallel with the centre line of the aircraft, and steadying trestles and gantries placed under the outer planes as shown. The main wheels should be chocked and the tail wheel raised before the main jacks are operated.

Jacking for Undercarriage Retraction Tests

6. The method of jacking for undercarriage retraction tests is described in Fig. 1.

Jacking for Main Wheel Changing

7. A main wheel can be changed by jacking on one side only, but when this method is used it is important to follow the instructions shown in Fig. 2.

Jacking Rear End

8. For the method of jacking the aircraft to remove the tail wheel or to inflate the strut, see Fig. 3.

Jacking Sections of Aircraft

9. Instructions for jacking, trestling and slinging the sections of the aircraft are given in Section 5.

LUBRICATION

General

10. The lubrication diagrams are Figs. 6 and 7. All ball races are packed with grease on assembly and, with the exception of those marked "A", need periodical inspection. The ball races marked "A" are sealed, and no attention is necessary.

RIGGING

General

11. The main plane and tail plane are fixed cantilever structures, and can only be adjusted during the assembly of the component sections. Such adjustment may be required when reassembling with repaired or new sections, and is described in Section 5. Apart from this, the only rigging operations are

those for checking the fins, the movement of the control surfaces and the incidence and dihedral of the main plane and tail plane. Instructions are given for checking the mass-balancing of the movable flying control surfaces.

12. The aircraft is illustrated in rigging position in Fig. 8, which illustration also indicates the positions of the datum points and the setting boards. Rigging instructions are given, in brief, in Fig. 9.

Main Plane

13. The nominal incidence of the main plane is 4 deg., but during initial assembly the port intermediate and outer planes are given an additional incidence of 0 deg. 6 min., and the incidence of the starboard intermediate and outer planes is reduced by 0 deg. 6. min. to prevent the aircraft flying port wing low. The following tolerances are permitted for incidence variation (*i.e.*, twist) in a main plane:—

(i) The incidence variation on the complete span from tip to tip may not exceed 0 deg. 20 min.

(ii) The incidence variation in the centre section may not exceed 0 deg. 4 min. from end to end.

(iii) The incidence variation in each intermediate and outer plane from rib 1 to the tip may not exceed 0 deg. 8 min.

Tail Plane

14. The tail plane incidence is checked as shown in Figs. 8 and 9. A tolerance of 0 deg. 15 min. is permissible in the tail plane horizontal datum line.

Fins and Rudders

15. The hinge line should be vertical in the lateral plane and have 1 deg. 15 min. forward inclination in the fore-and-aft plane. A tolerance of ±0 deg. 15 min. is permissible in each plane. To check the fins, put the aircraft in flying position and proceed as shown in Fig. 9. It is important that the rudder trimming tabs are not twisted and that their hinges are so attached to the rudder that the hinge line forms a perfectly straight line parallel with the hinge line of the rudder, and that there is no backlash.

SETTING OF FLYING CONTROLS

General

16. Instructions for setting the flying controls are given in Fig. 10. Additional explanatory notes are given in the following paragraphs.

Ailerons

17. The two sections of each aileron should be lined-up with their undersurfaces equidistant from the undersurface of the main plane trailing edge. Initially, both ailerons should be set in the same relation to the outer plane, and packing up to $\frac{1}{8}$ in. thickness may be used under the aileron hinge brackets to obtain this condition. Further adjustment may be required after flight testing (see paragraph 21). With the control hand wheel central they should be set with their trailing edges in line with the outer plane trailing edges. The wing tip detachable trailing edge portions can be adjusted by packing to allow for any slight twist in the ailerons. The friction load in the aileron control circuit must not exceed 10 lb. applied at the root end of the trailing edge of one of the ailerons. Two feet of trailing edge cord (light alloy rolled edge strip, supplied in one-foot lengths, Part No. 34/F5628) is fitted initially on the upper and lower surface at the inboard end of the trailing edge of each aileron. The aileron balance tab should be fitted with lever (Part No. 10/F5429) having six holes for the attachment of the connecting rod, which should be set initially in the third hole from the top.

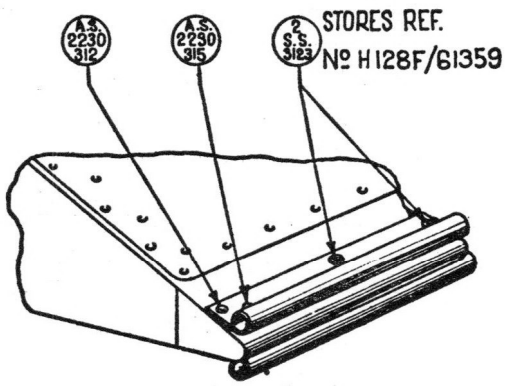

NOTE:- THE TWO RIVETS ATTACHING THE TRIMMING CORDS AT THE INBOARD END OF EACH AILERON ARE OF THE SOLID TYPE, PASSING THROUGH BOTH CORDS.

INBOARD SECTION OF AILERON TRAILING EDGE SHOWING POSITION OF TRIMMING CORDS.

Flaps

18. (i) *To connect inner flap tubes to jack.*—First ensure that jack is at end of stroke. This is indicated by the red line on port side being opposite to pointer. Then adjust ball end connection till flaps just close. Check that jack shaft has not moved during this adjustment.

(ii) *Open inner flaps.*—Close starboard outer flap and clamp. Raise inner flaps till trunnion can be connected. Then shorten connection to close inner flaps.

(iii) *Clamp inner flaps closed.*—Partly raise port outer flap and screw on connection trunnion. Shorten connection till port outer flap is completely closed.

(iv) Let the flaps, port and starboard, drop to the extent of one inch.

(v) Adjust the interconnection link at jack on port side until the port side flaps just touch the trailing edge, the starboard flap being maintained with 1 in. droop.

(vi) Pump flaps up by the hand pump and check whether starboard flaps close; a gap of .188 in. to .25 in. can be accepted.

Rudders and Elevator

19. The push-pull controls in the fuselage should not normally require further adjustment after the initial setting, but when adjustment is required it can be made at the points indicated in the accompanying sketch, similarly at formers 13 and 22 and at the outboard ends of the push-pull connections in the tail plane. The neutral position distances between the centre line of the bolts and the former face, at formers 13 and 22 respectively, are:—

Rudder control rod — $5\frac{7}{8}$ in. and $7^{25}/_{32}$ in.
Elevator control rod — $5^{3}/_{16}$ in. and $7^{5}/_{32}$ in.

To adjust, the joint is disconnected, the locknut slackened off and the eyebolt screwed in

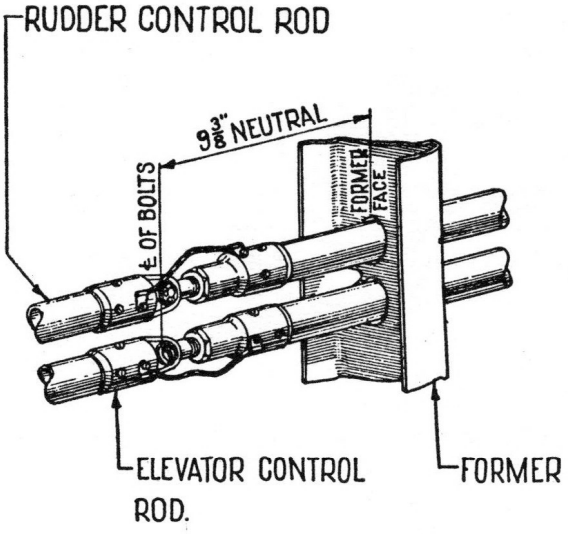

SETTING OF FUSELAGE PUSH-PULL CONTROLS

or out, as necessary. An inspection hole in the socket indicates the safe limit to which the eyebolt may be unscrewed.

Trimming Tabs

20. To adjust the aileron trimming tab control cables it is necessary to lower the flaps to gain access to the turnbuckles. A system of colour identification is used to ensure that the elevator trimming tab cables are correctly fitted. The ends of the cables are marked with blue or yellow bands at the turnbuckle joints and at the joints with the chains; the elevator spar and the trimming control mounting bracket are also marked.

Rectifying Defects in Trim

21. *Wing Low Due to Wing Faults.*—If the aircraft flies left wing low with spectacle held central, but is only slight (*i.e.*, up to $\frac{1}{2}$ in. measured at spectacle to counteract), aileron droop can be transferred in the following manner to correct:—

The static droop setting should be greater on port aileron than on starboard, with maximum difference of $\frac{1}{4}$ in. between ailerons; to correct for slight right wing low, transfer droop to starboard side. Maximum droop either side should not exceed $\frac{3}{8}$ in.

If the wing low requires more than $\frac{1}{2}$ in. at spectacle to correct, method of rectification is as follows:—

Decrease incidence on high wing and increase on low wing. To counteract for left

wing low lift front spar of port outer wing at root end; it is only possible to change incidence 6 min. up or down, and vice versa on starboard. In extreme cases, lift front spar of outer outer port wing, and vice versa starboard. Outer outer wing incidence can be varied up or down 9 min.

Note.—Cases have occurred where an aircraft has appeared to fly one wing low due to discrepancies in wing or wing tip incidence, but in actual fact it has been due to incorrect aileron setting statically with spectacle central. One aileron has greater droop than the other, which in the air will balance out, thus cocking the spectacle over. The cure is to apply equal droop with spectacle central.

Wing Low Due to Ailerons.—If, with neutral lateral trimmer, the ailerons tend to float—one up and one down—this will throw the aircraft wing low, and lateral trimmer has to be applied in order to bring the ailerons floating evenly and spectacle level. If the amount of trimmer applied is not more than $^{4}/_{12}$ths, then this can be cured by off-setting the aileron servos, *i.e.,* if starboard aileron floats down and port up, and this requires up to $^{4}/_{12}$ths trimmer to correct, then starboard servo must be off-set down, and port up. If the lateral trimmer required to float ailerons level is more than $^{4}/_{12}$ths and not more than $^{7}/_{12}$ths, then pack up the aileron which is floating down. If more than $^{7}/_{12}$ths, then also pack down the aileron which is floating up.

Packing an aileron up may affect the wing, *i.e.,* if starboard aileron is packed up this may cause the aircraft to fly left wing low on wing, and the rectification for wing low must then be applied.

It must be borne in mind that on an aircraft where the ailerons are on the heavy side the aileron trimmer is not so effective as when the ailerons are on the light side, therefore this fact must be taken into consideration when referring to degrees of aileron trimmer and the aileron loading ascertained from the pilot.

Trimming Corrections

When checking for trim, and this is always done at cruising conditions, *i.e.,* 2000 r.p.m., 21 lbs. boost, A.S.I.R. 190 m.p.h., approximately, the first thing to determine is whether the aircraft has a directional bias or not, and this is done by holding the aircraft laterally level by means of the control column and flying the aircraft rudder free on a course with the aid of the directional gyro and D.R. compass. When the machine has been trimmed out directionally to fly on a straight course, the trimmer reading is taken and noted on the test report. Until this has been done, it is useless to check lateral trim, as this is affected so much by the rudder. When the amount of rudder bias, if any, has been determined and the trimmer set to counteract it, then the lateral trimming is proceeded with.

If the aircraft is then flying left wing low or right wing low, this may be due to any of the following four causes:—

Aircraft Flying Right or Left Wing Low.—If the control spectacle is cocked to starboard or port, the cause is due to ailerons, and the amount of trimmer required to bring the control column central, and therefore trim the machine level laterally, should be noted.

If the aircraft is flying right or left wing low with the control spectacle held central, the bias is due to wing incidence. It is necessary then to apply ailerons by means of aileron trimmer to trim the machine level, and the position of the spectacle should then be marked.

If the aircraft is flying laterally level without any aileron trimmer being applied, but with the control spectacle cocked to port, port aileron then floating up, starboard down, the aircraft is right wing low on wing and left wing low on aileron, and one is counteracting the other.

If the aircraft is right wing low and the control spectacle is also cocked to starboard, starboard aileron up, port aileron down, and after applying aileron trimmer sufficient to trim the aircraft laterally level and spectacle is cocked to port, the aircraft is right wing low due to wing incidence, and also right wing low due to ailerons.

The degree of lightness in aileron control can only be determined when the rigging adjustments have been carried out to bring the amount of aileron trimmer required to obtain

lateral level flight down to a minimum. Aileron loading can be adjusted by—

(i) varying the gearing of the aileron servo; and

(ii) varying the aileron droop.

The standard setting of the aileron servo is with the operating rod in the third hole down on the servo king post. Dropping the operating rod further down the king post will raise the gearing and therefore make the ailerons lighter, and vice versa. The servos should then be reset to the neutral position in relation to the aileron trailing edge with aileron neutral. The standard droop setting is $\frac{1}{8}$ in. Decrease of droop will make the ailerons lighter, and vice versa. The limits of droop setting are NIL. to $\frac{3}{8}$ in.

The ailerons should be tested for self-centring, which is carried out in the following manner:—

At 180 m.p.h. I.A.S. the ailerons should be applied to about 50% of their total travel and then given controls free. The ailerons should return to the neutral position. If they fail to do so they can be improved by increasing the aileron droop, but if this cannot be improved with the maximum permissible droop, *i.e.*, $\frac{3}{8}$ in., then the amount of metal strips attached to the top and bottom of the inboard trailing edge of the inner ailerons must be increased. The maximum permissible total length of those strips is 4 ft.; the standard is 2 ft.

Note.—Friction in the aileron controls will have a marked adverse effect on the self-centring of the ailerons. The pilot should satisfy himself that the static friction of the ailerons is at minimum. This should not be greater than 10 *lbs. To move aileron up or down, measure at the inboard trailing edge of the aileron from the neutral position.*

The fore and aft trimming of the machine is, of course, carried out immediately after cruising R.P.M. and boost have been selected, and the number of twelfths on the indicator to correct for either nose or tail heaviness recorded. When final adjustments to the elevator servos have been carried out, it is usually found that the fore and aft trimmer reading at cruising R.P.M. and boost and in level flight is $^{2}/_{12}$ths correcting for nose heaviness to zero. The limits laid down for final readings are as follow:—

Fore and Aft.—From zero to $^{2}/_{12}$ths correcting for nose heaviness.

Lateral.—From zero to $^{2}/_{12}$ths correcting for either right or left wing low on ailerons.

Directional.—From zero to $^{1}/_{24}$th correcting for either port or starboard bias.

Fore and Aft.—As the C.G. at which production testing is carried out is slightly forward of normal, then aircraft can be cleared at cruising speeds with fore and aft trim from neutral to $^{2}/_{12}$ths tail heavy to counteract nose heaviness. If nose heavy, trim up to $^{4}/_{12}$ths; or, if tail heavy, trim in excess of $^{2}/_{12}$ths and up to $^{4}/_{12}$ths, then off-set the elevator servos. One turn on port and starboard servos will alter the trimmer setting $^{1}/_{12}$th. If more than $^{4}/_{12}$ths, then off-set the elevator trimmer not more than half-turn on the adjustments, which will have the effect of $^{4}/_{12}$ths on trimmer setting, and the remainder can be off-set on the servos. In very bad cases, it may be necessary to change elevators, due to a distorted elevator or elevators out of line with each other.

Directional.—If rudder trimmer has to be applied in order to fly straight, and when applied the rudders are central, the cause is off-set or distorted trimmer tabs or distorted fin shrouds to rudders. If, on the other hand, it is necessary to fly with the rudders to port or starboard in order to maintain straight flight, trimmer being used in order to carry the rudders over, then this is due to off-set fins, or possibly tail or mid-turret out of central position. In either case, this can be cured by off-setting the rudder trimmer tabs with trimmer control setting at zero.

All the above limitations are general, but may be affected by each individual aircraft's characteristics, and can only be adjudged by experience.

Setting of Automatic Controls

22. The setting instructions for the automatic controls are given in Fig. 11. For detailed information regarding automatic controls, Mk. VIII, see A.P.1469c, Vol. I.

MASS-BALANCING

General

23. The movable control surfaces are mass-balanced to prevent flutter or vibration. Accuracy of balance is vital to the safety of the aircraft, and should be checked as described in the following paragraphs if it is believed that it may have been affected by repairs or other causes.

Ailerons

24. Each inboard and outboard portion of the aileron should be balanced separately, and each should be nose heavy. To check that the overbalance is adequate, a $\frac{1}{4}$ lb. weight should be hung at the trailing edge, at rib 10 in the case of the inner portion, and at rib 18 on the outer portion. This should be the minimum weight required to balance the half-aileron, which should be completely free to float. If, when the weight is in position, the half-aileron is tail heavy, additional balance weights (Part No. 167/F5360) should be fitted to the peg provided in the nose until it is balanced. The peg is located in each case at the end where the operating mechanism is attached.

Elevators

25. Elevators should be checked complete, including the elevator trimming tab and its operating gear and the elevator balance tab and operating rod, which should be secured in a fore-and-aft position close to the underside of the elevator.

26. Each half of the elevator should be balanced separately, and for this purpose must be mounted on the datum (inboard) hinge and the outboard hinge only, the centre hinge being left free to float. This is necessary to prevent the balance being upset by any slight spring which may be present due to the hinges being not absolutely in line. The mass-balance is corrected by increasing or decreasing the weight carried in the mass-balance tube in the leading edge between the datum hinge and the inner end of the elevator. To open the tube, remove the screw and the plug at the hinge end. The lead weights inside (Part No. 16/G1337) can then be pushed through by inserting a rod in the hole at the inner end of the tube. The maximum permissible variations from static balance, in which condition the elevator will float horizontally, are:—

(i) A weight not exceeding $\frac{1}{2}$ lb., when placed on the trailing edge at rib 3 (*i.e.*, at a distance of 37 in. from the hinge centre) suffices to lower the trailing edge to the horizontal.

(ii) The reading of a spring balance at the same position does not exceed 1 lb. to raise the trailing edge to the horizontal.

Rudders

27 and 28. This information will be issued later.

ENGINE INSTALLATION

FUEL, OIL AND COOLANT SYSTEMS

Fuel Tank Servicing Cocks

29. A hand operated stop cock in the delivery line from each fuel tank enables any tank to be isolated for servicing. All the servicing cocks are mounted in the valances of the undercarriage compartments, one in each inboard valance for the No. 1 tanks, and those for the No. 2 and No. 3 tanks in the outboard valances. Access panels, secured by screws, are provided inside the undercarriage compartments, and the cocks are so positioned that the panels cannot be replaced unless the cocks are in the OPEN position. The panels are painted red, and are marked, ACCESS TO SERVICE FUEL COCKS.

Draining the Fuel Tanks

30. A draining valve through which, in conjunction with operation of the appropriate servicing cock or cocks (see paragraph 29) any tank, combination of tanks or the whole fuel system may be drained, is mounted on the front spar in the port inboard nacelle. This valve, which is wire locked, is fitted in the cross-feed line, and when it is required to drain any of the starboard tanks the cross-feed cock in the fuselage must be opened. Before a drain pipe can be attached to the $1\frac{1}{4}$ in. B.S.P. male connection of the drain valve, a screw cap, secured by a split pin, must be removed. As the use of the relevant pulsometer pumps is necessary for draining, provision should be made for a ground

electric supply to be available. The valve is labelled OPEN STARBOARD, CLOSED and OPEN PORT, enabling either side of the fuel system to be drained separately. *After draining, the drain valve must be returned to CLOSED* and wire locked, and the cap and split pin replaced. It would not be possible to cross-feed in flight if the cock was otherwise positioned.

Draining the Distributor Tanks

31. Each distributor tank has two small drain cocks, primarily to enable any accumulation of water to be drawn off, but also to drain the fuel content. The draining of any accumulation of water should be carried out during each daily inspection.

Cleaning the Fuel Tanks

32. (i) Drain the fuel system (see paragraph 30).

(ii) Remove the tank (see Section 5).

(iii) (a) On No. 1 tanks, remove all access doors, sumps and pipe connections.

(b) On Nos. 2 and 3 tanks, remove the manhole covers only.

Note.—The Nos. 2 and 3 tanks, which are the collapsible type, should be handled with special care to avoid creasing or distortion, with possible damage to interior fittings.

(iv) Flush out the interior with filtered petrol by spraying the petrol on the walls of the tank.

(v) Drain off the flushing petrol.

(vi) Clean any fittings removed and refit them to the tank.

(vii) Refit the tank (see Section 5).

Draining the Oil Tanks

33. Each oil tank has a drain cock, which is opened by partly unscrewing the plug in the side. Before draining, connect a suitable hose to the drain cock and open the filler cap.

Cleaning the Oil Tanks

34. (i) Drain (paragraph 33) and remove (Section 5) the tank.

(ii) Plug all holes.

(iii) Remove the access door in the tank.

(iv) Wash out the tank by spraying with flushing oil, D.T.D. 392 (R.A.A.F. Stores Reference No. K2/197), and finally, spray the sides with petrol.

(v) Drain off the flushing oil and the petrol. Make sure that the petrol is all cleared away before filling the tank with new oil.

(vi) Refit the access door in the tank and refit the tank (see Section 5).

Cleaning the Oil Filters

35. To clean the oil filter:—

(i) Remove the locking wire and unscrew the hand screw.

(ii) Turn the special nut through 90 deg. until the arms coincide with the slots in the casing, and remove the hand screw and nut.

(iii) The filter element will now slide out under the pressure of the spring-loaded plunger, which descends and seals the oil inlet. Should the element stick, it may be released by grasping the projection at the bottom.

(iv) Clean the inside of the filter and the element with flushing oil, D.T.D. 392 (R.A.A.F. Stores Reference No. K2/197), and finally, flush with filtered petrol.

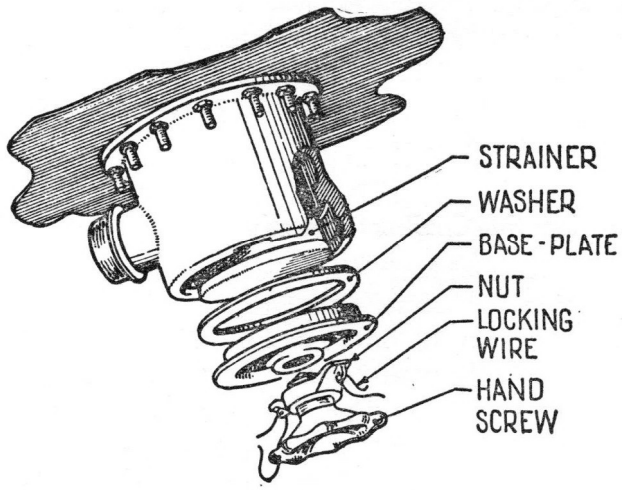

EXPLODED VIEW OF OIL FILTER.

Draining the Cooling System

36. Draining must not be attempted unless the coolant temperature is below 65°C., as the internal pressure caused by a higher temperature makes it unsafe to remove the filler caps or drain plugs. To drain the whole system:—

(i) Remove the filler caps.

(ii) Remove the drain plugs at the bottom of the radiators. (These are accessible through the door in the bottom panel.)

(iii) On either inboard system, open the pet cocks of the cabin heating radiators and at the end of the bleed connections. The latter are positioned as follows:—

(a) For the port system, on a panel in the bomb compartment, on the underside of the main floor just forward of the front spar.

(b) For the starboard system, near the Avery couplings between the starboard undercarriage beams.

(iv) Complete the draining of the cabin heating radiators through the plug in the base.

37. The cabin heating radiator in the fuselage (port inboard system) can be isolated and separately drained if the two stop cocks under the front spar cover are turned OFF. To drain the starboard cabin heating radiator entails partly draining the whole system, as this radiator cannot be isolated. For detailed notes on the engine cooling systems, see A.P.2861A, Vol. I.

Filling the Cooling Systems

38. The aircraft must be in the tail-down position for filling either the main or intercooler systems. Care must be taken to avoid splashing of coolant, since glycol will damage rubber covered cables. The procedure is to—

(i) Check that the drain plugs at the bottom of the radiators are in place, and that the drain cock in the base of the coolant pump bowl is closed.

(ii) Unscrew and remove the main header tank filler cap and fill the system until the coolant is level with the lower edge of the filler orifice.

Note.—It is not necessary to open any vent plugs when filling the outboard systems. On the inboard systems, the pet cocks (paragraph 36, sub-paragraphs (iii) (a) and (b)) on the cabin heating radiators and on the bleed connections must be opened. On the port inboard system, check that the stop cocks under the front spar cover are open.

(iii) Unscrew and remove the intercooler header cap and fill the system until the coolant is level with the lower edge of the filler orifice.

(iv) Replace the filler caps and run the engine for a short period at about 1000 to 1200 r.p.m to circulate the coolant and sweep out any small air pockets in the system. Throttle back and switch off before the coolant outlet temperature exceeds 40°C.

(v) Remove the filler caps and, if necessary, add sufficient coolant to restore the levels in the header tanks. Replace and wire lock the filler caps.

FUEL CONTROL COCKS

General

39. The fuel control cocks comprise—

(i) Four master engine cocks, two on each fuel distributor tank.

(ii) Six ground servicing cocks, in the valances of the undercarriage compartments. On each inboard nacelle, the inboard valance contains the No. 1 tank cock, and the outboard valance the No. 2 and No. 3 tank cocks.

(iii) One cross-feed cock, on the floor in the fuselage just forward of the front spar.

(iv) One drain cock, on the front spar in the port inboard nacelle.

(v) Two auxiliary fuel system cocks, behind the front spar in the fuselage.

40. Dismantling of the cock valves should be avoided if possible and, in any case, restricted to the minimum necessary for effective servicing. When any of the valves are dismantled, it is most important—

(i) To ensure complete cleanliness, since the presence of foreign matter will cause permanent loss of seal.

(ii) That the parts be kept in sets, as the internal parts of each valve are matched.

(iii) That the seal on the external end of the spindle is not disturbed.

41. As all these cocks are of similar construction, one only has been illustrated (see Fig. 14). The following general instructions apply to them alike:—

(i) Dismantling and examination:—

(a) Examine the exterior for damage and evidence of leakage.

(b) Remove all external dirt and dust.

(c) Turn the valve into the open position (*i.e.*, with the ports in the body and plug communicating).

(d) Remove the cotter pin (A) from the control handle or lever, using extractor (5376A). Pull off the control. From the cross-feed cock remove the stop collar in like manner.

(e) Note the position of the cotter groove(s) in relation to the stops.

(f) Secure an assembly fixture—1316/F13 for a master engine cock, 3362/F10 for a service cock or cross-feed cock, 3194/F1 for a drain cock, 2734/F13 for an auxiliary system cock—in a bench vice and place the valve in a fixture. Alternatively, secure the valve in a bench vice, gripping lightly by the hexagons only (see Fig. 14).

(g) Remove the seal and locking wire. Unscrew the base cap (G), using a ring spanner (SF1129/B) for a master cock or auxiliary system cock, SF1129/C for a service cock, cross-feed cock or drain cock, exerting pressure with the palm of the hand so that the last thread will not suffer damage as the cap comes out.

(h) Remove the spring and the thrust member.

(j) Take great care in removing the valve plug (F). Invert the valve with the open end in the palm of the hand and release the plug by a slight rotation of the spindle (grip the spindle in a fibre-jawed vice, or temporarily attach the handle for this purpose). Lift the body (B) clear of the plug and remove the slipper (E) from the plug. Examine the plug, wiping the conical surface dry with a clean hand; rag must not be used. The surface should have a continuous smooth finish free from scratches and the edges of the ports should be free from burrs.

(k) Similarly examine and clean the conical surface of the insert in the valve body.

(l) Remove the spindle (C) by pressing it into the valve body, taking care not to damage the insert. Examine the gland rings (D), which should be resilient and show smooth, continuous edges.

Note.—Do not attempt to remove the screw from the centre of the spindle. This screw has been adjusted to maintain the slipper in correct contact with the valve plug with a small amount of backlash to ensure seating of the conical surfaces of the plug and liner. The seal at the external end of the spindle should not be disturbed.

(ii) To renew damaged gland rings on the spindle:—

(a) Cut out the old gland ring (D) with a knife.

(b) With clean petroleum jelly, lightly grease a gland assembly tool (SF.112/B) and slide a new gland ring towards the large end. Place the tool over the spindle end and slide the gland into its groove. The concave face of the ring should be next to the sloping wall of the groove.

(iii) To reassemble the valve:—

(a) Place the slipper (E) astride the spindle tongues, retaining with clean petroleum jelly. Press the spindle (C) by hand into its bearing as far as possible. Grip the small end of the spindle in a fibre-jawed vice and pull the body (B) on to the spindle with a semi-rotary movement. Leave the cotter groove in the position noted when dismantling.

(b) Clean the tapered bore of the valve with a dry finger, and support as for dismantling

(c) Clean the valve plug (F) with a dry hand and, fingering the conical surface as little as possible, drop it into the body so that the "V" groove engages the slipper (and, in the case of the drain cock, so that the ports in the plug agree with the marking on the spindle end).

(d) Replace the thrust members and firmly screw home the base cap (G). Re-wire the cap.

(e) Secure the stop collar (when fitted) and control handle or lever.

(f) Operate the valve by hand and "feel" that the operation is correct and that the essential backlash is present. (See *Note,* paragraph 41 (i).) Check the alignment of ports.

(g) Apply pressure test (see paragraph 42).

Pressure Tests

42. After re-assembly each valve should be pressure-tested with petrol or paraffin for external leakage and for leakage past the valve plug:—

(i) *External leakage.*—With the outlet(s) blanked off and an inlet coupled to a pump giving an output of 15 lbs. per sq. in., there should be no leakage from any gland or joint for each operational position of the valve.

(ii) *Leakage past valve plug.*—To each inlet union in turn, with the valve closed to that union, connect a pump giving an output at 15 lbs. per sq. in. Leakage past the valve plug should not exceed five drops per minute, after allowing five minutes for settling down.

ENGINE AND FUEL COCK CONTROLS

General

43. The control levers, chains and tie-rods normally need adjustment only after the dismantling of components. The following paragraphs give general instructions for rigging the engine and fuel cock controls. For details of the controls in the power plant, see A.P. 2861A, Vol. I.

Throttle and Propeller Controls

44. The vertical position of certain levers (see Figs. 16 and 17) relate to the aircraft in

rigging position. The front spar web and the engine firewalls also are vertical in this position.

(i) Set the levers on the pilot's control quadrant to the mid-travel position.

(ii) On the inboard engine control boxes on the front spar, set the levers as follows to obtain the mid-travel position (see Fig. 16):—
Throttle lever 5 deg. forward of vertical.
Propeller lever 21 deg. forward of vertical.

(iii) On the outboard engine control boxes, set the levers as follows (see Fig. 17):—
Throttle lever 35 deg. forward of vertical.
Propeller lever 50 deg. forward of vertical.

(iv) Connect up all chains on the sprockets so that the chain ends are approximately equidistant from the sprockets. Attach the tie-rods and adjusters and take up all slack.

(v) On the inboard and outboard engine firewalls, if the length of the adjustable levers on the upper countershaft has not been disturbed, the existing setting should be retained. Otherwise as a preliminary measure the levers should be adjusted to a length of $3\frac{1}{2}$ in. measured from the centre of the shaft to the centre of the connecting rod attachment.

(vi) On the inboard engine firewalls, set the levers for the rods passing through the wall as follows to obtain the mid-travel position:—
Throttle lever 20 deg. forward of vertical.
Propeller lever $2\frac{1}{4}$ deg. forward of vertical.

(vii) On the outboard engine firewalls set the levers as follows:—
Throttle lever 47 deg. forward of vertical.
Propeller lever $33\frac{3}{4}$ deg. forward of vertical.

(viii) Fit the connecting rods between the levers at the front spar and the top countershaft, adjusting the lengths of the rods to suit the positions of the levers as previously set.

(ix) On the lower countershaft on the firewall, set the single lever horizontally for mid-travel position, and fit the connecting rod between the two countershafts, adjusting it to suit the positions of the levers.

(x) Pull the control levers in the cockpit to the fully-back position and set the control levers on the engine against the rear stops.

(xi) Connect the rods between the engine controls and the levers on the countershafts on the firewall (see Figs 16 and 17), adjusting the length of the rods as required.

Note.—The double lever on the lower countershaft is shown in the illustrations with the upper arm connected, as required for Merlin 85 engines.

(xii) Move the cockpit levers to the fully forward position and check that the levers on the engine are against the forward stops. The levers may be checked at the forward and rear stops by ascertaining that a piece of thin paper placed on the stop is trapped by the lever when the cockpit lever is pushed fully forward or pulled fully backward.

(xiii) Make any adjustments required on the control connections on the engines (see A.P. 2861A, Vol. I).

(xiv) If required, adjust the lengths of the levers on the upper countershaft on the firewall and the lengths of the connecting rods between the spar and the firewall.

Boost Cut-Out Control

45. This control is fitted on Lincoln Mk. 30 aircraft, but is inoperative.

Fuel Cock Controls

46. To set the fuel cock controls between the levers on the pilot's quadrant and the sprocket assemblies on the front spar, set the levers and the Teleflex connections at mid-position, connect up the chains and tie-rods with the chain ends approximately equidistant from the sprockets, and take up all slack. The setting of the Teleflex controls between the front spar and the fuel cocks is shown in Fig. 15. For information regarding Teleflex controls see A.P. 1464B, Vol. I, Part 5, Sect. 6, Chap. 6 (Old Publication) or A.P. 1464D, Vol. I, Part 2, Sect. 2, Chap. 3 (New Publication).

HYDRAULIC SYSTEMS

General

47. Installation diagrams of the general service hydraulic system circuits are given in Figs. 18 to 21 inclusive (see also Sect. 9). For the turret services, see Sect. 12. In all servicing operations on the hydraulic system absolute cleanliness is essential. Clean fluid only must be used when filling or topping up, and the containers, funnels, etc., used for holding the fluid and for the reception of drained fluid must be scrupulously clean. After a container has been carefully cleaned it should be swilled out with a small quantity of clean fluid, which should then be thrown away.

48. Whenever pipes are disconnected, the unions and pipe ends should be blanked off against entry of dirt, and when drain plugs or other components are removed they must be carefully examined to see that they are free from dirt before being re-assembled. Any length of new pipe or a new coupling should be thoroughly flushed out to ensure freedom from dirt before being fitted.

Filling

49. The following is the procedure for filling the complete circuit:—

(i) Jack the aircraft (see Fig. 1).

(ii) Fill the hydraulic reservoir with fluid as specified in the Leading Particulars.

(iii) Drain the No. 1 fuel tanks (para. 30).

(iv) Open the jettison door in the No. 1 tank access panels and allow the jettison pipes to extend.

(v) Seal the supply and return lines by slackening the Avery self-sealing couplings on the stay between each pair of undercarriage support beams.

(vi) Release the hose connections at each general services pump and connect a standard ground test rig, Stores Ref. W4A/11263, having a pump of the same type as that on the aircraft (see A.P. 2306B). Tighten the Avery couplings.

(vii) Set the undercarriage and bomb door controls in the UP position, and the flaps control in the neutral position.

(viii) Commence to fill the system by running the test rig at its lowest speed, at the same time maintaining the fluid level in the reservoir. It is important to screw down the reservoir cap while operating any circuit, and to fill—when necessary—with the test rig stopped.

(ix) Operate the undercarriage circuit at least twelve times to ensure that all air has been expelled.

(x) Operate each of the remaining systems several times to fill completely both sides of the jacks and the jettison system.

(xi) Inflate the hydraulic accumulator to the pressure given in the Leading Particulars.

(xii) Re-pack the jettison pipes as described in para. 61.

Bleeding

50. The system should be bled after any component has been removed or a new length of pipe inserted, and during this operation the aircraft should be jacked. Connect the ground test rig (see para. 49 (v) and (vi)).

To Bleed the Main Wheel and Bomb Door Circuits

51. (i) Set the main wheel and bomb door control valves in the UP position.

(ii) Disconnect the jack piston rods from the bomb doors, and the operating links from the undercarriage doors.

(iii) Pump with the ground test rig until the jacks are fully closed, then switch off the test rig.

(iv) Slacken off the bleed plugs on the rod side of the piston.

(v) Pump with the aircraft hand jump until air bubbles cease to appear and fluid is ejected.

(vi) Tighten and lock the bleed plugs.

(vii) Top up the reservoir.

(viii) Move the main wheel and bomb door control valves to the DOWN position.

(ix) Repeat (iii) to (vii), noting that the jacks will now fully extend, and slackening the bleed plugs on the piston head side of the jacks.

(x) Reconnect the jack piston rods to the bomb doors, and the operating links to the undercarriage doors.

To Bleed the Flap Circuit

52. (i) Move the operating lever on the control valve to the flaps DOWN position.

(ii) Pump with the ground test rig until the stroke is completed and switch off the test rig.

(iii) Slacken off the bleed plugs at the end of the jack into which fluid is being fed.

(iv) Pump with the hand pump until air bubbles cease to appear and fluid is ejected.

(v) Tighten and lock the bleed plugs.

(vi) Move the operating lever of the control valve to the flaps UP position.

(vii) Repeat the procedure, (ii) to (v), this time slackening off the bleed plugs at the opposite end of the jack when the stroke is completed.

Operational Tests

53. When the system has been filled and bled it is necessary to test each circuit. Before any operational tests are carried out it is necessary to jack the aircraft and connect the ground test rig (see para. 49 (v) and (vi)). No leakage should occur in the delivery pipes under full operational pressure. The circuits should also be tested by the hand pump in conjunction with their respective control valves.

Main Wheel Units

54. (i) To retract, release the spring catch and move the control valve lever to the UP position.

(ii) To lower, move the control valve lever to the DOWN position. When the jacks are fully extended the retracting strut joint should lock in the DOWN position.

Flaps

55. (i) To lower, move the operating handle to the DOWN position; when the desired angle is reached, return the handle to the neutral position and the movement of the flaps should stop immediately.

(ii) To raise, move the operating handle on the control valve from the neutral position to the UP position. When the desired angle is reached or the flaps are in the fully UP position return the handle to the neutral position.

Bomb Doors

56. (i) To lower, move the control valve lever to the DOWN position. To raise move the control lever to the UP position. For the method of adjusting the bomb door jacks, see para. 99.

Fuel Jettison System

57. The jettison system should be operated at least once a month to prevent the synthetic rubber rings sticking to the valve piston barrels and spindles. For this purpose, the No. 1 fuel tanks should be empty. If it is desired not to drain the tanks, refer to para. 59.

58. To operate the system, move the lever on the pilot's floor from NORMAL to JETTISON position. Check that the jettison and air valves are now open. Return the lever to NORMAL position and check that the valves have closed (see para. 60). After operating the system, re-pack the jettison pipe as described in para. 61.

59. To operate the system without first draining the tanks:—

(i) Withdraw the release pin allowing the jettison door to hinge away and the jettison pipes to extend.

(ii) Place a 50-gallon container beneath each pipe.

(iii) Check that the accumulator gauge shows not less than 700 lb. per sq. in. If necessary, operate the hand pump until it does.

(iv) Operating the control quickly, so as to jettison the minimum amount of fuel, move the lever to JETTISON, then return it to NORMAL, at the same time, carefully check the operation of the air inlet valves.

(v) Allow the jettison pipes to dry; then replace the pipes and reset the valves as described in para. 61.

60. If the air inlet valve has stuck in the open position after the jettison system has been tested:—

(i) Ensure that the jettison control handle on the pilot's floor has been returned to NORMAL.

(ii) Open the inspection door in the top skin of the main plane, above the hydraulic pipe connection in the top of the fuel tank, and remove the drilled plug from the jettison system air vent. Connect an air pump or other source of compressed air supply to the $\frac{1}{4}$ in. B.S.P. female connection exposed by the removal of the plug.

(iii) Apply increasing air pressure until the valve closes. The pressure must not exceed 850 lb. per sq. in.

(iv) Disconnect the air line and replace the drilled plug in the vent.

Note.—This operation does not ensure that the valve will not stick the next time the jettison system is tested, and it may be necessary to close the valve by this method on each occasion.

Resetting the Jettison Valve

61. When the fuel jettison system has been operated it is necessary to reset the valve as follows:—

(i) Ensure that the jettison pipe is dry between the double walls, to avoid deterioration due to prolonged contact with the fuel. To dry the pipe after it has drained, close and re-open it several times, repeat the process five minutes later, and allow the pipe to dry in the extended position for a further 30 minutes.

(ii) Check that the air vent valve is correctly closed (see para. 60).

(iii) See that the jettison lever in the cockpit is in the NORMAL position.

(iv) Pack the jettison pipe as carefully as possible into the pipe casing and swing the door back into place. Ascertain that the pulley which, on final assembly, is riveted to the door, is in such a position that the cable hangs vertically in line with the centre of the valve mechanism and just touches the smallest diameter of the pulley. If the existing petrol tank is replaced or moved, the pulley assembly will probably require re-positioning, in which case the old base plate assembly, Item 2/F.5939, must be removed and replaced by a new assembly. It should be noted that the forward edge of the door must be inset a minimum of $^{3}/_{32}$ in. into the main plane surface.

(v) Replace the release pin, making sure that it is a tight fit in the eyepiece (20/F.5157) when held by the "spring" of the hasp (3/F.5934) after the door is closed. The hasp must be adjusted by slight bending to ensure this tight fit and a horizontal loading of approximately 20 lbs. on the cable must *just* pull out the release pin. The cable must not be taut when assembly is

complete, but must be capable of slight up and down movement without moving the pin horizontally in the eyepiece. When testing the above, the jettison door must be pushed upwards to take up any internal clearance on the door frame which would be taken up by air load during flight. It is essential that the release pin is located in the hasp by the groove in the pin when adjustment is completed.

*Note.—This jettison valve is described and illustrated in A.P.*1803, *Vol. I.*

Faults and their Remedies

62. Faulty operation of the hydraulic system may be caused by mechanical defects, as well as by faults in the system itself. Faults can usually be traced by noting the behaviour of each hydraulic circuit, and this must be done before removing a component from the aircraft. If any circuit responds correctly to both the engine-driven pumps and the hand pump, it follows that the pumps are satisfactory. A study of the diagram of the system (see Section 9), together with evidence obtained from the working of the system, will usually suffice to locate the fault. A list of likely faults, their causes and the remedial action, is given in a trouble tracing chart (see Fig. 31).

Servicing of Components

63. For the servicing and testing of hydraulic components, see A.P. 1803, Vol. I.

Cleaning Hydraulic Fluid Filter

64. A high-pressure filter is fitted on the rear face of the front spar on the port side of the fuselage. When it is necessary to clean this filter:—

(i) Relieve all pressure in the system.

(ii) Drain the fluid from the filter by removing the plug at the bottom.

(iii) Unscrew the bottom half of the filter.

(iv) Withdraw the filter element and the by-pass spring.

(v) Unscrew the wing nut at the bottom of the filter element, remove the end cages and take the filter element out of the perforated cylinder.

(vi) Remove the spring clip from the filter element and unroll the element.

(vii) Thoroughly wash the element, also the filter casing and the spring, in filtered petrol.

(viii) Re-roll the element and refit the spring clip.

(ix) Replace the element in the perforated cylinder, and refit the end cages and wing nut.

(x) Screw in the drain plug two or three threads.

(xi) Replace the filter and by-pass spring, checking by feel that the spindle of the wing nut is located in the drain plug.

(xii) Screw together the halves of the filter.

(xiii) Tighten the drain plug.

ALIGHTING GEAR

General

65. The main wheel units and the tail wheel must be kept clean and free from mud, particularly at the knee joints on the retracting struts. In wet weather this joint should be cleaned and lubricated after each flight. When the main wheel units are down and the aircraft is resting on the wheels, jury struts, Part No. 1/U.631 (Stores Ref. A73/10206), must be fitted between the top joint of the shock-absorber strut and the joint at the centre of the retracting strut. These will enable towing or servicing to be done without any danger of inadvertent retraction of the main wheel units.

MAIN WHEEL UNITS

General

66. The main wheel unit is illustrated in Sect. 7, Chap. 5, the hydraulic operating and emergency lowering systems are shown in Figs. 18 and 21, and the method of setting the undercarriage doors is described in para. 82. For special tools needed to service the undercarriage see Figs. 32 to 41.

67. The alignment of the retracting struts in the DOWN position, with fluid pressure applied to the jacks at the cutting-out pressure of the system, is so adjusted that the hinge pin of the knuckle joint is not more than 0.20 in. below, or 0.10 in. above, a line joining the hinge pins at each end of the strut. The amount is checked by means of a thread stretched between the hinge pins.

Removal of Wheel

68. To remove a main wheel, the aircraft should be jacked as shown and described in fig. 2. When the aircraft is in this position:—

(i) Disconnect the pneumatic brake pipe at the bottom of the flexible tubing.

(ii) Support the wheel with blocks of wood.

(iii) Remove the setscrew in the locking plate which locks the stud (fig. 29, item 10), and remove the plate.

(iv) Unscrew the stud (10) and remove the bolt and saddle washers.

(v) Lower the wheel and axle, and remove the packing blocks from the ends of the axle.

(vi) Remove the six nuts and bolts securing either brake shoe carrier to the axle, and pull off the carrier.

(vii) Drive out the axle, with the remaining carrier attached, from the wheel hub.

Note.—When refitting main undercarriage wheels, ensure that the inlet ports of the brake cooling vanes are on the port side of each wheel so that the braking mechanism will receive the maximum cooling effect. The inlet ports, being longer than the outlet ports, are easily distinguishable.

Removing and Refitting Tyre

69. The procedure is described in A.P. 2337, Vol. I.

MAIN WHEEL SHOCK ABSORBER STRUTS

General

70. The main wheel shock-absorber struts are illustrated in Fig. 29. For the method of filling the struts with fluid, see paras. 73 and 77, and for inflating the struts, see para. 74. The fluid to be used is D.T.D. 585 (Stores Ref. K2/138).

Inflation Adaptor

71. The standard inflation adaptor (Stores Ref. W4C/20938) can be used.

Fluid Level Check

72. The level should not be checked immediately after landing or taxying. To check the level proceed as follows:—

(i) With the aircraft standing on its wheels, remove the dust cap from the inflation valve, and fit the inflation adaptor (see Sect. 4, Chap. 2, fig. 4).

(ii) Allow air to escape gradually by screwing up the gauge head and slowly unscrewing the air release screw until the struts are fully compressed.

(iii) If, in the final stage of compression, a spray of fluid and air is blown off, the fluid level is correct, and the strut may be re-inflated (see para. 74).

(iv) If only air is blown off, the level requires topping up (see para. 73).

Topping Up with Fluid

73. If the fluid level needs topping up (para. 72):—

(i) With the aircraft standing on its wheels and the shock absorbers fully closed connect the inflation valve to a component test rig, using an inflation adaptor.

(ii) Pump fluid into the strut until the pressure begins to rise rapidly. Do not allow the pressure to exceed 2,325 lb. per sq. in.

(iii) Slowly release the pressure by screwing up the adaptor gauge head and unscrewing the release screw, and make the check indicated in para. 72 (iii). If necessary, pump in more fluid and repeat the pressure releasing operation until a spray of fluid and air is blown off.

(iv) Disconnect the test rig and connect the adaptor to an air pump.

(v) Inflate to the correct pressure at full extension (see Leading Particulars).

(vi) Remove the air pump and inflation adaptor and replace the inflation valve dust cap.

Inflation Pressure Check

74. To check the pressure proceed as follows, with the aircraft standing on the ground:—

(i) Remove the dust cap from the inflation valve, connect the inflation adaptor (see Sect. 4, Chap. 2, Fig. 4) and test the air pressure in the struts.

(ii) Measure the extension of the strut and compare with the dimension given in the table (see Fig. 24).

(iii) If the pressure is below the minimum given for the corresponding dimension close the inflation valve, remove the dust cap from the end of the adaptor and attach an air pump. Re-open the inflation valve and inflate the struts, checking the dimension at intervals, until the pressure and extension are within the limits given in the table.

(iv) Close the inflation valve, disconnect the adaptor and replace the dust cap on the inflation valve.

Deflating

75. To deflate the strut, remove the dust cap and fit an inflation adaptor. Release the pressure by screwing up the gauge head and unscrewing the air release screw.

Dismantling

76. *WARNING.—On no account should any bolts or connections, etc., be removed without first deflating the struts. Failure to observe this precaution may result in a serious accident.* Dismantling should only be necessary after a long period of service or after accidental damage. The following is the sequence of operations involved in dismantling a strut (see Fig. 29) which has been removed from the aircraft:—

(i) Deflate the struts (see para. 75).

(ii) Unscrew the balance pipe union nuts, disconnect the bracing and separate the struts.

(iii) Unlock and remove the inflation valve (1) and the balance pipe connection (2).

(iv) Unscrew the ferrules from the two screwed rods (13) and remove the two setscrews to free the end fitting (14) and inner cylinder assembly from the main outer tube.

(v) Withdraw the shock-absorber assembly, together with the lower sliding member (8) from the top of the main outer tube. Slide down the distance piece (27) until the locking screw (30) is accessible through the clearance hole in the sleeve. Remove the locking screw.

(vi) Unscrew the lower sliding member (8), then remove the locking pin and unscrew the stop nut (31) to free the fitting (29).

(vii) Remove the screw, securing the fluid cylinder (26) to the piston rod (23), unscrew the cylinder from the piston rod and remove the cylinder. Unscrew the damping valve assembly (22) from the end of the air chamber (16) using spanner S.T. 205 (Stores Ref. T27Q/6026).

(viii) Slide the damping valve assembly (22) off the piston rod (23) and unscrew the cover plate of the valve assembly to free the valve.

(ix) Unlock and unscrew the gland nut (17) using spanner S.T. 699 (Stores Ref. No. T27Q/6233).

(x) Remove the spacer rings (18) and gland ring (19).

(xi) Remove the circlip locking end cap (33) and unscrew the end cap, using spanner S.T. 252.

(xii) Unlock and remove the grease nipples and studs from the attachment sleeves (4) and (7), and unscrew sleeve (7) toward the bottom of the main outer tube. Withdraw the sleeves (4) and (7) and unscrew them from each other.

(xiii) The bronze liner (32) is not to be removed from the outer tube (3). If necessary, a new tube (3) complete with liner (32) must be fitted.

Filling and Inflating

77. When, after complete dismantling, the strut requires filling with fluid, the following instructions must be carefully carried out for each strut separately (see Fig. 29).

(i) With the fluid cylinder and air chamber sub-assembly complete, the balance pipe connection and inflation valve fitted, insert the strut upright in test clamp S.T. 991 (Stores Ref. No. T27Q/20147) (see Fig. 42), set the sliding member within the limits of its travel, and attach a component test rig to the balance pipe connection.

(ii) Pump in fluid until the pressure rises rapidly. It must not exceed 2,325 lb. per sq. in.

(iii) Allow fluid and air to drain from the unit by gently operating the test rig control valve.

(iv) Repeat operations (ii) and (iii) until a flow of fluid only is obtained, and test to 2,325 lb. per sq. in.

(v) Fully compress the strut, allowing all surplus fluid to drain completely.

(vi) Keeping the strut fully compressed, inflate to 50 lb. per sq. in. Disconnect the pump and depress the valve, thus blowing off any surplus fluid.

(vii) Complete the reassembly of the strut, taking care not to lose any fluid, and then reinflate to 50 lb. per sq. in.

(viii) Apply the check described in para. 72.

(ix) Finally, after filling both struts, connect the bracing and the balance pipe, and inflate both struts through either inflation valve to the correct pressure at full free extension (see Leading Particulars).

Testing

78. With the unit deflated, connect a component test rig through the inflation adaptor, and pump in fluid to a pressure of 2,325 lb. per sq. in. This pressure should be maintained. Any fall in pressure unaccompanied by visible leakage at the sealing washer under the inflation valve will be due to leakage:—

(i) At the top end of stack pipe (fig. 29, item 15). Leakage will be visible on removal of the end cap (14).

(ii) At the gland ring (19). Fluid may eventually appear at the bottom of the main outer tube (3).

Leakage of Fluid or Loss of Pressure

79. (i) If leakage occurs round the sealing washer under the inflation valve, tighten the valve body. If this is ineffective, deflate the strut, remove the valve and renew the washer.

(ii) If leakage occurs from the inflation valve itself, deflate the strut and renew the complete inflation valve unit.

(iii) Should leakage occur from the sealing washer under the stack pipe (15), deflate the unit, remove the stack pipe and renew the washer.

(iv) If leakage of fluid or loss of pressure occurs and cannot be traced to the inflation valve or sealing washer, deflate the strut and then dismantle (see para. 76 (i) to (v)). If fluid is found in the lower sliding member (8), leakage from the sealing washer (28) is indicated. To remedy this, it will probably be necessary to renew the sealing washer. Proceed as in para. 76 (v) to (vii).

(v) If no leakage is apparent from the sealing washer (28) continue dismantling as in para. 76 (vi) to (vii) and (ix). Then tighten the gland nut (17), using spanner S.T. 699 (Stores Ref. No. T27Q/6233), and if this is ineffective, renew the gland.

ADJUSTMENT OF MAIN WHEEL UNITS

UP and DOWN Latches

80. The arrangement of these latches is shown in Fig. 28. They are set correctly before leaving the manufacturers and should need no adjustment. If, however, the unit is damaged or new retracting struts are fitted, the latches may be re-set by means of the adjustable side stays (1). These should be so adjusted that the lever (15) will contact the face of the inner hinge fitting, below lugs (7) when the upper and lower portions of the strut are truly in line. It is important that when the unit is locked in the "up" position, the "up" latch (5) is forced back 1/32 in. to ensure a positive bearing on the "up" catch tube. This condition can be obtained by means of the two turnbuckles at each end of the catch tube. Also it is important that a clearance of $\frac{1}{8}$ in. be maintained between the top of the catch tube and the latch (5).

Hydraulic Jacks

81. If adjustment is required, refer to Fig. 28, and:—

(i) Remove the attachment pin (8).

(ii) With fluid pressure applied to the jack at the cutting-out pressure of the system, adjust the jack piston rod fork-end until the pin (8) can just be refitted without straining the retracting strut.

(iii) Unscrew the fork-end an additional half-turn and re-fit and lock the attachment pin (8) (the additional half-turn is to ensure that the jack piston will not bottom before the latches (3) are fully engaged).

Method of Setting Main Wheel Unit Doors

82. (i) Jack the aircraft and chock the tail wheel (see Fig. 1).

(ii) Remove both the pins securing the adjustable ends of the arms to the rotating pins on the doors.

(iii) Retract the main wheels.

(iv) Push one of the doors into the closed position and adjust the adjustable end of the arm until the door is held in the closed position by the arm when the pin is fitted.

(v) Repeat this procedure with the opposite door.

(vi) Lower the wheels and fit the pins to the rotating pins on both doors.

(vii) Raise the wheels and check that the doors close correctly.

TAIL WHEEL UNIT

General

83. The tail wheel is illustrated in fig. 30. For the method of topping up and inflating the strut, see para. 86, 87 and 88. The fluid to be used is D.T.D. 585 (Stores Ref. K2/138). Special tools for servicing shock-absorber strut, see Figs. 32 to 41. For information on Shimmy Eliminator, see Sect. 7, Chap. 5, Fig. 2.

Removing Tail Wheel

84. To remove the tail wheel, refer to Fig. 30 and:—

(i) Jack the aircraft (see Fig. 3).

(ii) Remove the two bolts (31) to free the axle (32).

Removing and Refitting Tyre

85. The procedure is described in A.P. 2337, Vol. I.

TAIL WHEEL SHOCK-ABSORBER STRUT

Fluid Level Check

86. The level should not be checked immediately after landing or taxying. To check the level:—

(i) With the aircraft standing on its wheels remove the inflation valve dust cap and fit a standard inflation adaptor.

(ii) Allow air to escape gradually until the unit is fully compressed.

(iii) If at the final stage of compression a spray of fluid and air is blown off, the fluid level is correct and the tail may then be jacked and the strut reinflated (see para. 88) to the correct pressure at full free extension (see Leading Particulars).

(iv) If air only is blown off, the fluid level requires topping up (see para. 87).

Topping Up with Fluid

87. (i) With the shock-absorber fully compressed and having removed the dust cap from the inflation valve, connect, through a standard adaptor, a component test rig.

(ii) Pump fluid into the shock absorber until the pressure begins to rise rapidly. Do not allow the pressure to exceed 1,200 lb. per sq. in.

(iii) Slowly release the pressure by screwing up the adaptor gauge head and unscrewing the release screw, and allow the shock absorber to compress fully.

(iv) Disconnect the rig from the inflation adaptor and connect an air supply.

(v) Jack the tail and inflate to the correct pressure at full extension (see Leading Particulars).

(vi) Disconnect the air supply, remove the inflation adaptor, and replace the inflation valve dust cap.

Inflation Pressure Check

88. The strut inflation pressure should be checked with the aircraft standing on the ground:—

(i) Remove the dust cap from the inflation valve, connect a standard inflation adaptor, and check the air pressure in the strut.

(ii) Measure the extension of the strut and check it against the dimension given in the table (see Fig. 26). If the pressure is within the limits given, the strut is serviceable.

(iii) If the pressure is below the minimum for the dimension concerned:—

(a) Close the inflation valve, remove the dust cap from the end of the adaptor and connect an air supply. Re-open the inflation valve and inflate the strut until the pressure and extension are within the limits given in the table.

(b) Jack the aircraft until the strut is fully extended. The pressure in the strut in this condition must be that given in the Leading Particulars. If it is not, the fluid content is insufficient and the unit must be partly dismantled and refilled with fluid (see para. 93).

Deflating

89. To deflate the strut, fit a standard adaptor to the inflation valve and release the pressure by screwing up the gauge head and unscrewing the air release screw.

Dismantling

90. *WARNING.—On no account should any bolts, connections, etc., be removed before the strut is deflated. Failure to observe this precaution may result in a serious accident.* To dismantle the tail wheel strut refer to Fig. 30 and proceed as follows:—

(i) Remove the complete unit (see Sect. 5).

(ii) Deflate the strut (see para. 89).

(iii) Remove the wheel and axle (see para. 84, sub-para. (ii)).

(iv) Remove the set-screws (18) and the inflation valve (1). This will release the main outer tube (23) which must then be drawn down from the top of the strut to expose the dowels (20).

(v) Extract the dowels (20). remove the end fitting (17) and then slide the main outer tube (23) from the top of the strut.

(vi) Using tool S.T. 721 (Stores Ref. No. T27Q/6238), unscrew the ferrules (15) from the screwed rods securing fork (30) into the bottom of the lower sliding tube (29). Extract the rods.

(vii) Extract the wheel fork assembly from the tube (29). The air cylinder (22), together with the diaphragm (27) and cam (25) assembly, can then be pushed down through the lower sliding member and extracted from the bottom.

(viii) Remove the locking grub screw (21), and, using spanner S.T. 781 (Stores Ref. No. T27Q/6662), unscrew the gland nut (3); remove the distance piece (4), sealing gland ring (5), and spacer ring (6).

(ix) Using spanner S.T. 719 (Stores Ref. No. T27Q/6236), unscrew the retaining nut (7) to free the upper self-centreing cam (24).

(x) Remove the four set-screws (26) to free the cam (25) and the damping valve assembly from the end of the air cylinder (22).

(xi) Remove the nut from the bolt (9) to free the cover plate, diaphragm gland ring and damping valve (10).

(xii) Remove the locking circlip and unscrew gland nut (11) with spanner S.T. 252 (Stores Ref. No. T27Q/6062), if it is required to renew sealing gland ring (12).

(xiii) Remove the 10 set-screws (13) to release the end ring (14) from the attachment bracket sleeve (28).

Note.—The attachment bracket sleeve (28) must not be removed from the bottom of the main outer tube.

Re-assembling

91. In general, re-assembly is a reversal of the dismantling procedure, but as the unit must be filled with fluid during assembly, the following instructions should be observed:—

(i) Rebuild the air cylinder (22) with diaphragm assembly (27) and cam (25).

(ii) Fit the upper self-centreing cam (24) into the lower sliding member (29), taking care to position the the key (8) correctly and securing the cam in position with the retaining nut (7).

(iii) Using the sleeve S.T. 857 (Stores Ref. No. T27Q/7409), insert the air cylinder assembly into the lower sliding tube from the bottom.

(iv) Build up the wheel fork assembly complete with sealing gland (12) and gland nut (11), insert into the bottom of the lower sliding tube and refit the screwed rods and ferrules (15).

(v) Fit the spacer (6), gland (5), distance piece (4) and gland nut (3) over the air cylinder (22) (using sleeve S.T. 528 (Stores Ref. No. T27Q/6190) when fitting the gland ring), but do not, at this stage insert these members into the lower sliding tube.

(vi) Fit the inflation valve (1) into the air cylinder and carry out the filling instructions contained in para. 92, sub-para. (i) to (v).

(vii) Enter the lower sliding member assembly into the bottom of the main outer tube (23).

(viii) Replace the end fitting (17) over the top of cylinder (22), the main outer tube being drawn down sufficiently to enable the dowels (20) to be replaced. Then slide the tube (23) up over the end fitting (17) until the set screws (18) can be replaced.

(ix) Carry out the instructions contained in para. 92, sub-paras. (vi) to (viii), to complete the filling and inflating procedure. Refit the wheel and axle into the fork.

Filling and Inflating

92. (i) With the strut assembled as instructed in para. 91, sub-paras. (i) to (vi), and the unit upright and fully extended, connect a standard inflation adaptor to the inflation valve (1) and pump in fluid until

it completely fills the lower sliding member and overflows from the top edge.

(ii) Unscrew the inflation valve and fit sealing plug S.T. 784 (Stores Ref. No. T27Q/6934) in its place.

(iii) With the gland housing still full of fluid and the unit fully extended, insert the spacer (6) and sealing gland ring (5), using sleeve S.T. 720 (Stores Ref. No. T27Q/6237) to facilitate fitting of the gland ring.

Note.—While pressing the gland ring down into position, fluid must be released past the gland ring by the careful use of a smooth wooden or metal spoon.

(iv) Refit the distance ring (4) and the gland nut (3), using spanner S.T. 781 (Stores Ref. No. T27Q/6662) to tighten the gland nut. Replace the gland nut locking grub screw (21).

(v) Complete the re-assembly of the strut as described in para. 91, sub-paras. (vii) and (viii).

(vi) Remove the sealing plug S.T. 784 (Stores Ref. No. T27Q/6934) and fully compress the strut. Refit the inflation valve, attach the adaptor and pump in fluid to extend the strut.

(vii) Extend and compress the strut by alternately pumping in fluid and operating the inflation valve until bubble-free fluid is expelled from the inflation valve during compression. Then disconnect the fluid pump and connect an air line to the inflation adaptor.

(viii) Inflate to the correct pressure at full free extension (see Leading Particulars). Close the inflation valve and remove the air line and inflation adaptor. Replace the inflation valve dust cap.

Testing

93. With the unit deflated, connect component test rig through a standard inflation adaptor, and pump in fluid to a pressure of 1,200 lb. per sq. in. This pressure should be maintained.

Leakage of Fluid or Loss of Pressure

94. (i) Leakage of fluid may occur at the following points (see Fig. 30):—

(a) At the sealing gland ring (12). Leakage at this point will eventually cause fluid to appear at the junction of the lower sliding member (29) and the wheel fork (30).

(b) At the sealing gland ring (5). Fluid will eventually appear at either the top or bottom ends of the main outer tube (23).

In both cases the unit must be dismantled and the affected ring renewed. At the same time any metal parts in sliding contact should be examined for scoring or other damage.

(ii) Loss of air pressure may occur with or without external indication.

(a) Loss of pressure can occur through failure of the inflation valve (1) or the sealing washer under the valve, both of which can be tested externally. Renewal of the core of the inflation valve or renewal of the sealing washer will be necessary.

Note.—When fitting a new inflation valve core, care must be taken that the correct type of core, i.e., the one bearing a star on the end of the valve pin, is used.

(b) Loss of pressure can also occur past the head of the stack pipe (19), which will not be apparent externally, but will be visible in the counter bore at the head of cylinder (22) when end fitting (17) has been removed. This can only be removed immediately if the stack pipe is of the hexagon-headed

screwed-in type, when the sealing washer under the head can be renewed. If leakage is experienced past the head of the soldered-in type of stack pipe (see alternative stack pipe—fig. 30) the complete air cylinder (22) must be renewed.

MISCELLANEOUS

Propeller Feathering Tests

95. When propeller feathering tests are to be made on the ground, an external battery must be used. It is essential that this be fully charged, to avoid damage to the switch solenoids.

Vacuum System Test Cock

96. A test cock is fitted in the vacuum pipe extending aft on the starboard side of the fuselage (see Sect. 4, Chap. 2, Fig. 4, and Sect. 11). This cock enables an external suction pump to be connected when it is required to test the rear section of the vacuum system. The external access door to the cock is located on the starboard side just aft of the bomb compartment.

Draining A.S.I. System

97. The drains in the A.S.I. system consist of short vertical lengths of pipe, sealed at the lower end. To drain the system these drain pipes are disconnected and removed and any water shaken out. For the location of the drains, see the relevant illustration in Sect. 11.

Landing Lamp Adjustment

98. For instructions on making adjustments, and for other servicing notes, refer to A.P. 1095A, Vol. I.

Method of Adjusting the Bomb Doors

99. (i) Drain the bomb door circuit.

(ii) Disconnect the four jacks at their lower pins.

(iii) Fully close jack by hand.

(iv) Close each door in turn and hold it flush with the fuselage to ascertain the adjustment required for each jack.

(v) Slacken the locknut, screw the eyebolt in or out, to shorten or lengthen the jack, as required, and tighten the locknut.

(vi) Lower the doors, then extend the jacks and connect to the doors.

(vii) To check the adjustment, close each door in turn, then close both together. They should meet evenly along the whole length of the joint. Any sag should not exceed $\frac{3}{8}$ in.

(viii) Sagging in excess of $\frac{3}{8}$ in. may be remedied by closing the door which sags slightly inside the skin line and closing the other door slightly outside the skin line.

Hand De-icing Pump

100. The hand pumps for windscreen and air bomber's window de-icing require to be primed if they have been drained in the course of servicing or from any other cause.

Fixed Aerial

101. It is important, when replacing or repairing the main fixed aerials, that the insulator immediately forward of the fin is fitted with a $^{3}/_{32}$ in. dia. aluminium rivet instead of the standard split pin. This is to provide a weak link in the aerial and so prevent damage by over-tensioning.

Swinging D.R. Compass

102. When swinging the D.R. compass the entrance door must be closed.

Sanitary Closet

103. It is important that the sewage should always be covered with liquid; if necessary, add water occasionally. When cleaning the closet the sewage container can be removed by means of a wire handle attached to it. It should then be emptied and swilled out. Before re-charging the closet the "Elsanol" chemical should then be added to $\frac{1}{2}$-$\frac{3}{4}$ gall. of water and well mixed. Care should be taken to see that the chemical is not exposed to naked light.

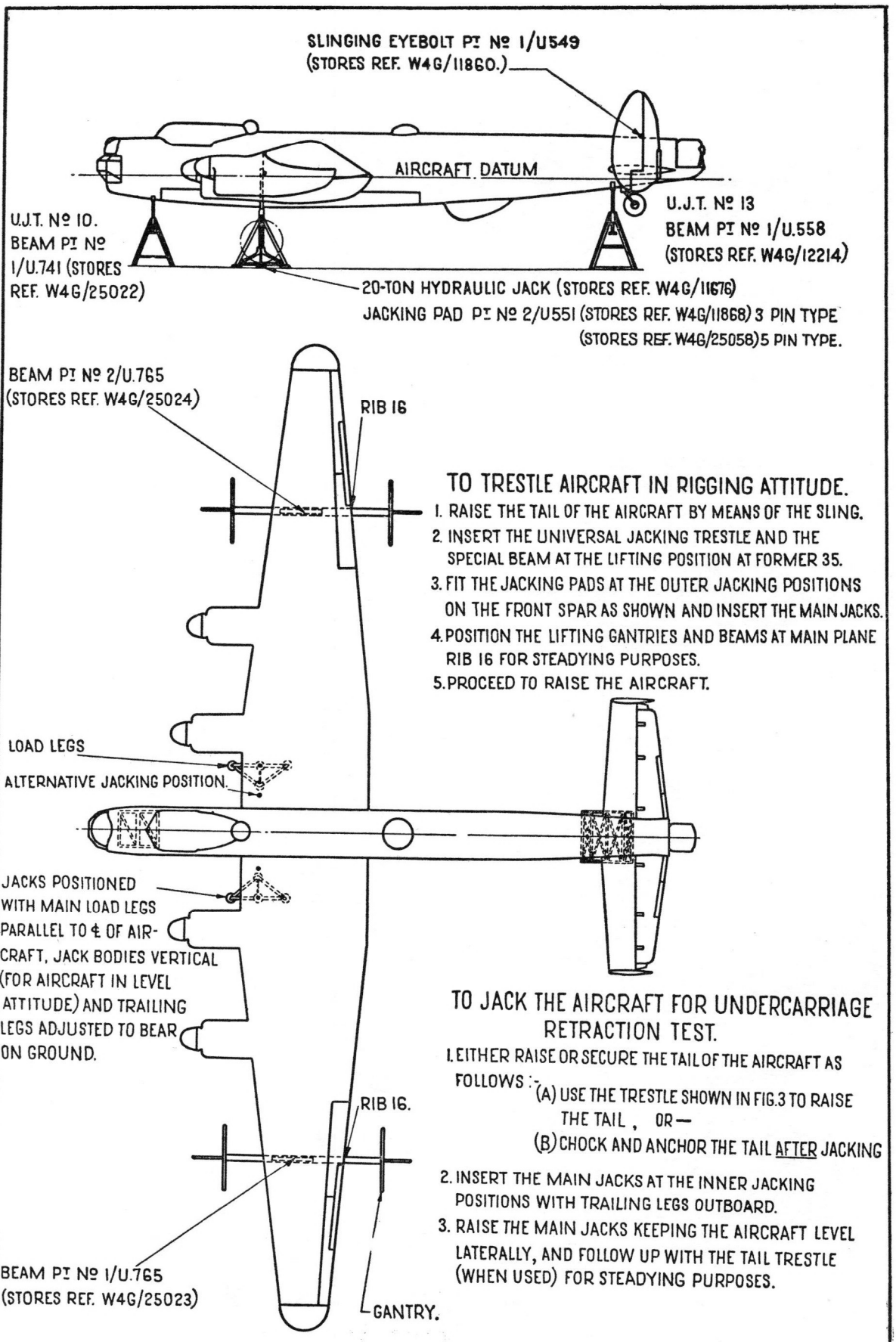
SLINGING EYEBOLT PT Nº 1/U549
(STORES REF. W4G/11860.)
AIRCRAFT DATUM
U.J.T. Nº 10.
BEAM PT Nº
1/U.741 (STORES
REF. W4G/25022)
U.J.T. Nº 13
BEAM PT Nº 1/U.558
(STORES REF. W4G/12214)
20-TON HYDRAULIC JACK (STORES REF. W4G/11676)
JACKING PAD PT Nº 2/U551 (STORES REF. W4G/11868) 3 PIN TYPE
(STORES REF. W4G/25058) 5 PIN TYPE.
BEAM PT Nº 2/U.765
(STORES REF. W4G/25024)
RIB 16
TO TRESTLE AIRCRAFT IN RIGGING ATTITUDE.
1. RAISE THE TAIL OF THE AIRCRAFT BY MEANS OF THE SLING.
2. INSERT THE UNIVERSAL JACKING TRESTLE AND THE SPECIAL BEAM AT THE LIFTING POSITION AT FORMER 35.
3. FIT THE JACKING PADS AT THE OUTER JACKING POSITIONS ON THE FRONT SPAR AS SHOWN AND INSERT THE MAIN JACKS.
4. POSITION THE LIFTING GANTRIES AND BEAMS AT MAIN PLANE RIB 16 FOR STEADYING PURPOSES.
5. PROCEED TO RAISE THE AIRCRAFT.
LOAD LEGS
ALTERNATIVE JACKING POSITION.
JACKS POSITIONED WITH MAIN LOAD LEGS PARALLEL TO ℄ OF AIR-CRAFT, JACK BODIES VERTICAL (FOR AIRCRAFT IN LEVEL ATTITUDE) AND TRAILING LEGS ADJUSTED TO BEAR ON GROUND.
TO JACK THE AIRCRAFT FOR UNDERCARRIAGE RETRACTION TEST.
1. EITHER RAISE OR SECURE THE TAIL OF THE AIRCRAFT AS FOLLOWS :-
(A) USE THE TRESTLE SHOWN IN FIG.3 TO RAISE THE TAIL , OR—
(B) CHOCK AND ANCHOR THE TAIL AFTER JACKING
2. INSERT THE MAIN JACKS AT THE INNER JACKING POSITIONS WITH TRAILING LEGS OUTBOARD.
3. RAISE THE MAIN JACKS KEEPING THE AIRCRAFT LEVEL LATERALLY, AND FOLLOW UP WITH THE TAIL TRESTLE (WHEN USED) FOR STEADYING PURPOSES.
RIB 16.
BEAM PT Nº 1/U.765
(STORES REF. W4G/25023)
GANTRY.
1
JACKING COMPLETE AIRCRAFT
1

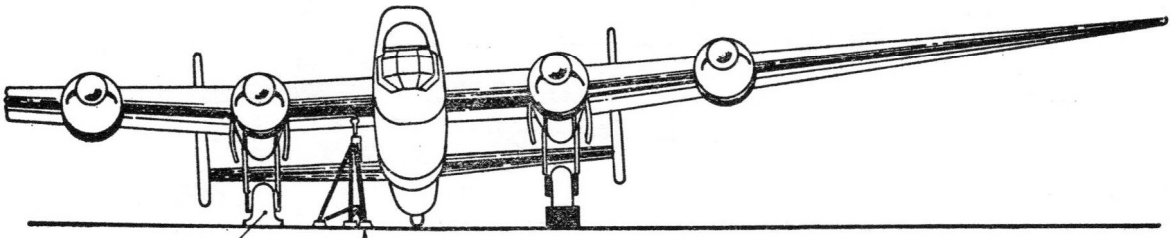

DEFLATED TYRE

20-TON HYDRAULIC JACK (STORES REF. W4G/11676)
JACKING PAD PT Nº 2/U551 (STORES REF. W4G/11868 OR W4G/25058)

TO JACK THE AIRCRAFT WHEN ONE MAIN WHEEL TYRE IS DEFLATED.

1. CHOCK OR ANCHOR THE TAIL WHEEL AND CHOCK THE MAIN WHEEL ON THE SIDE OPPOSITE THE DEFLATED TYRE.
2. RAISE THE HINGED LEADING EDGE AND FIT A JACKING PAD AT THE INNER JACKING POSITION.
3. PLACE A JACK IN A FULLY TILTED ATTITUDE BELOW THE JACKING PAD WITH THE LOAD LEGS PARALLEL TO A LINE JOINING THE CENTRES OF THE TAIL WHEEL AND THE MAIN WHEEL ON THE OPPOSITE SIDE TO THE JACK (15° APPROX. TO THE ℄ OF THE AIRCRAFT.)
4. RAISE THE JACK UNTIL THE WHEEL IS CLEAR OF THE GROUND KEEPING THE TRAILING LEG ADJUSTED TO SUPPORT THE JACK THROUGHOUT THE OPERATION.

IMPORTANT

THESE INSTRUCTIONS SHOULD BE FOLLOWED CAREFULLY OR DAMAGE TO JACK MAY RESULT.

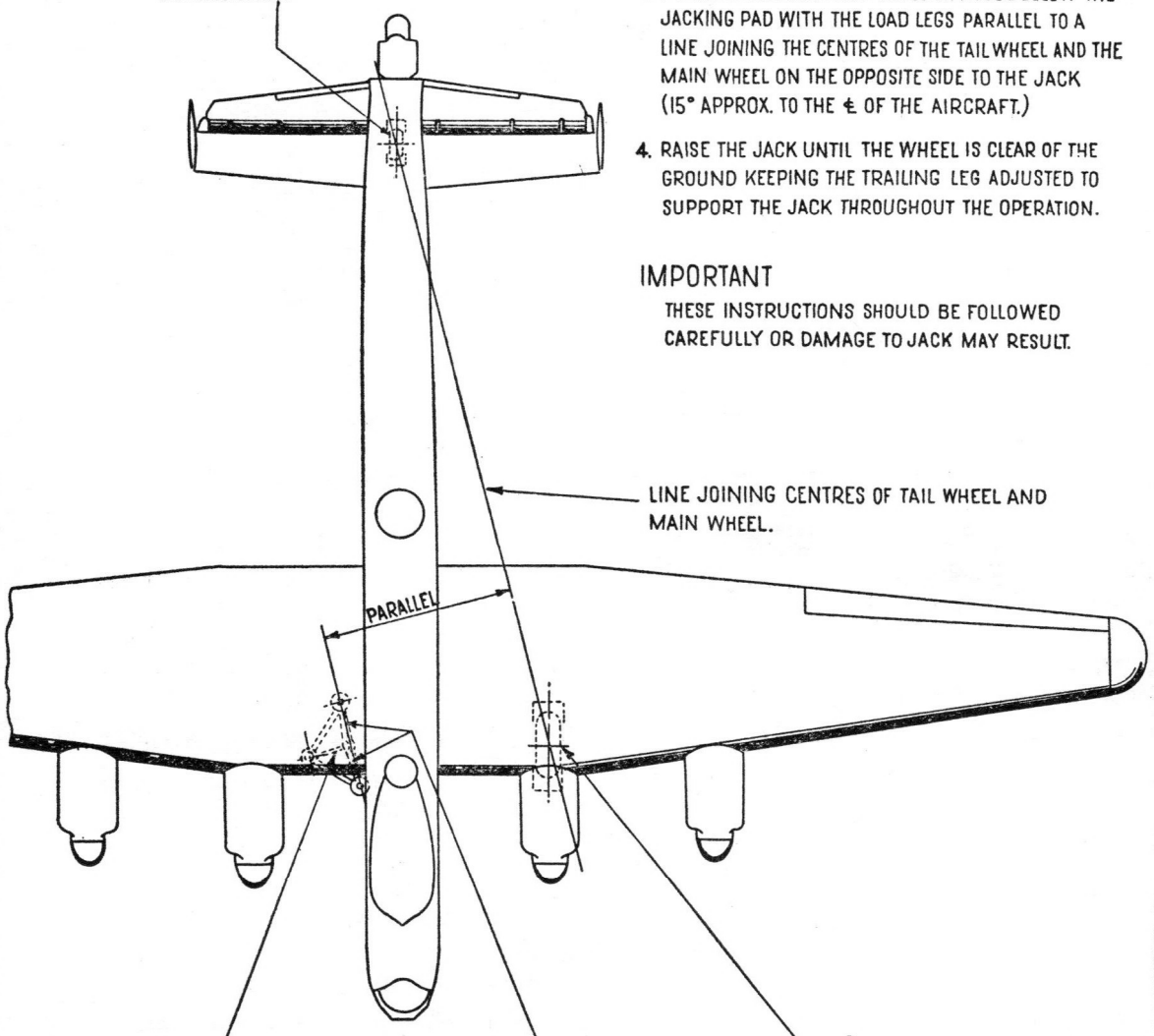

2	JACKING ONE MAIN WHEEL	2

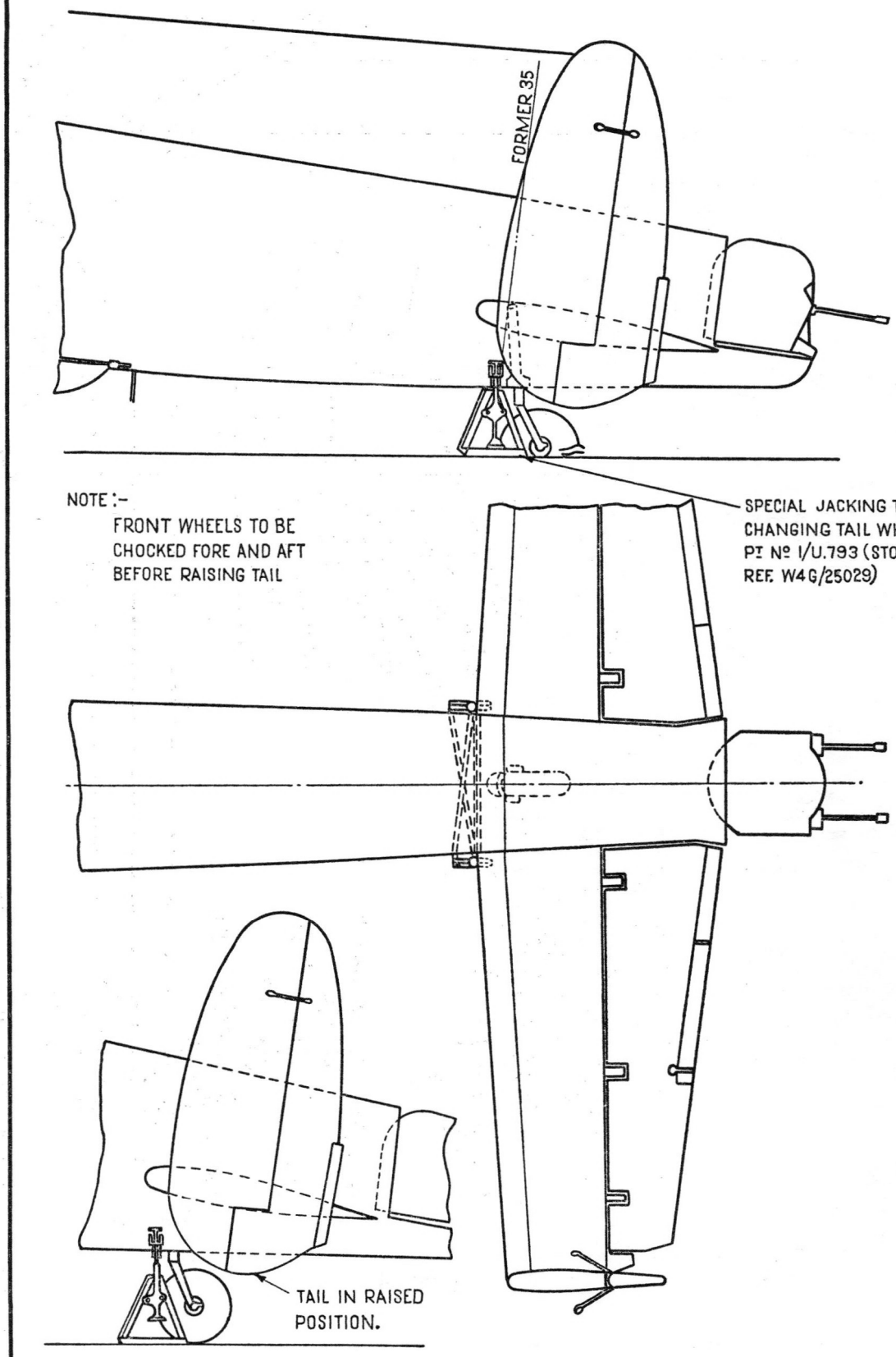

3	JACKING FOR REMOVAL OF TAIL WHEEL	3

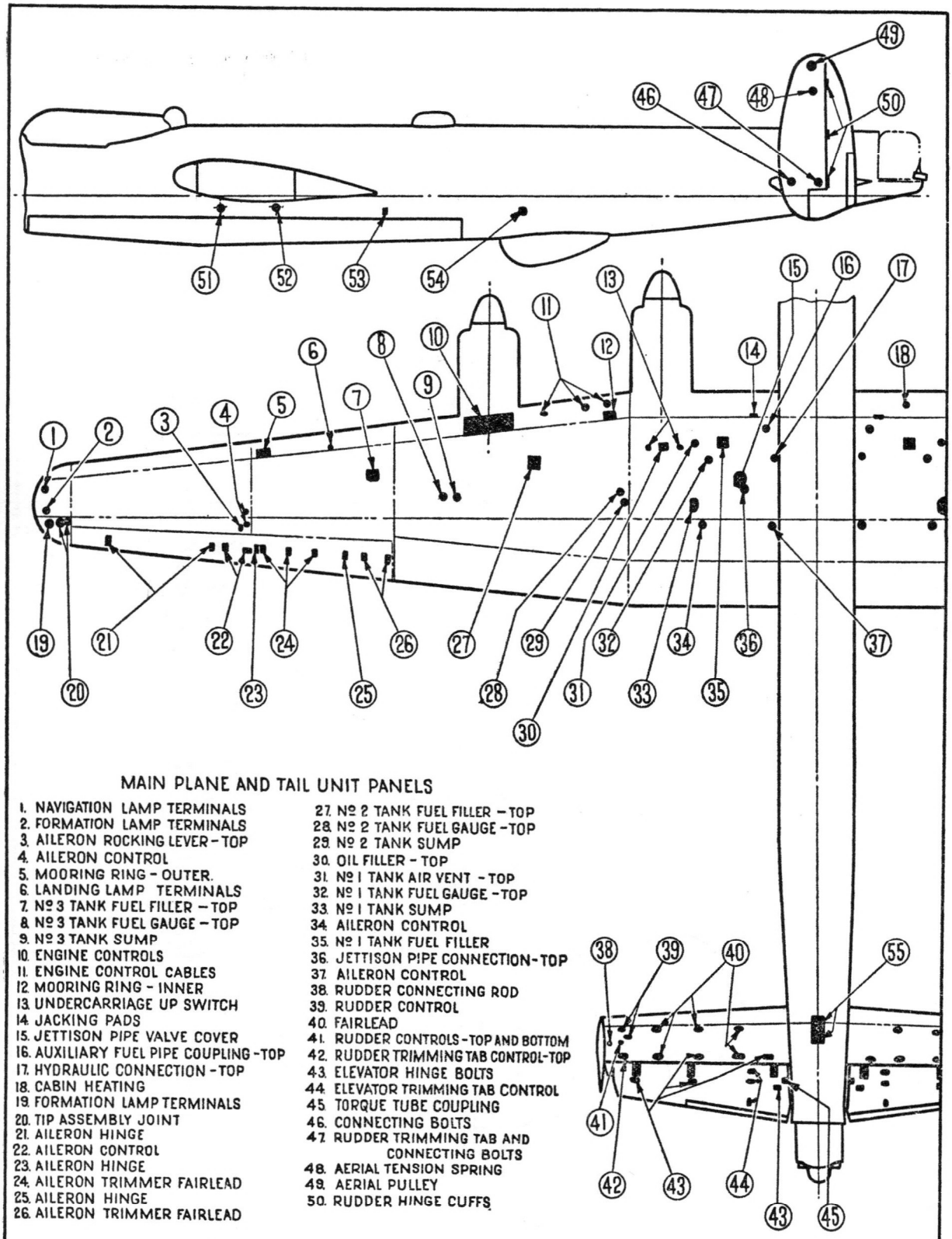

MAIN PLANE AND TAIL UNIT PANELS

1. NAVIGATION LAMP TERMINALS
2. FORMATION LAMP TERMINALS
3. AILERON ROCKING LEVER - TOP
4. AILERON CONTROL
5. MOORING RING - OUTER.
6. LANDING LAMP TERMINALS
7. Nº 3 TANK FUEL FILLER - TOP
8. Nº 3 TANK FUEL GAUGE - TOP
9. Nº 3 TANK SUMP
10. ENGINE CONTROLS
11. ENGINE CONTROL CABLES
12. MOORING RING - INNER
13. UNDERCARRIAGE UP SWITCH
14. JACKING PADS
15. JETTISON PIPE VALVE COVER
16. AUXILIARY FUEL PIPE COUPLING - TOP
17. HYDRAULIC CONNECTION - TOP
18. CABIN HEATING
19. FORMATION LAMP TERMINALS
20. TIP ASSEMBLY JOINT
21. AILERON HINGE
22. AILERON CONTROL
23. AILERON HINGE
24. AILERON TRIMMER FAIRLEAD
25. AILERON HINGE
26. AILERON TRIMMER FAIRLEAD
27. Nº 2 TANK FUEL FILLER - TOP
28. Nº 2 TANK FUEL GAUGE - TOP
29. Nº 2 TANK SUMP
30. OIL FILLER - TOP
31. Nº 1 TANK AIR VENT - TOP
32. Nº 1 TANK FUEL GAUGE - TOP
33. Nº 1 TANK SUMP
34. AILERON CONTROL
35. Nº 1 TANK FUEL FILLER
36. JETTISON PIPE CONNECTION - TOP
37. AILERON CONTROL
38. RUDDER CONNECTING ROD
39. RUDDER CONTROL
40. FAIRLEAD
41. RUDDER CONTROLS - TOP AND BOTTOM
42. RUDDER TRIMMING TAB CONTROL - TOP
43. ELEVATOR HINGE BOLTS
44. ELEVATOR TRIMMING TAB CONTROL
45. TORQUE TUBE COUPLING
46. CONNECTING BOLTS
47. RUDDER TRIMMING TAB AND CONNECTING BOLTS
48. AERIAL TENSION SPRING
49. AERIAL PULLEY
50. RUDDER HINGE CUFFS

FUSELAGE PANELS

51. EMERGENCY AIR AND OXYGEN CHARGING VALVES - PORT SIDE
52. HYDRAULIC RESERVOIR FILLER CAP — STARBOARD SIDE
53. ELECTRICAL GROUND SUPPLY SOCKET — STARBOARD SIDE
54. VACUUM TEST COCK — STARBOARD SIDE
55. TAILWHEEL STRUT — BOTTOM.

NOTE :- ALL PANELS ARE SITUATED ON UNDERSIDE UNLESS OTHERWISE STATED

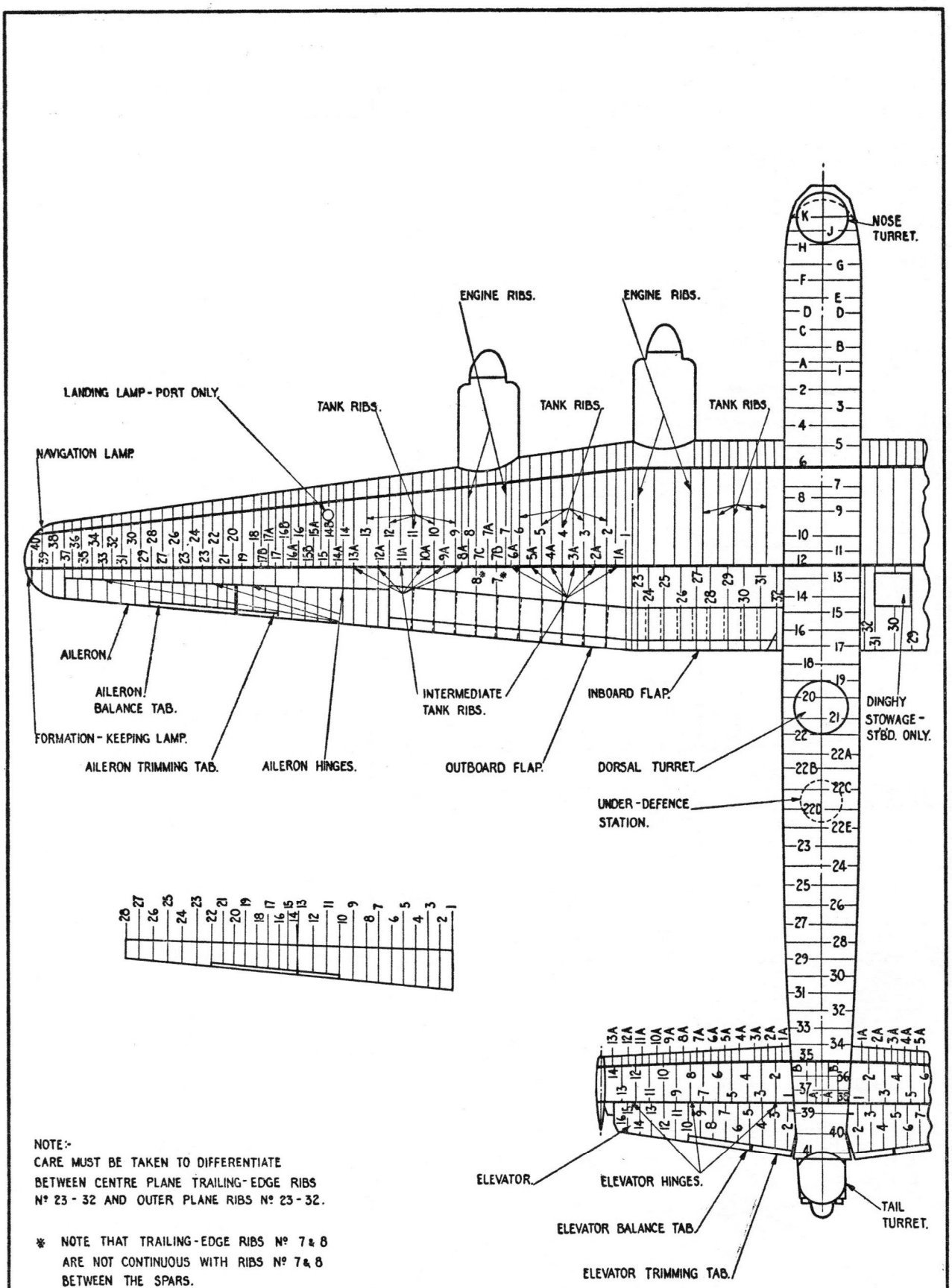

NOTE:-
CARE MUST BE TAKEN TO DIFFERENTIATE BETWEEN CENTRE PLANE TRAILING-EDGE RIBS Nº 23 - 32 AND OUTER PLANE RIBS Nº 23 - 32.

* NOTE THAT TRAILING-EDGE RIBS Nº 7 & 8 ARE NOT CONTINUOUS WITH RIBS Nº 7 & 8 BETWEEN THE SPARS.

5	FORMER AND RIB POSITIONS	5

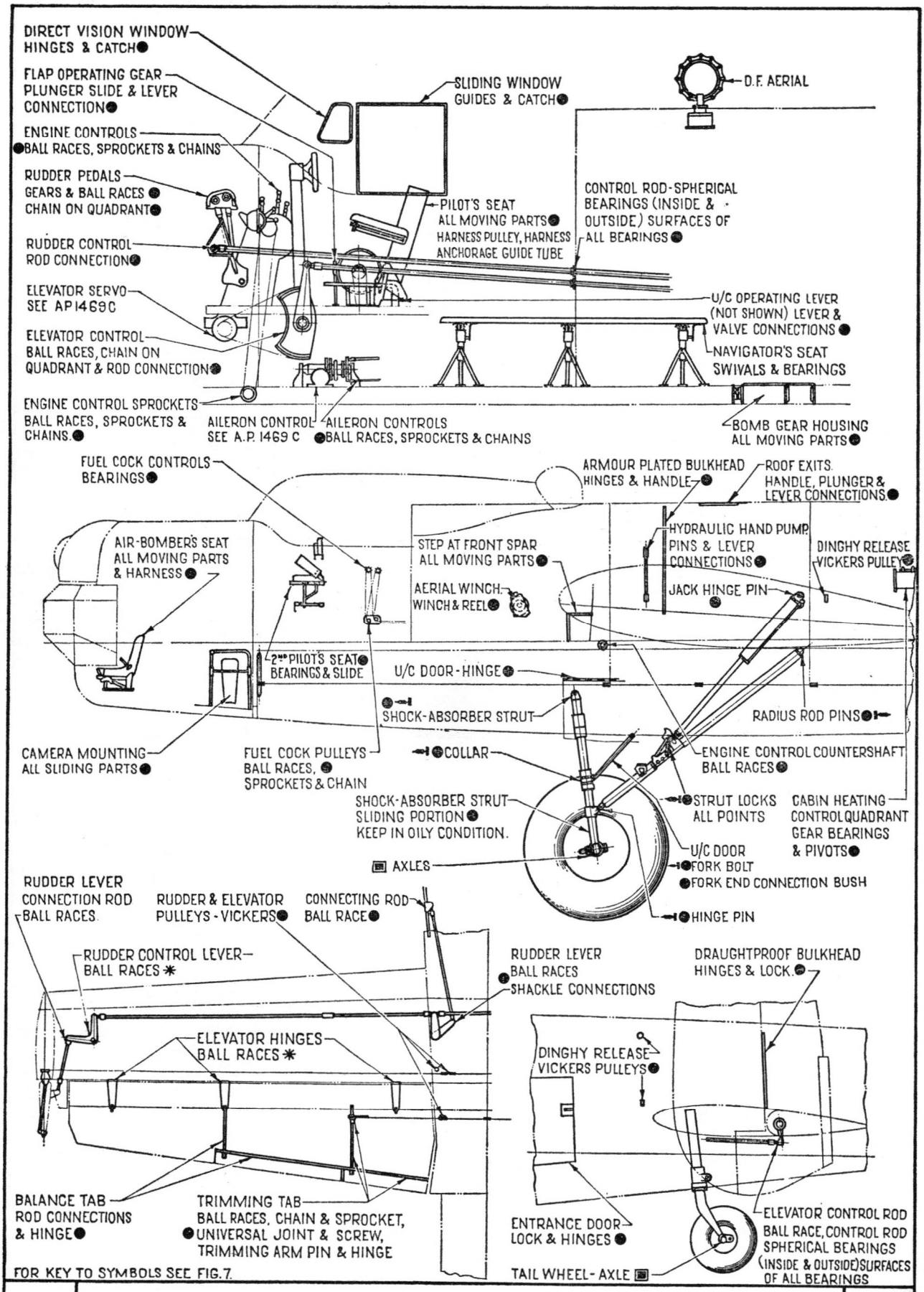

FOR KEY TO SYMBOLS SEE FIG.7.

6 LUBRICATION DIAGRAM - FUSELAGE TAIL UNIT 6

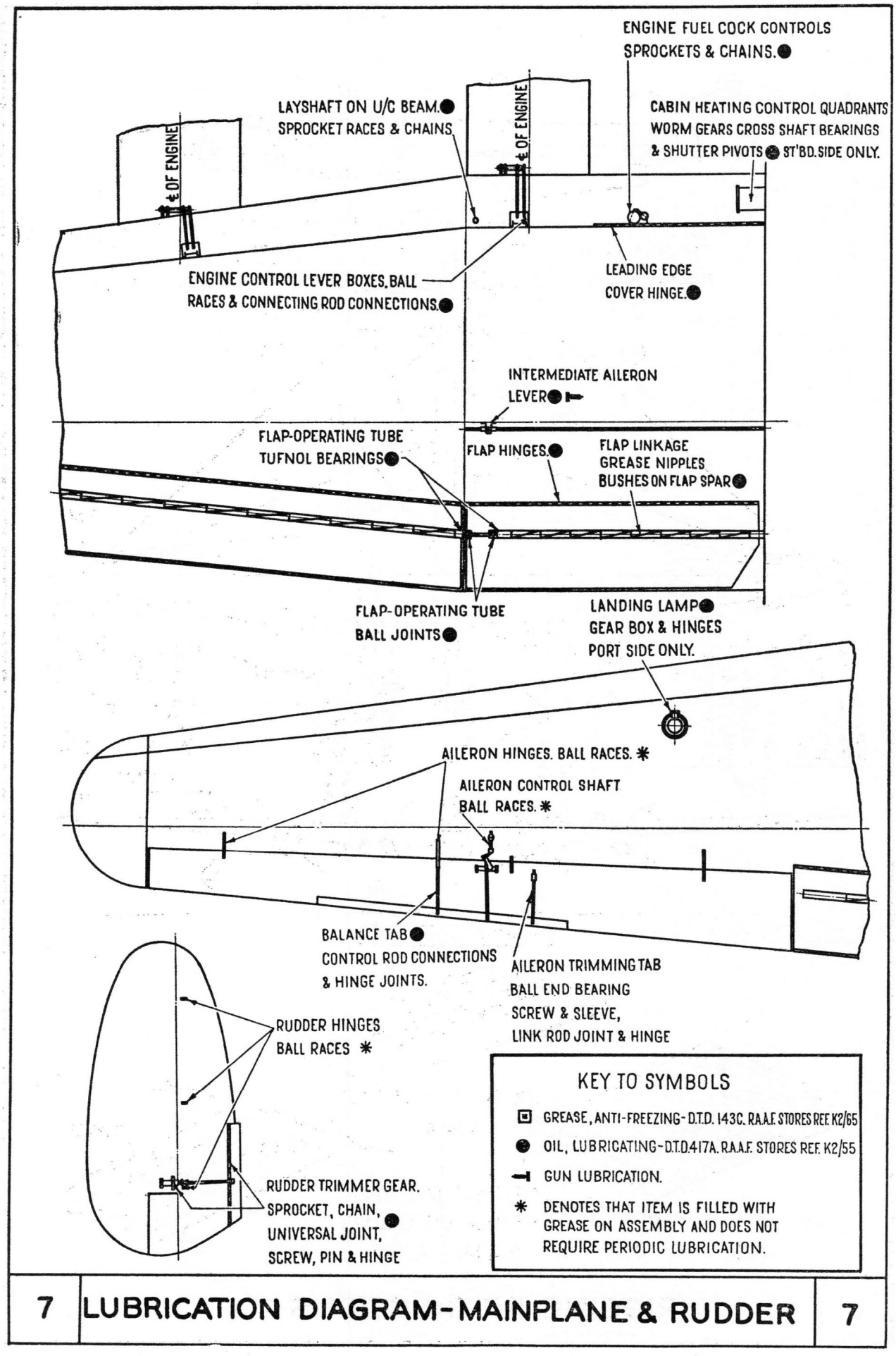

7	LUBRICATION DIAGRAM - MAINPLANE & RUDDER	7

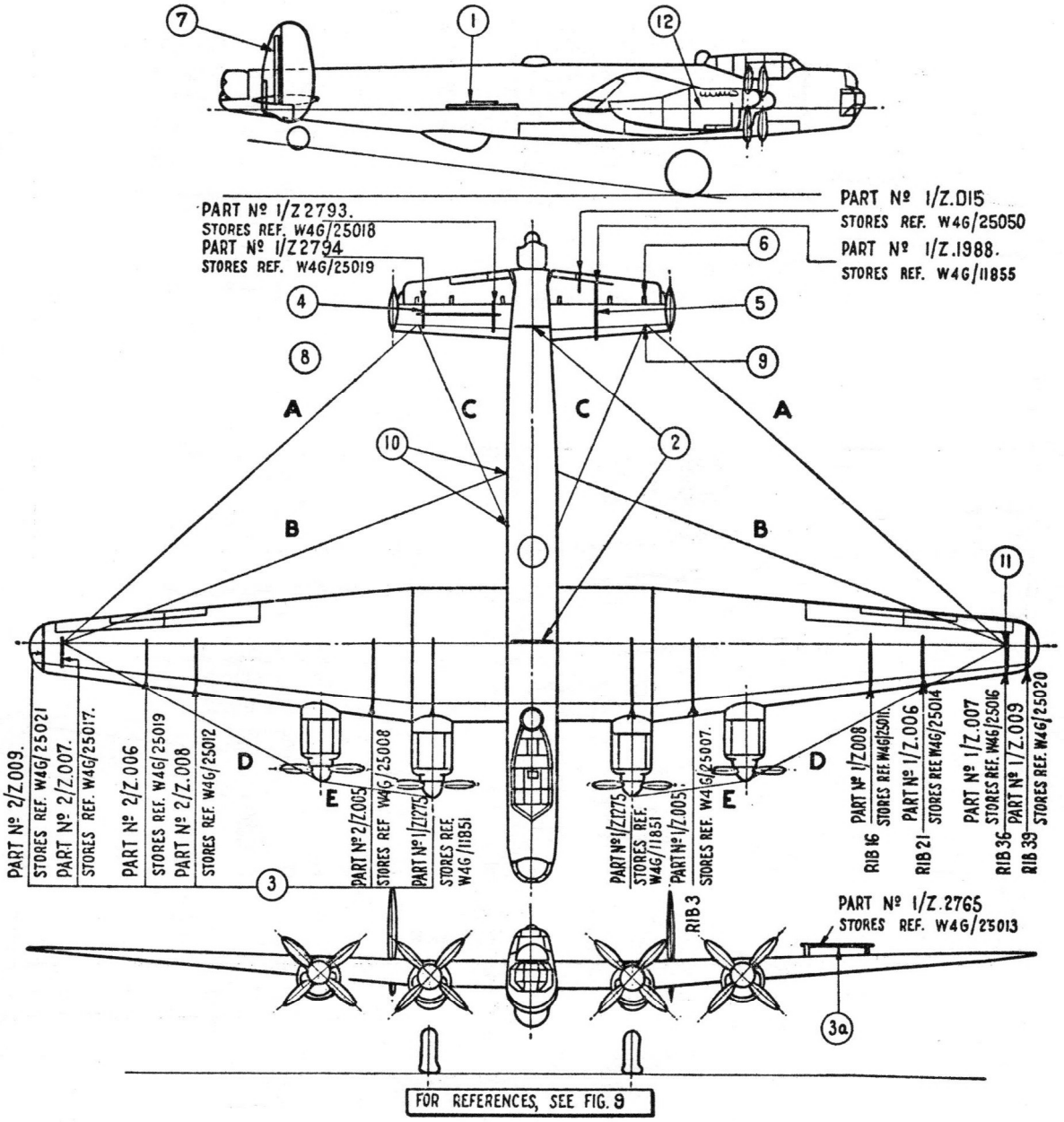

FOR REFERENCES, SEE FIG. 9

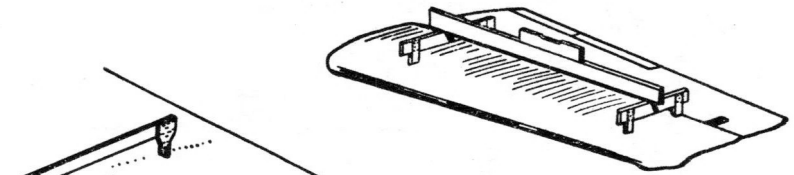

TAIL PLANE INCIDENCE CHECK.

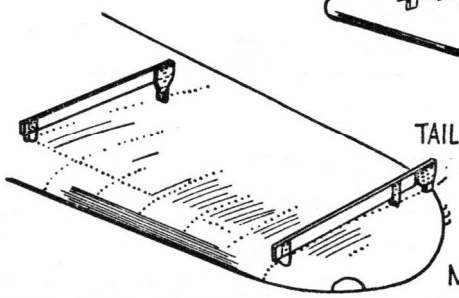

MAIN PLANE INCIDENCE CHECK.

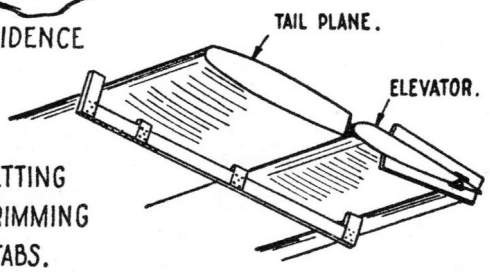

METHOD OF SETTING ELEVATOR AND TRIMMING AND BALANCE TABS.

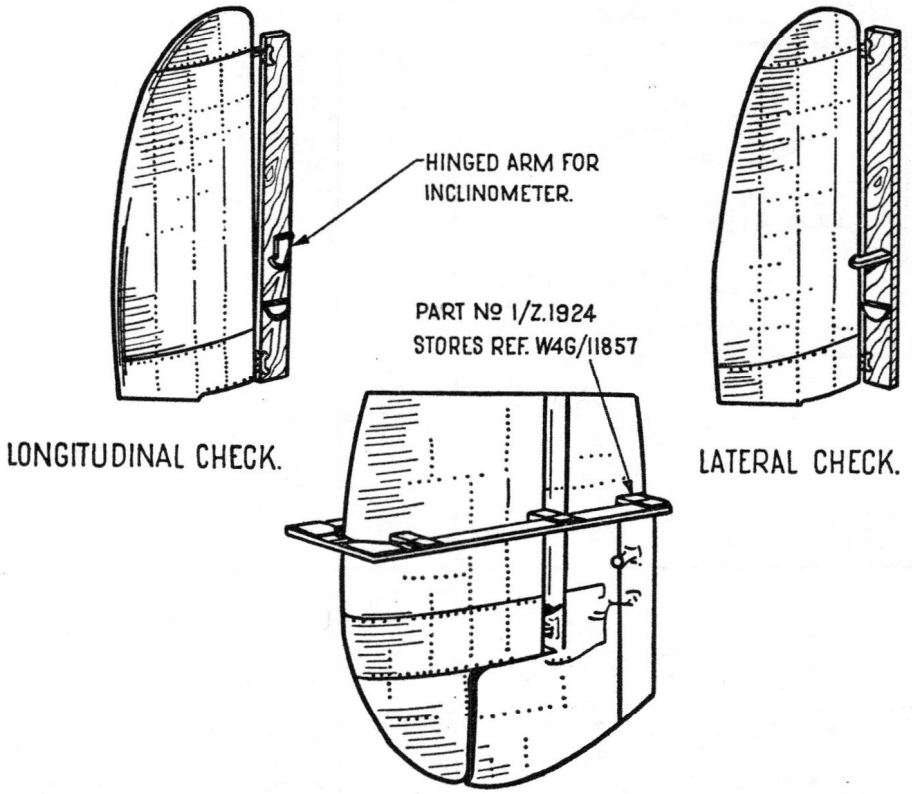

METHOD OF SETTING RUDDER IN CONTINUITY WITH FIN.

1. TO LEVEL THE AIRCRAFT LONGITUDINALLY, FIT PEGS, PART Nº 1/Z.1353, STORES REF. A73/4316, INTO THE TWO REAR JACKING POINTS. PLACE STRAIGHT EDGE, PART Nº 1/Z.1427, STORES REF. W4G/12225 ACROSS THE PEGS AND CHECK WITH INCLINOMETER.

2. TO LEVEL THE AIRCRAFT TRANSVERSELY, PLACE STRAIGHT EDGES, PART Nº 1/Z.1422 AND 1/Z.1421, STORES REF. W4G/12223 AND W4G/12224 ACROSS THE DATUM BLOCKS ATTACHED TO EACH SIDE OF FORMERS 12 & 35 RESPECTIVELY INSIDE THE FUSELAGE AND CHECK WITH INCLINOMETER.

3. CHECK MAINPLANE INCIDENCE BY MEANS OF INCIDENCE JIGS SHOWN ON FIG. 8 AT RIBS 39, 36, 21, 16 AND 3 AND AT ℄ OF INBOARD ENGINE.

3a. CHECK MAINPLANE DIHEDRAL BY MEANS OF CHECK BOARD, PART Nº 1/Z.2765, STORES REF. W4G/25013 PLACED ON TOP SURFACE OF REAR SPAR.

4. TO CHECK TAIL PLANE INCIDENCE PLACE INCIDENCE JIGS, PART Nº 1/Z.2794 AND 1/Z.2793, STORES REF. W4G/25019 AND W4G/25018 ON TAIL PLANE RIBS Nº 11 AND 3 RESPECTIVELY. CHECK INCIDENCE AND HORIZONTAL LEVEL BY MEANS OF AN INCLINOMETER.

5. TO SET ELEVATOR, USE THE SETTING BOARD, PART Nº 1/Z.1988, STORES REF. W4G/11855 AT TAIL PLANE RIB Nº 6. TO SET THE ELEVATOR TRIMMER, PLACE THE SETTING BOARDS, PART Nº 1/Z.015, STORES REF. W4G/25050 ON EACH SIDE OF THE ELEVATOR, AND SET THE TRIMMING TAB MIDWAY BETWEEN THE BOARDS.

6. ON THE ASSEMBLY OF THE TAILPLANE TO THE AIRCRAFT, THE ELEVATOR HINGE BRACKETS MUST BE ALIGNED RIGHT THROUGH THE AIRCRAFT. THIS SHOULD BE CARRIED OUT BY MEANS OF A LENGTH OF TWINE THROUGH THE BOLT HOLES. THE HINGE BRACKETS SHOULD BE SHIMMED IF NECESSARY FOR ALIGNMENT.

7. CHECK THE VERTICALITY OF THE FINS BY MEANS OF THE CHECKING BOARD, PART Nº 1/Z.1895, STORES REF. W4G/11850. FIN POST INCLINES FORWARD 1 DEG. 15 MIN. ± 30 MIN. FOR LATERAL CHECK ± 15 MIN., TURN THE BOARD THROUGH 90 DEG. (SEE ABOVE). TO SET THE RUDDER IN CONTINUITY WITH THE FIN, USE SETTING BOARDS, PART Nº 1/Z.1924, STORES REF. W4G/11857.

8. CHECK DIMENSIONS AS FOLLOWS :-
   - DISTANCES 'A' TO BE EQUAL WITHIN 1½ IN.
   - DISTANCES 'B' TO BE EQUAL WITHIN 1 IN.
   - DISTANCES 'C' TO BE EQUAL WITHIN ½ IN.
   - DISTANCES 'D' TO BE EQUAL WITHIN ½ IN.
   - DISTANCES 'E' TO BE EQUAL WITHIN ½ IN.

9. RIGGING DATUM ON FRONT SPAR AT TAILPLANE RIB Nº 12.

10. TWO REAR JACKING POINTS IN FUSELAGE LONGERON.

11. RIGGING DATUM, CENTRE OF REAR SLINGING SOCKET, MAINPLANE RIB Nº 36.

12. C.G. ORIGIN, CENTRE OF HOLE, REAR JACKING POINT IN FUSELAGE FRONT CENTRE SECTION.

● THE NOTES ON THIS DIAGRAM RELATE ALSO TO FIG. Nº 8, STORES REFERENCES WHERE QUOTED ARE R.A.A.F. STORES REFERENCE NUMBERS.

9	RIGGING INSTRUCTIONS (2)	9

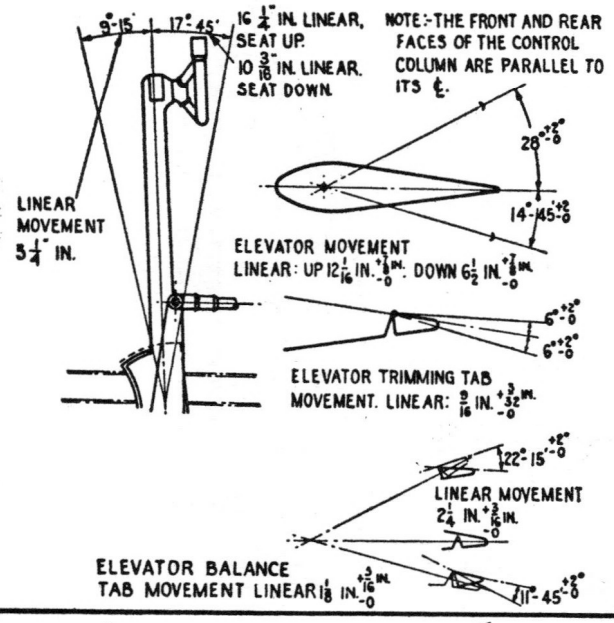

ELEVATOR. LOCK THE CONTROL COLUMN IN THE NEUTRAL POSITION. CHECK THE SETTING OF THE ELEVATORS WITH SETTING BOARDS, SEE FIG. 8. TO ADJUST THE PUSH-PULL CONTROLS SEE PARA. 20.

TRIMMING TAB. LOCK THE CONTROL COLUMN IN THE NEUTRAL POSITION. SET THE TRAILING EDGE OF THE TAB IN LINE WITH TRAILING EDGE OF THE ELEVATOR, WITH THE COCKPIT INDICATOR READING 0 DEGREES. TO SET THE TAB ADJUST THE TURNBUCKLE IN THE FUSELAGE JUST AFT OF THE TAIL PLANE REAR SPAR AND ON THE PORT SIDE OF FUSELAGE BETWEEN FORMERS 30 AND 31

BALANCE TAB. LOCK THE ELEVATOR CONTROL IN THE NEUTRAL POSITION. SET THE TRAILING EDGE OF THE TAB IN LINE WITH THE TRAILING EDGE OF THE ELEVATOR.

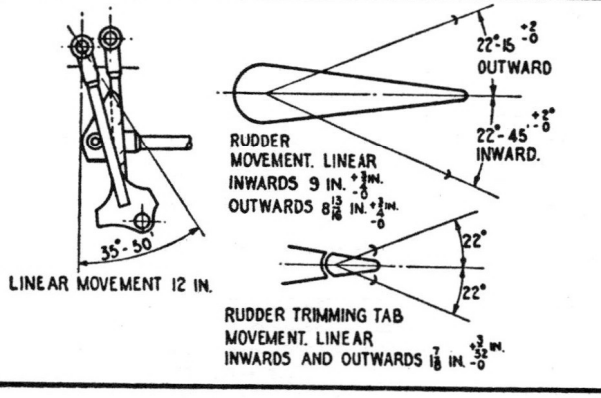

RUDDER. LOCK THE RUDDER CONTROL PANELS IN THE NEUTRAL POSITION AND FIT SETTING BOARD SEE FIG. 9. FOR ADJUSTMENT OF PUSH-PULL CONTROLS SEE PARA. 20. NOTE :- LINEAR MEASUREMENT IS TAKEN IMMEDIATELY ABOVE THE TRIMMING TAB.

TRIMMING TAB. LOCK THE RUDDER CONTROL PEDALS IN THE NEUTRAL POSITION. SET THE TRIMMING TAB IN LINE WITH THE RUDDER, WITH THE COCKPIT INDICATOR READING 0 DEGREES. TO SET THE TAB, ADJUST THE TURNBUCKLES BETWEEN FORMERS 30 AND 31 ON THE PORT SIDE OF THE FUSELAGE. FURTHER ADJUSTMENT MAY BE MADE IF REQUIRED AT THE TURNBUCKLES BETWEEN THE TAIL PLANE SPARS, ONE AT THE CENTRE OF THE FUSELAGE AND ONE BETWEEN TAIL PLANE RIBS 12 AND 13 ON EACH SIDE.

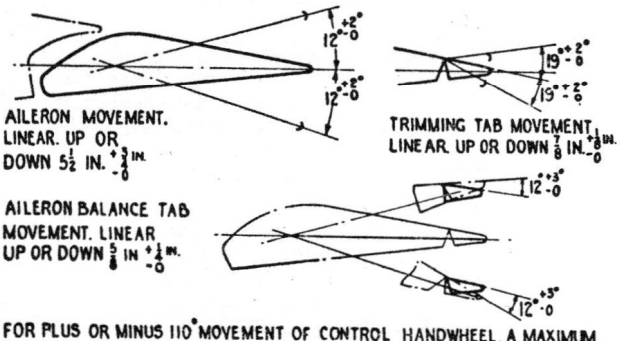

AILERONS. LOCK THE AILERON CONTROL CENTRAL AND RIG THE AILERONS IN LINE WITH TRAILING EDGE OF MAIN PLANE. AFTER TEST FLIGHT THE AILERON DROOP MAY BE UP TO A MAXIMUM OF 3/8" DIFFERENTIAL DROOP UP TO 1/4" IS PERMISSIBLE. TURNBUCKLES ARE PROVIDED ON THE PORT SIDE OF THE FUSELAGE. JUST FORWARD OF THE FRONT SPAR.

TRIMMING TAB. LOCK THE AILERON CONTROL IN THE NEUTRAL POSITION AND SET TRAILING EDGE OF TAB IN LINE WITH TRAILING EDGE OF AILERON, WITH THE COCKPIT INDICATOR READING 0 DEGREES. TO ADJUST, LOWER THE FLAPS TO GAIN ACCESS TO THE CABLES. WHEN THE TAB IS IN THE MID POSITION, THE TURNBUCKLES ON THE STARBOARD FORWARD CABLE SHOULD BE EQUI-DISTANT BETWEEN THE FAIRLEAD ON THE BRIDGE BRACKET AND RIB 32, AND THE TURNBUCKLE ON THE AFT CABLE EQUI-DISTANT BETWEEN THE FAIRLEAD AND RIB 25 ON THE PORT SIDE THE POSITIONS ARE REVERSED.

BALANCE TAB. LOCK THE AILERON CONTROL IN NEUTRAL POSITION. SET THE TRAILING EDGE OF THE TAB IN LINE WITH THE TRAILING EDGE OF THE AILERON.

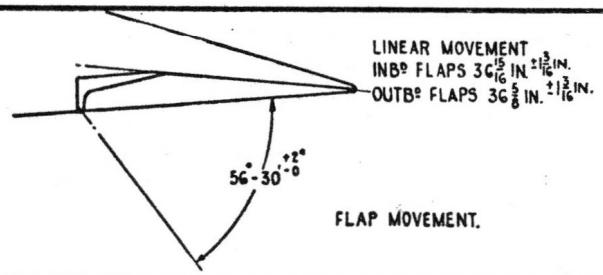

FLAPS SET THE FLAPS TO CLOSE COMPLETELY, THEN ADJUST SO THAT THE STARBOARD FLAPS DROOP 1" LOWER THAN THE PORT FLAPS. PUMP FLAPS UP AND CHECK WHETHER STARBOARD FLAPS CLOSE - A GAP OF ·188" TO ·25" CAN BE ACCEPTED.

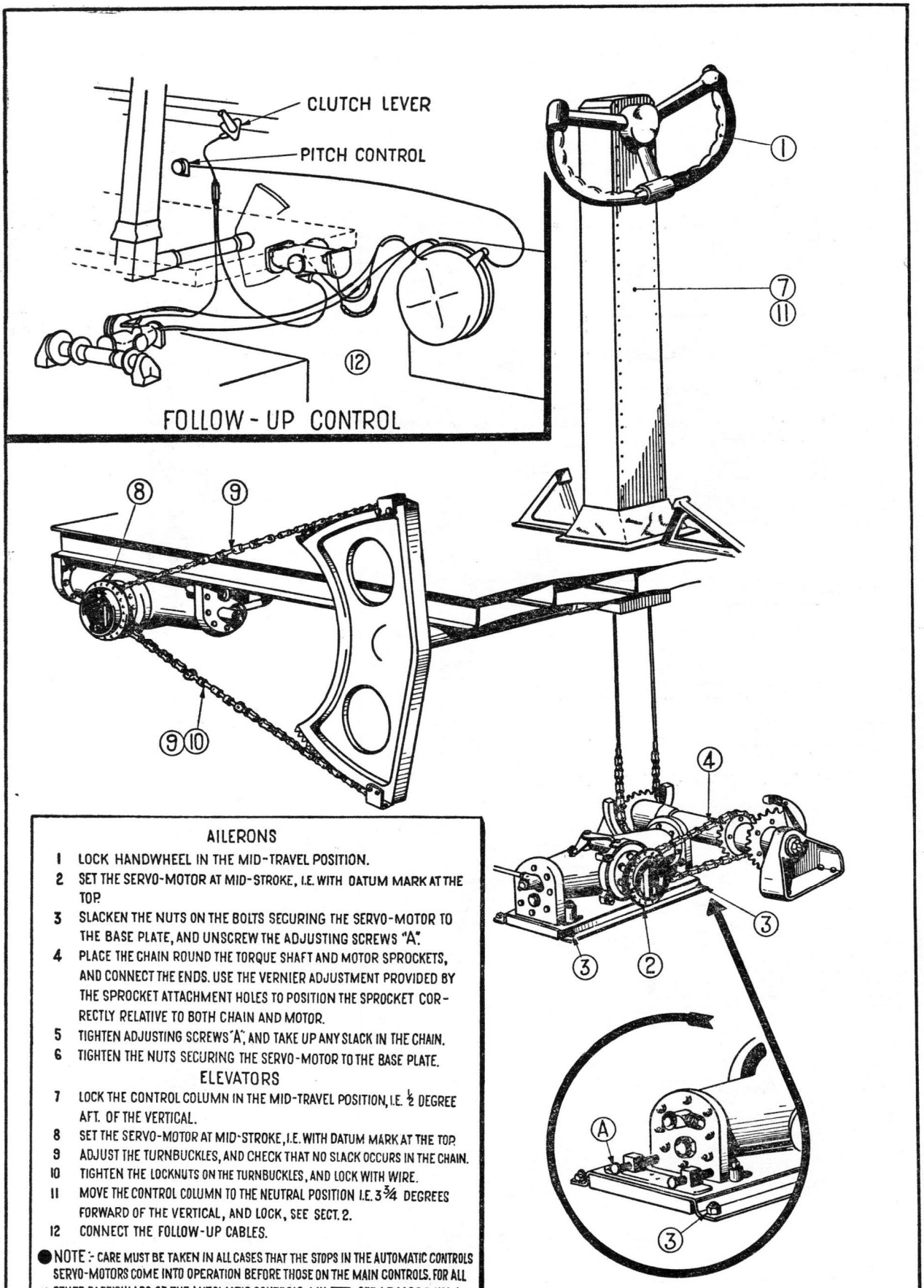

AILERONS

1 LOCK HANDWHEEL IN THE MID-TRAVEL POSITION.
2 SET THE SERVO-MOTOR AT MID-STROKE, I.E. WITH DATUM MARK AT THE TOP.
3 SLACKEN THE NUTS ON THE BOLTS SECURING THE SERVO-MOTOR TO THE BASE PLATE, AND UNSCREW THE ADJUSTING SCREWS "A".
4 PLACE THE CHAIN ROUND THE TORQUE SHAFT AND MOTOR SPROCKETS, AND CONNECT THE ENDS. USE THE VERNIER ADJUSTMENT PROVIDED BY THE SPROCKET ATTACHMENT HOLES TO POSITION THE SPROCKET CORRECTLY RELATIVE TO BOTH CHAIN AND MOTOR.
5 TIGHTEN ADJUSTING SCREWS "A", AND TAKE UP ANY SLACK IN THE CHAIN.
6 TIGHTEN THE NUTS SECURING THE SERVO-MOTOR TO THE BASE PLATE.

ELEVATORS

7 LOCK THE CONTROL COLUMN IN THE MID-TRAVEL POSITION, I.E. ½ DEGREE AFT. OF THE VERTICAL.
8 SET THE SERVO-MOTOR AT MID-STROKE, I.E. WITH DATUM MARK AT THE TOP.
9 ADJUST THE TURNBUCKLES, AND CHECK THAT NO SLACK OCCURS IN THE CHAIN.
10 TIGHTEN THE LOCKNUTS ON THE TURNBUCKLES, AND LOCK WITH WIRE.
11 MOVE THE CONTROL COLUMN TO THE NEUTRAL POSITION I.E. 3¾ DEGREES FORWARD OF THE VERTICAL, AND LOCK, SEE SECT. 2.
12 CONNECT THE FOLLOW-UP CABLES.

● NOTE :- CARE MUST BE TAKEN IN ALL CASES THAT THE STOPS IN THE AUTOMATIC CONTROLS SERVO-MOTORS COME INTO OPERATION BEFORE THOSE ON THE MAIN CONTROLS. FOR ALL OTHER PARTICULARS OF THE AUTOMATIC CONTROLS, MK. VIII, SEE A.P. 1469C. VOL. I.

11	SETTING AUTOMATIC CONTROLS	11

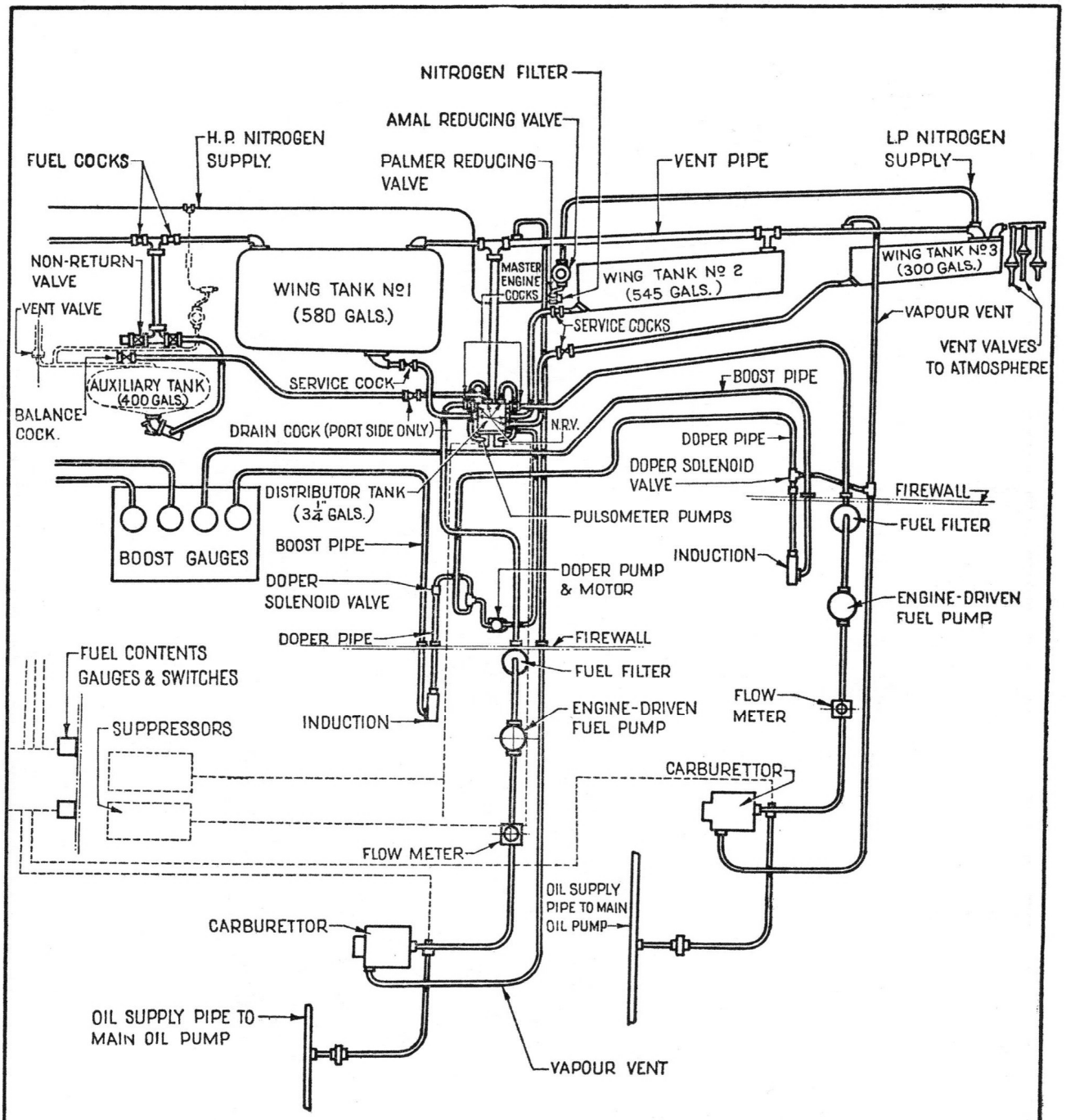

NOTE :- REFER ALSO TO SECTION 8, FIG.8

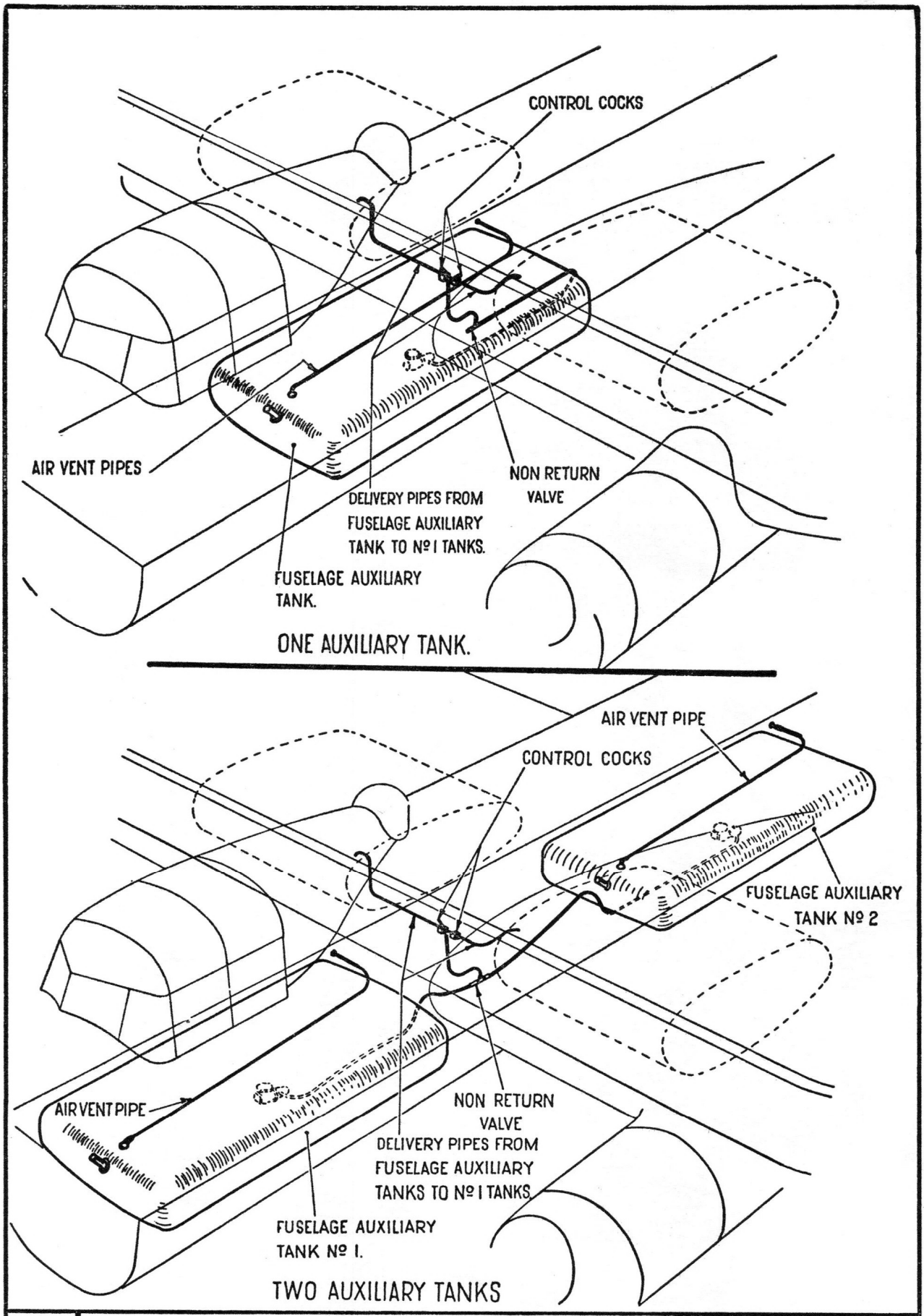

13 **AUXILIARY FUEL SYSTEM** 13

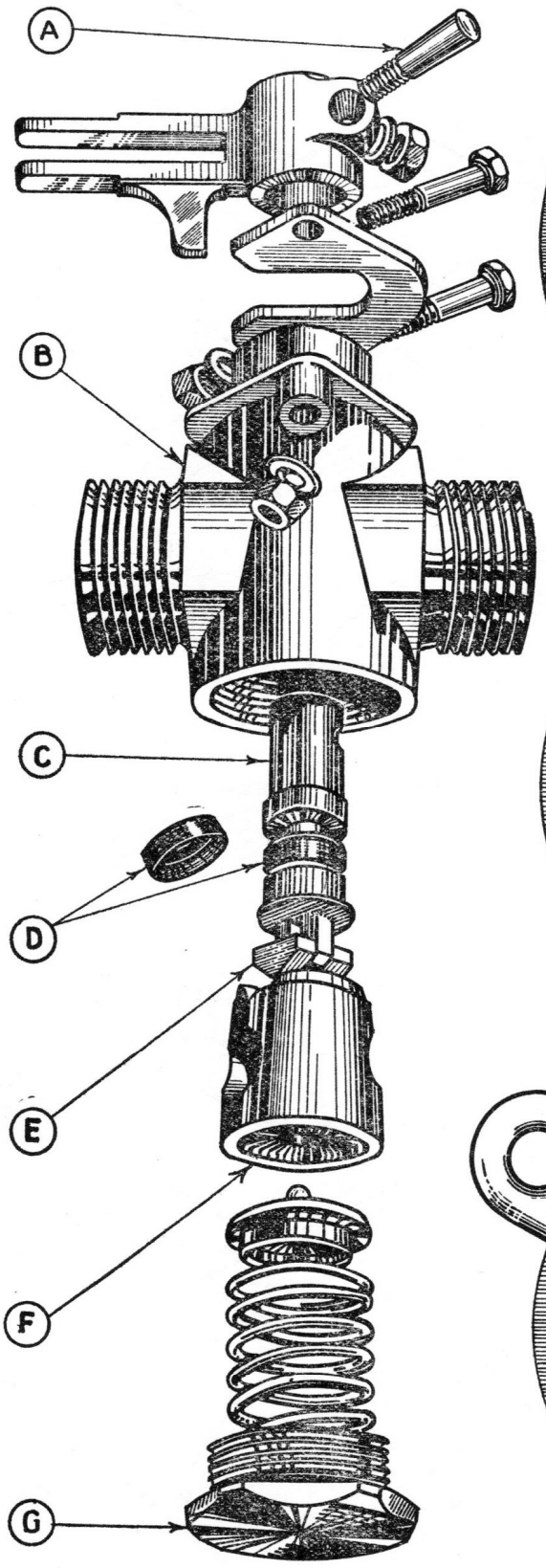

MASTER ENGINE COCK

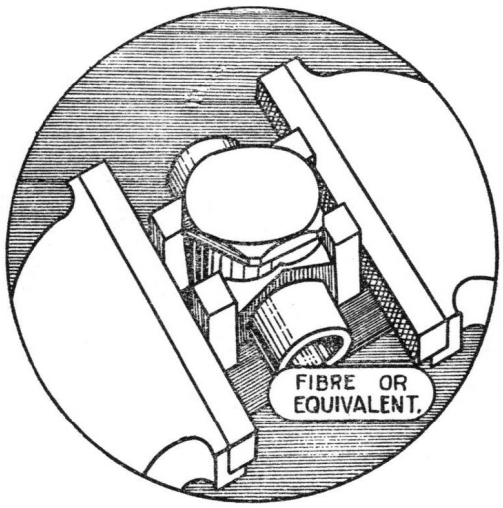

IMPROVISED ASSEMBLY FIXTURE.

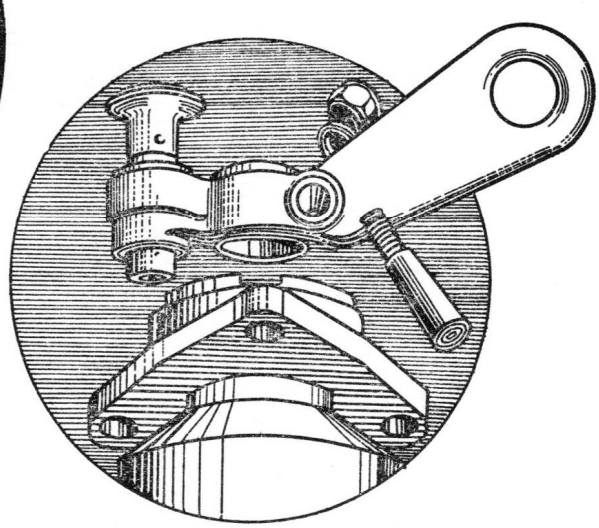

HANDLE OF DRAIN COCK .

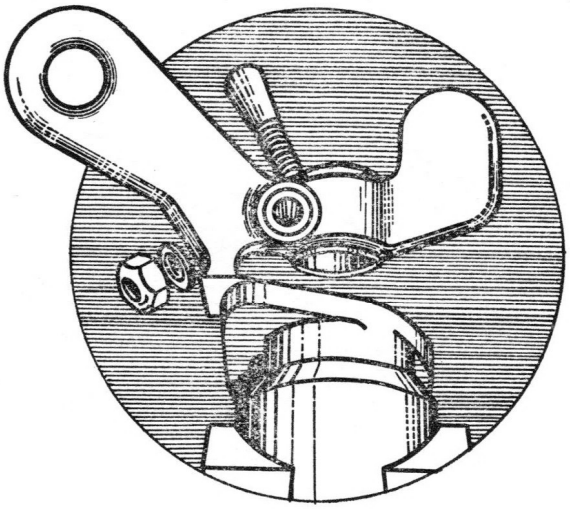

HANDLE OF COCK FOR AUXILIARY FUEL SYSTEM.

14	TYPICAL FUEL COCK DETAILS	14

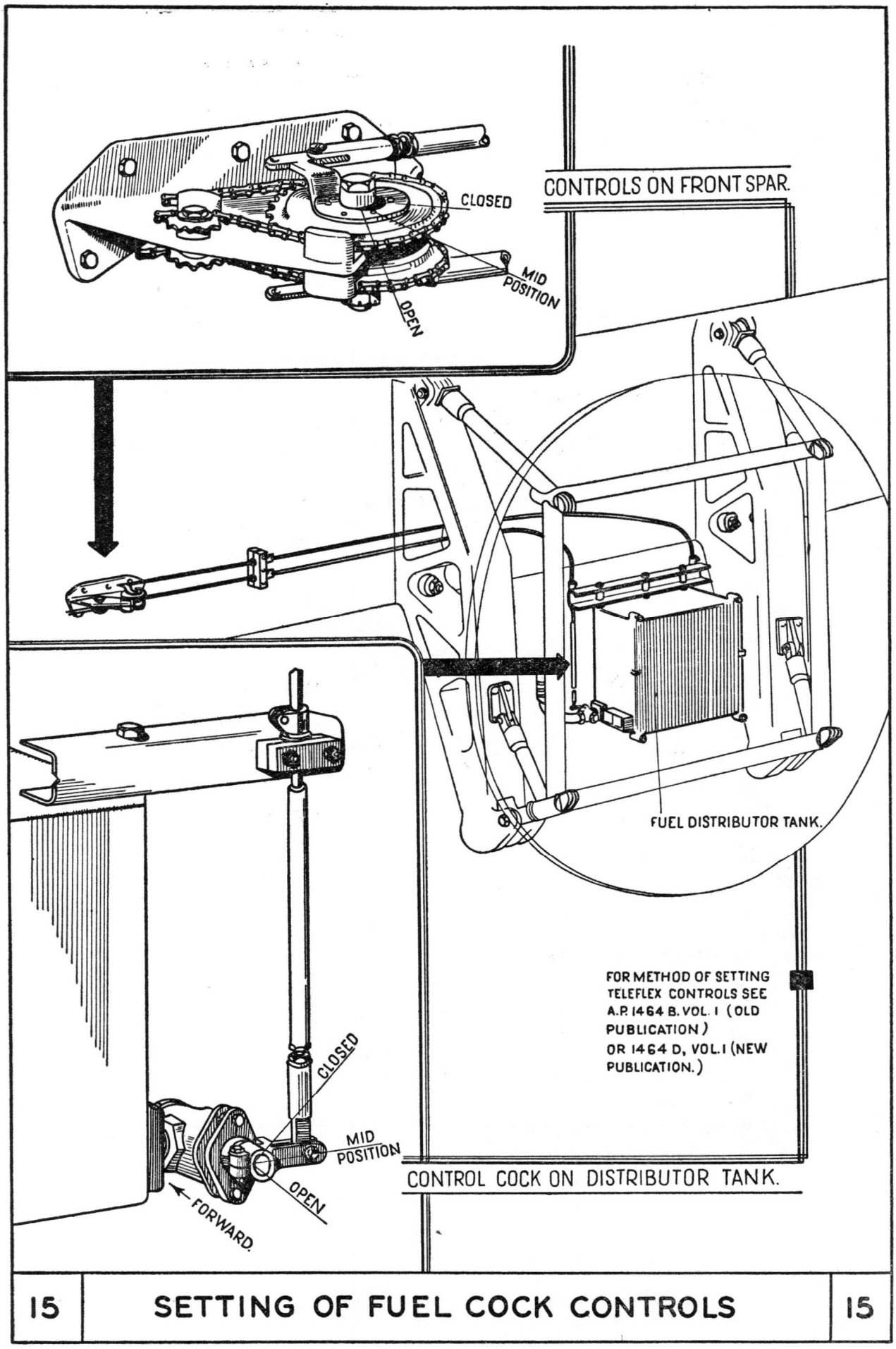

15	SETTING OF FUEL COCK CONTROLS	15

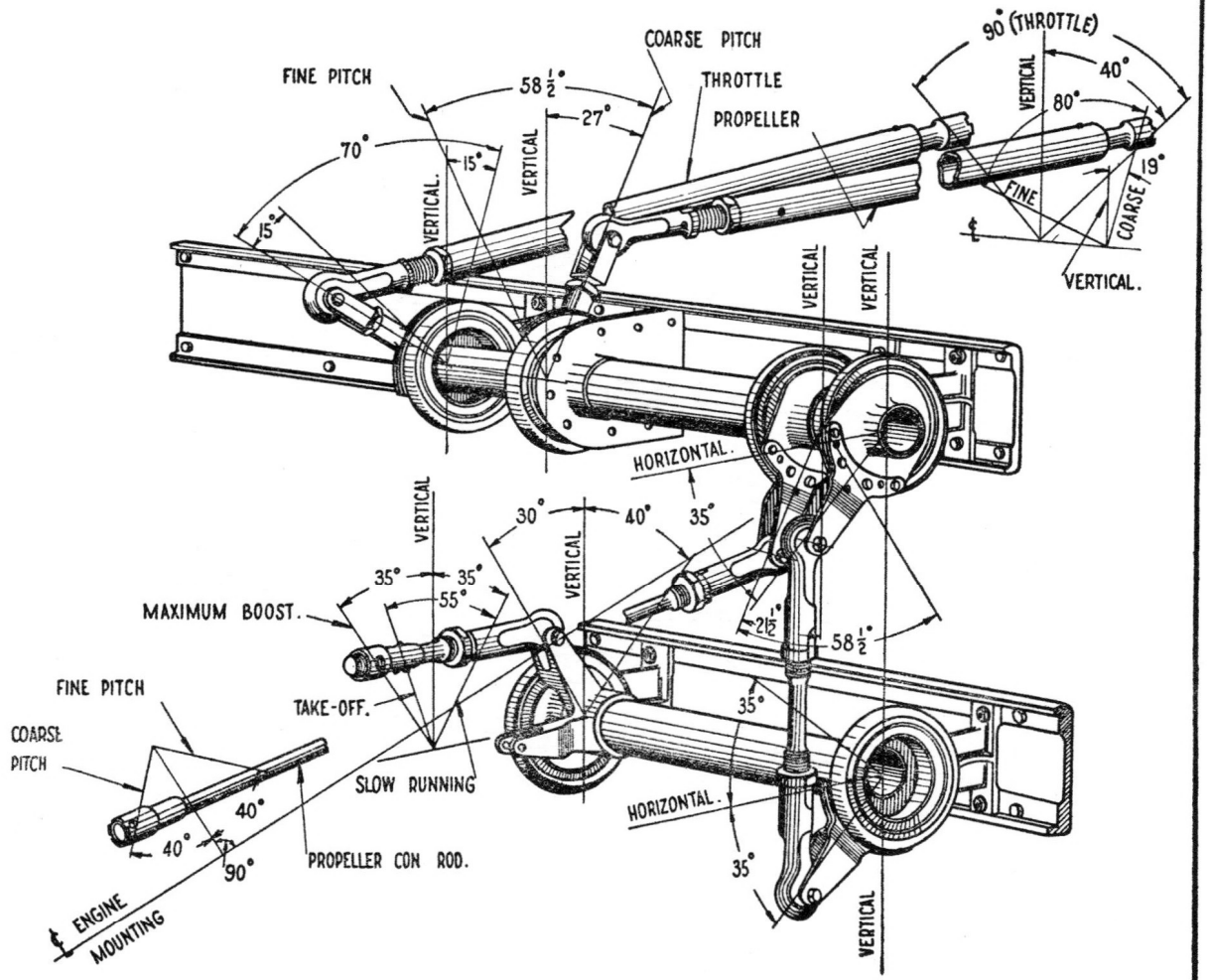

NOTE :- THE PROPELLER IS SHOWN IN COARSE PITCH POSITION

THE THROTTLE IS SHOWN IN MAXIMUM BOOST

THE THEORETICAL ANGULAR MOVEMENTS FOR THROTTLE AND PROPELLER AT CONTROL BOXES ON SPAR FACE ARE 100° AND 90° RESPECTIVELY 10° HAS BEEN DEDUCTED FROM EACH TO ALLOW FOR BACKLASH AND LOST MOTION ANY NECCESSARY CORRECTIONS THAT MAY BE REQUIRED MAY BE OBTAINED BY ADJUSTING LEVERS ON FIREWALL UPPER C/SHAFT ASSEMBLY ALONG WITH LENGTHS OF CON-RODS BETWEEN SPAR AND FIREWALL

THE VERTICAL AND HORIZONTAL DATUM LINES ARE SHOWN WITH THE AIRCRAFT IN THE RIGGING POSITION

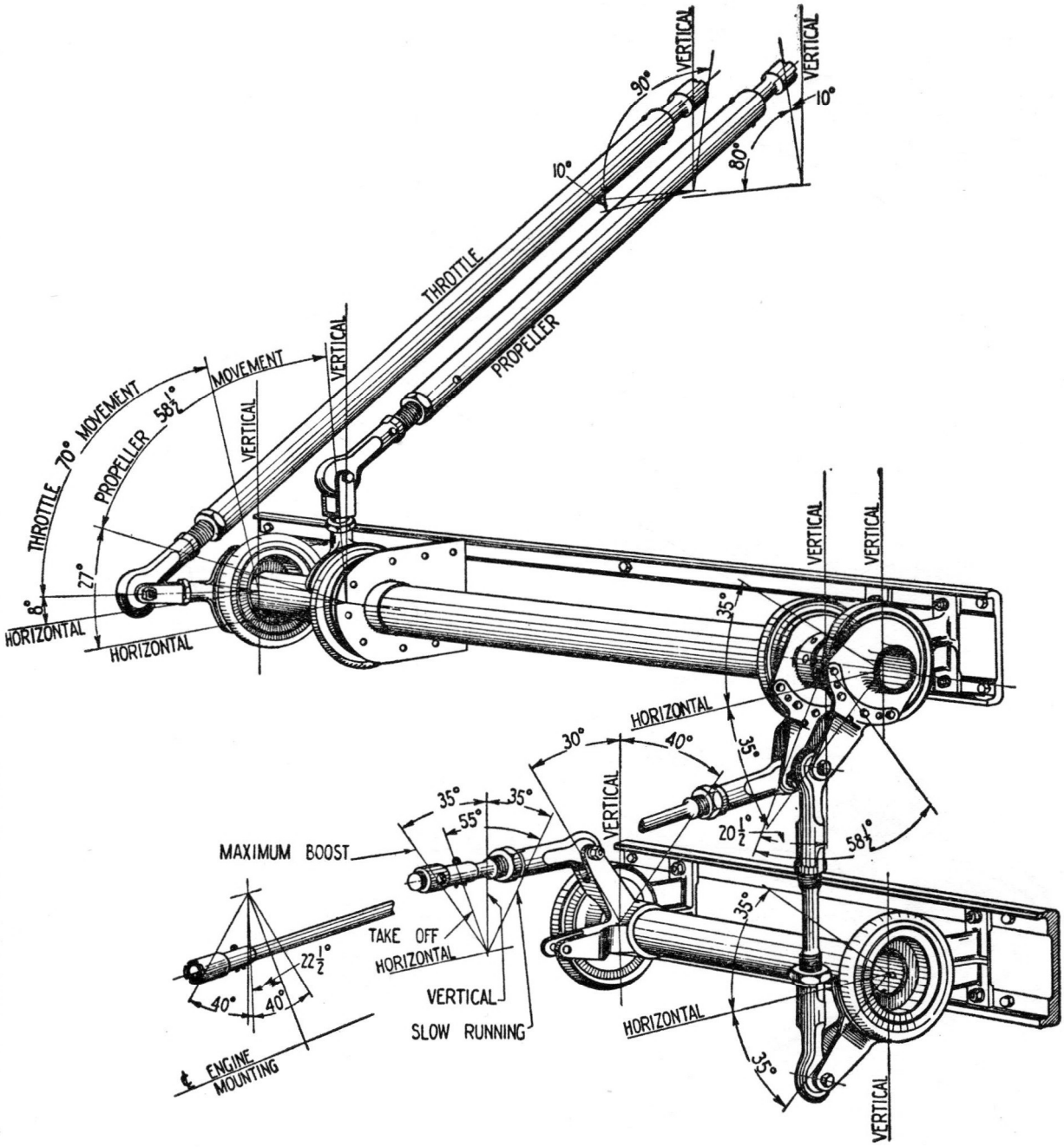

NOTE :– THE PROPELLER IS SHOWN IN COARSE PITCH POSITION.

THE THROTTLE IS SHOWN IN MAXIMUM BOOST

THE THEORETICAL ANGULAR MOVEMENTS FOR THROTTLE AND PROPELLER AT CONTROL BOXES ON SPAR FACE ARE 100° AND 90° RESPECTIVELY 10° HAS BEEN DEDUCTED FROM EACH TO ALLOW FOR BACKLASH AND LOST MOTION ANY NECESSARY CORRECTIONS THAT MAY BE REQUIRED MAY BE OBTAINED BY ADJUSTING LEVERS ON FIREWALL UPPER C/SHAFT ASSEMBLY ALONG WITH CON-RODS BETWEEN SPAR AND FIREWALL

THE VERTICAL AND HORIZONTAL DATUM LINES ARE SHOWN WITH THE AIRCRAFT IN THE RIGGING POSITION.

17	ENGINE CONTROLS SETTING–OUTBOARD	17

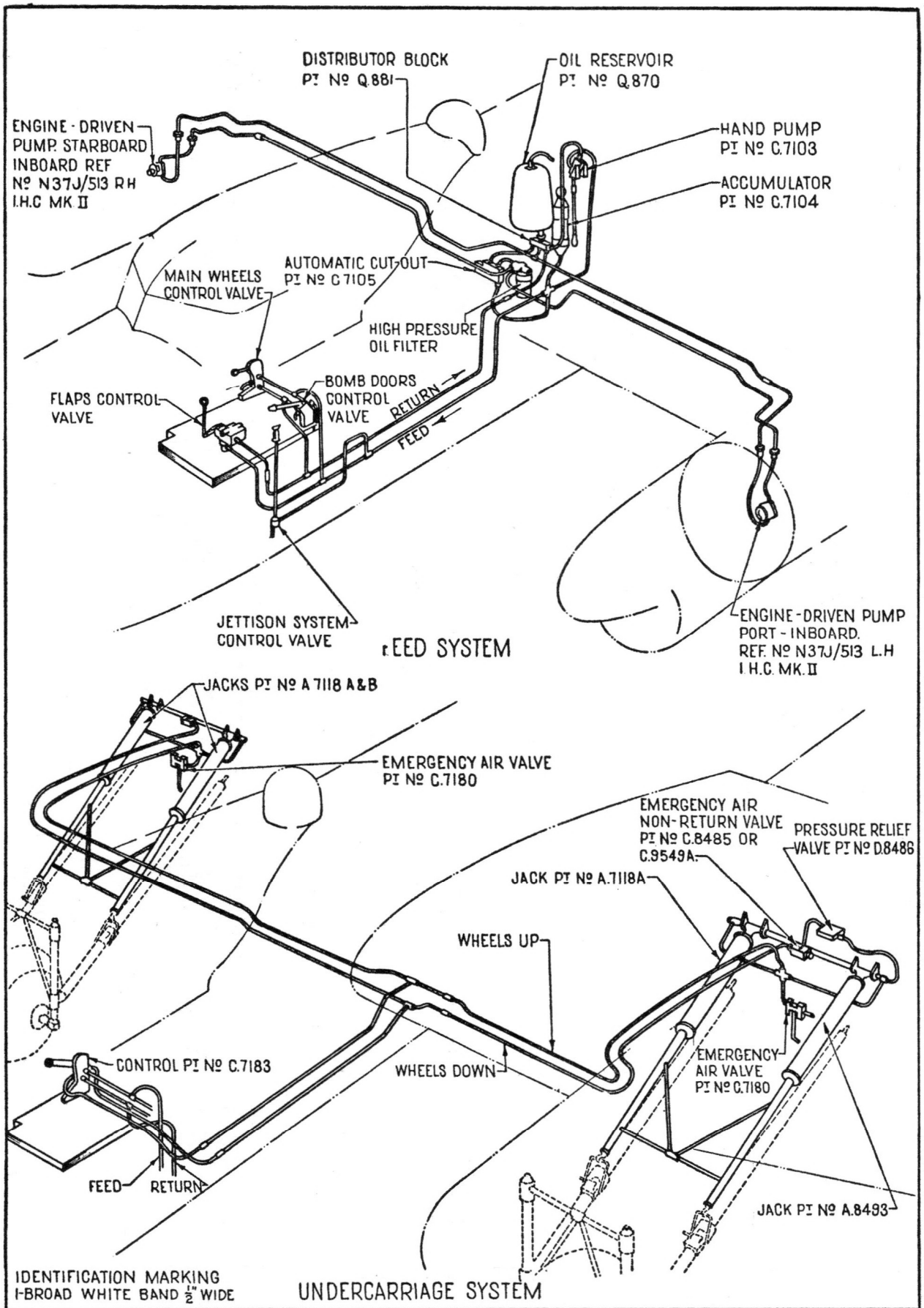

HYDRAULICS – FEED & UNDERCARRIAGE SYSTEMS

18

18

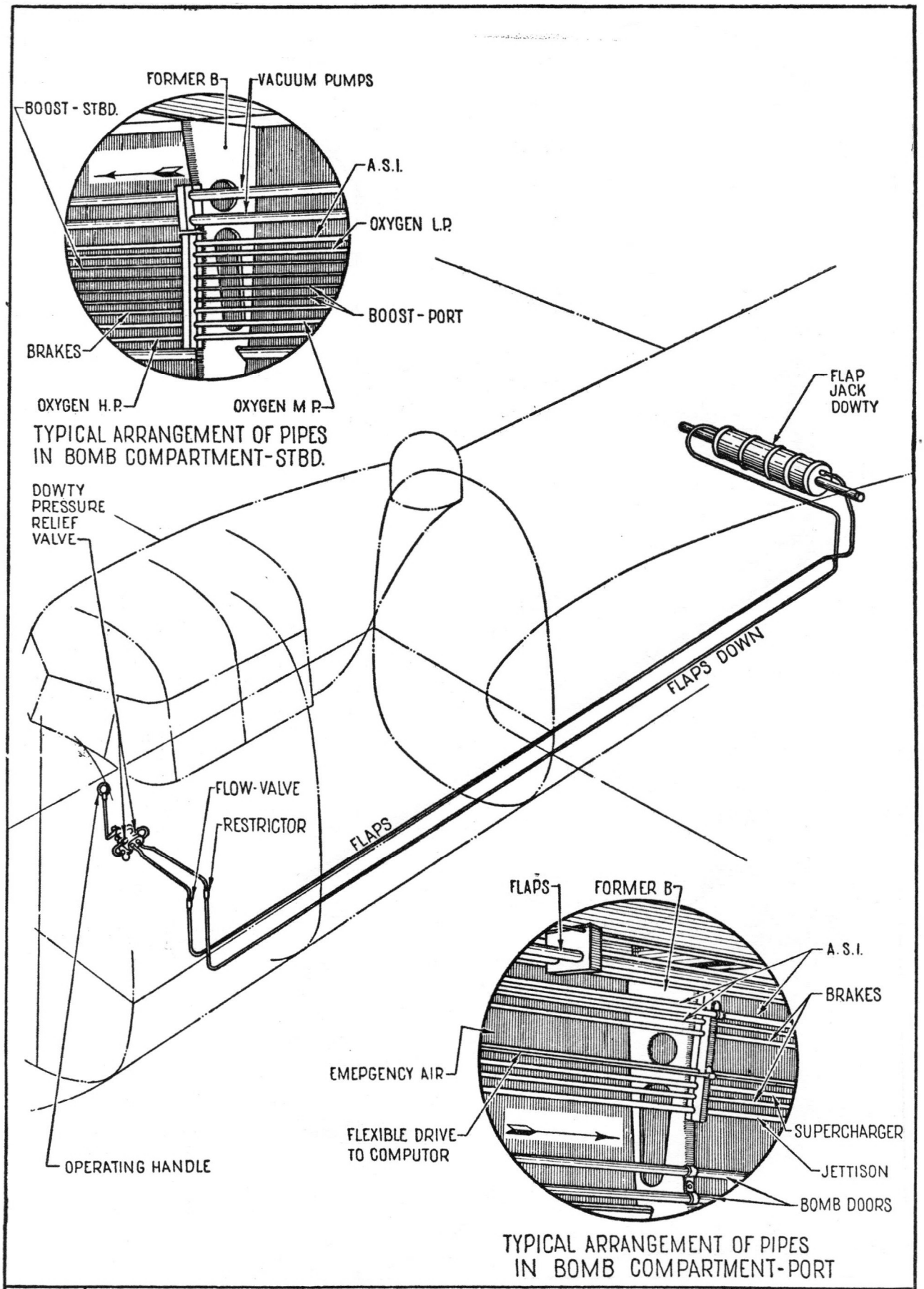

19	HYDRAULIC SYSTEM – FLAPS	19

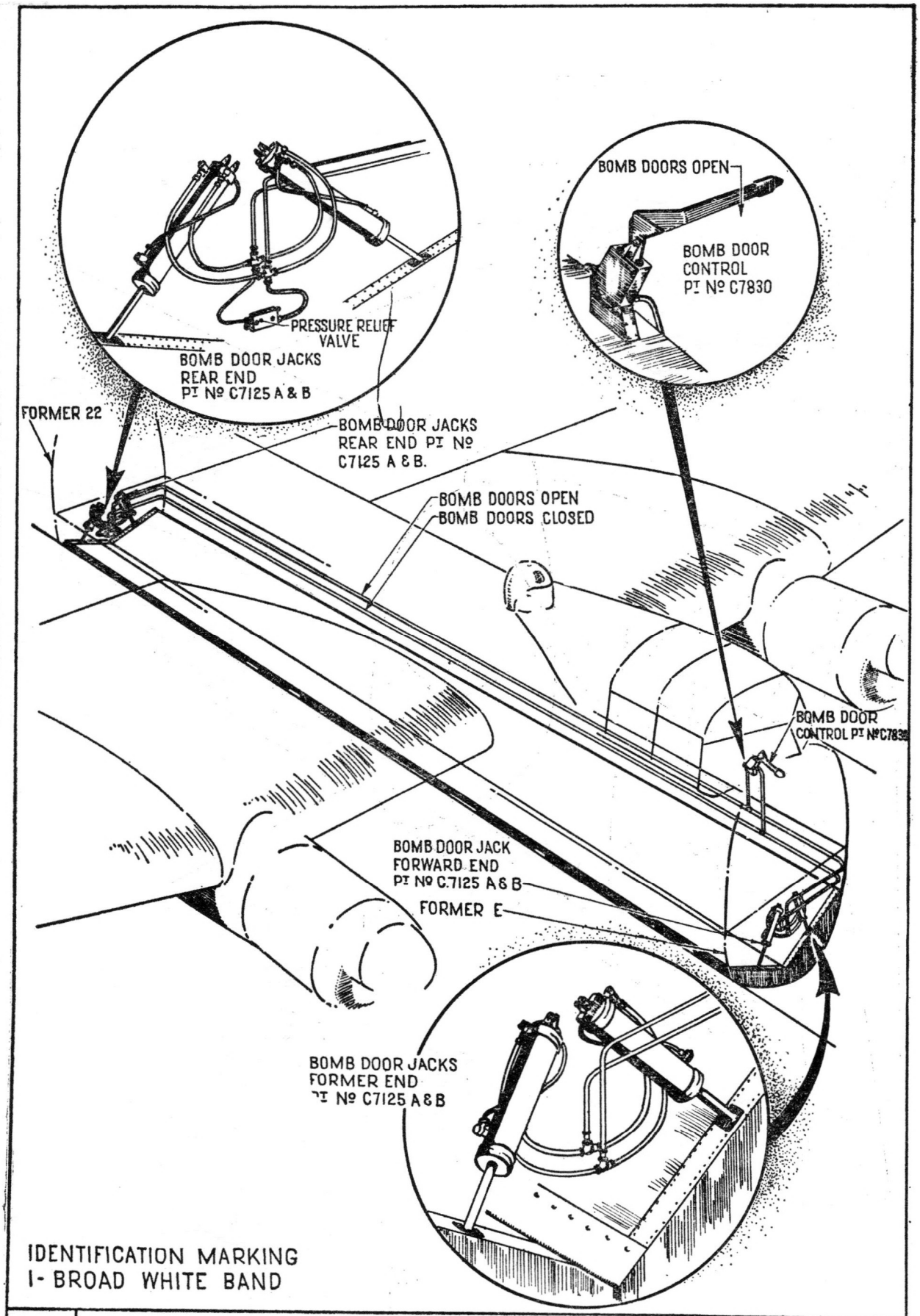

20	HYDRAULIC SYSTEM – BOMB DOORS	20

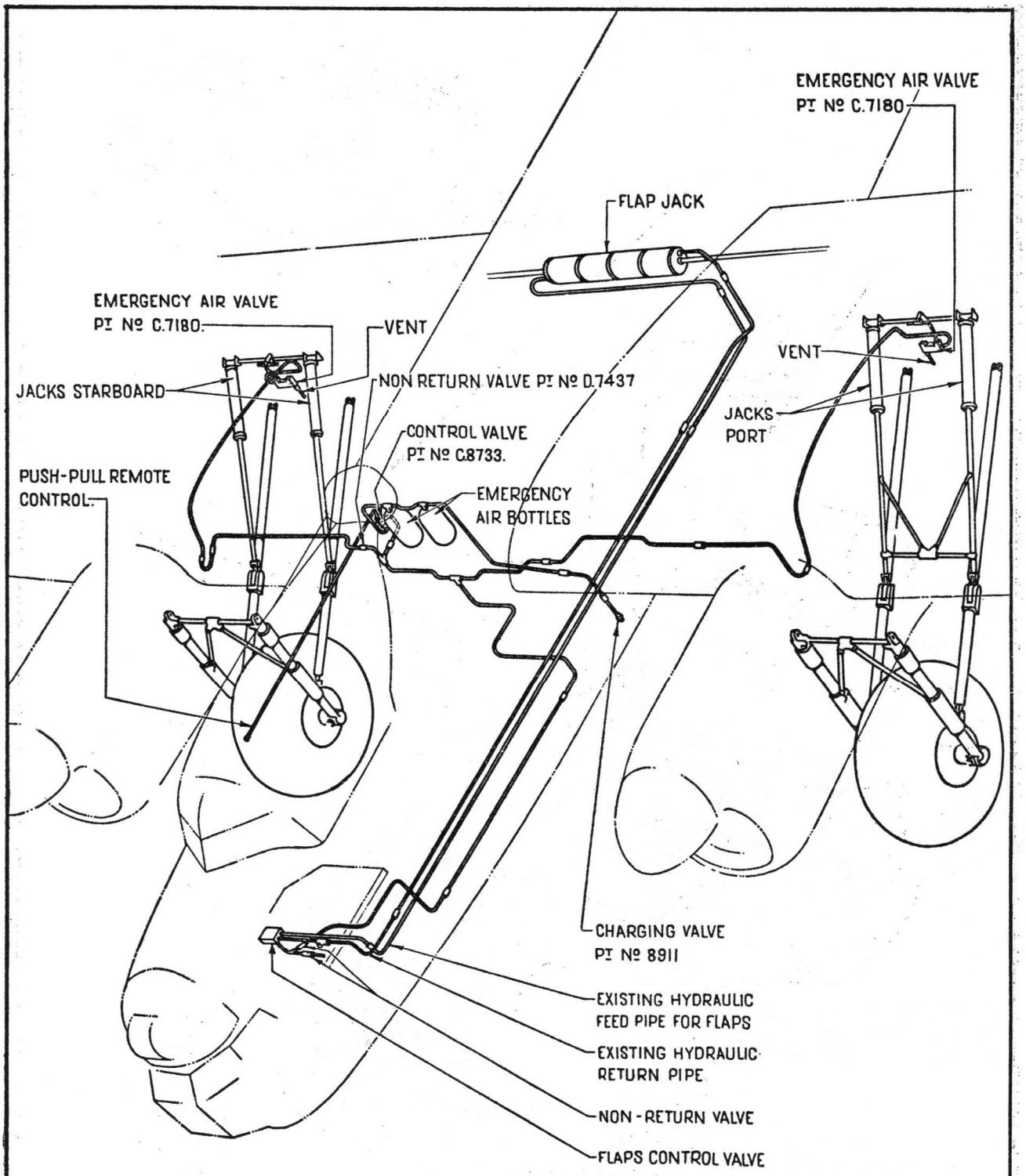

21	EMERGENCY AIR SYSTEM	21

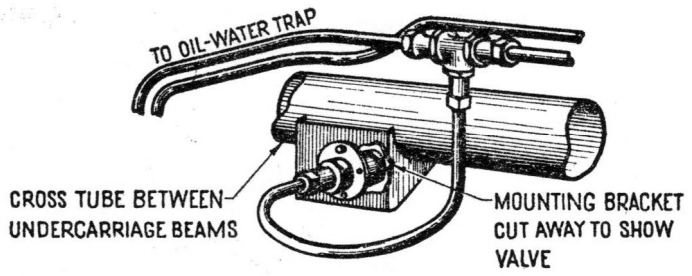

DETAIL OF AIR-CHARGING VALVE

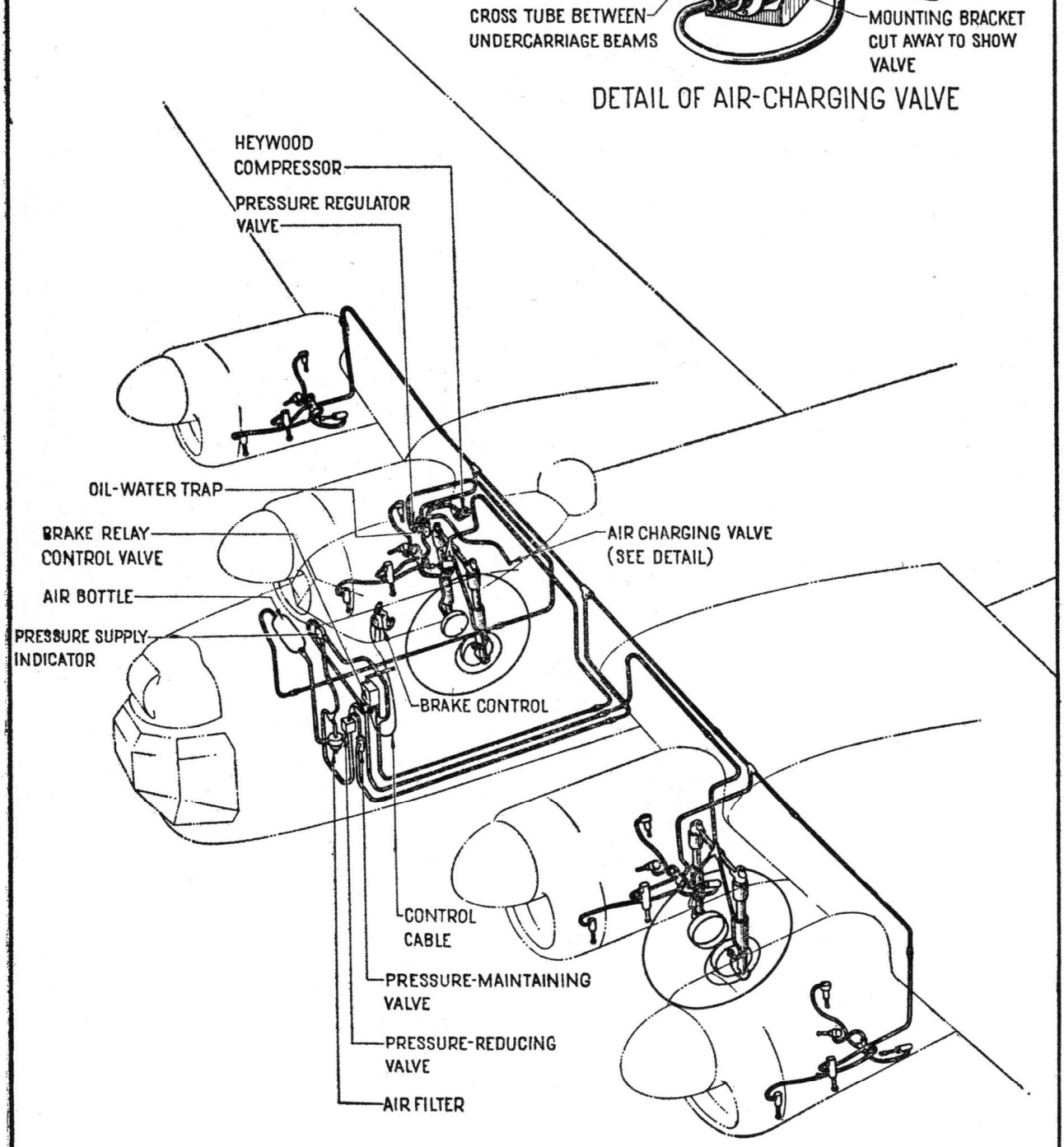

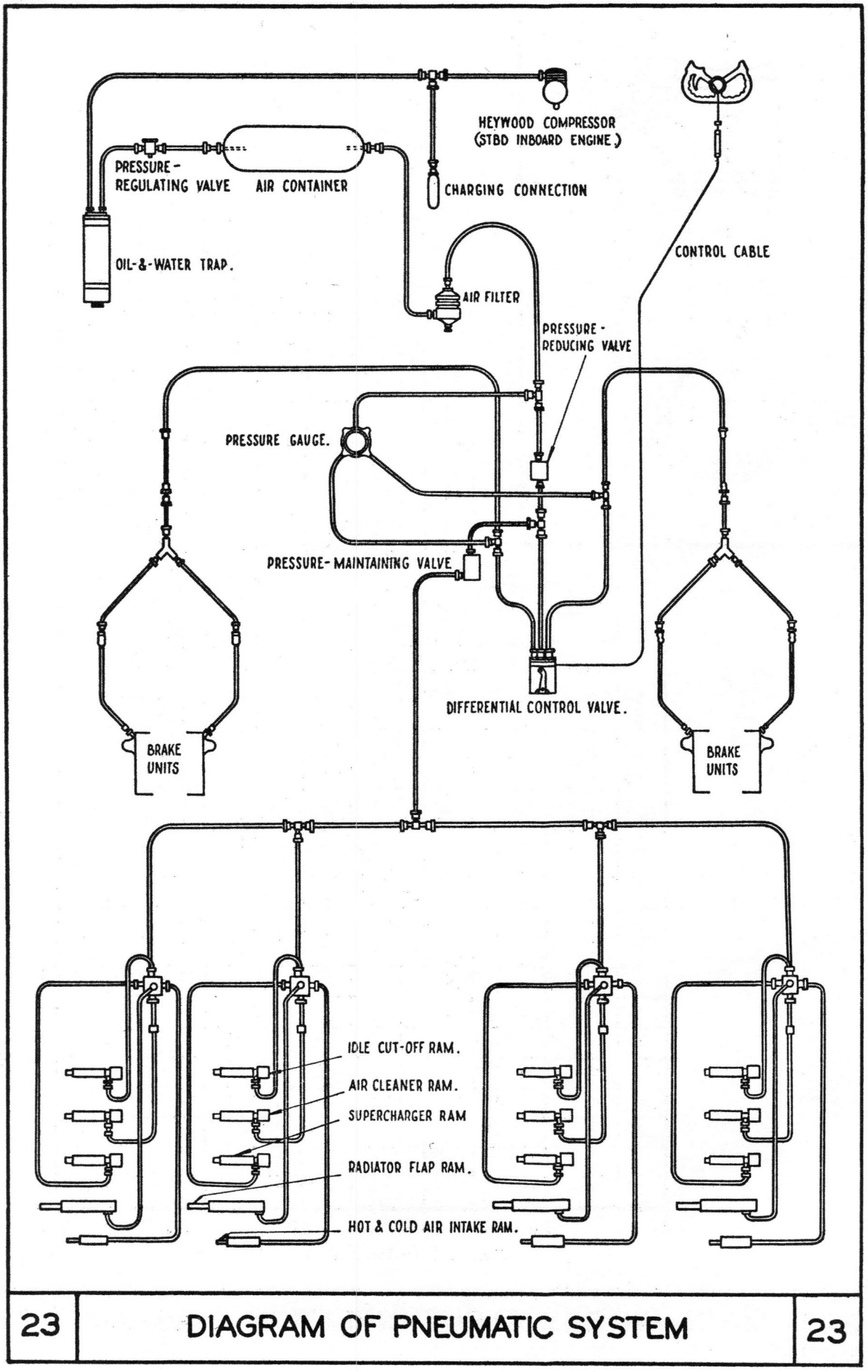

23 DIAGRAM OF PNEUMATIC SYSTEM 23

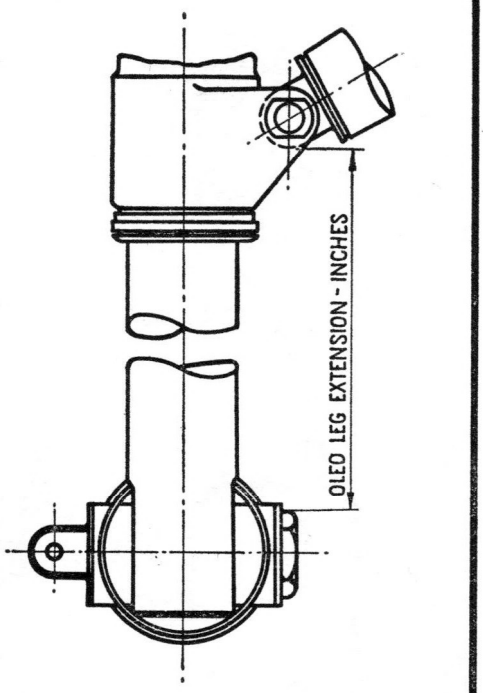

EXAMPLE OF USE
IF THE EXTENSION OF THE UNDERCARRIAGE OLEO LEG IS 12·5 IN. THE AIR PRESSURE IN IT SHOULD BE BETWEEN 1875 AND 1950 LB./SQ. IN.

MAXIMUM
MINIMUM

27 26 25 24 23 22 21 20 19 18 17 16 15 14 13 12 11

AIR PRESSURE IN SHOCK ABSORBER - HUNDREDS OF POUNDS PER SQUARE INCH.

16·0 15·0 14·0 13·0 12·0 11·0

OLEO LEG EXTENSION - INCHES

24 MAIN WHEEL STRUT INFLATION DIAGRAM 24

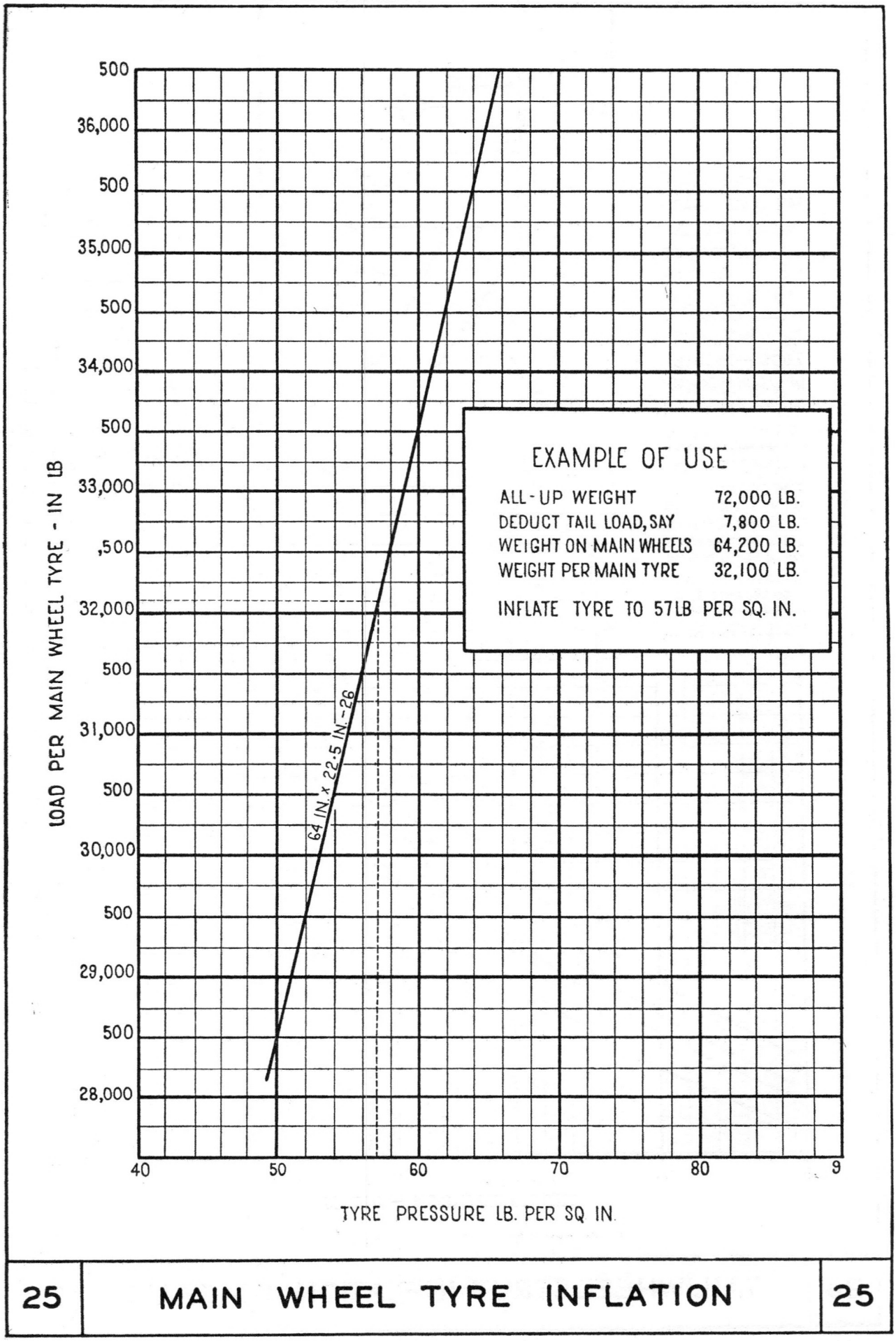

25	MAIN WHEEL TYRE INFLATION	25

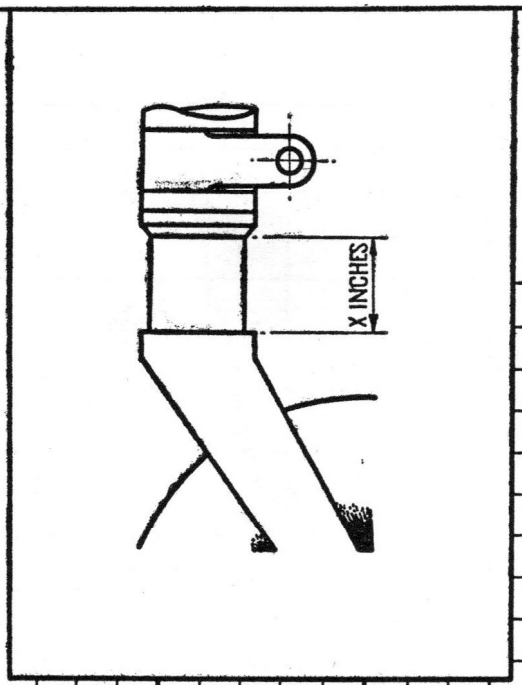

TAIL WHEEL LOAD
UNDER 7,800 LB.
INFLATION PRESSURE
LEG FULLY EXTENDED
650 - 700 LB./SQ.IN.

TAIL WHEEL LOAD
7,800 - 8,500 LB.
INFLATION PRESSURE
LEG FULLY EXTENDED
725 - 775 LB./SQ.IN.

EXAMPLE OF USE

IF THE EXTENSION OF THE TAIL WHEEL STRUT (I.E. 'X' IN) IS 2·5 IN. AND THE TAIL WHEEL LOAD IS UNDER 7,800 LB. THE AIR PRESSURE IN THE LEG SHOULD BE BETWEEN 1,000 AND 1,077 LB./SQ.IN.

LEG FULLY EXTENDED
4·92 IN.

AIR PRESSURE IN SHOCK ABSORBER - HUNDREDS OF POUNDS PER SQUARE INCH.

22 21 20 19 18 17 16 15 14 13 12 11 10 9 8 7 6

5 4 3 2 1 0

OLEO LEG EXTENSION - INCHES

26 TAIL WHEEL STRUT INFLATION DIAGRAM 26

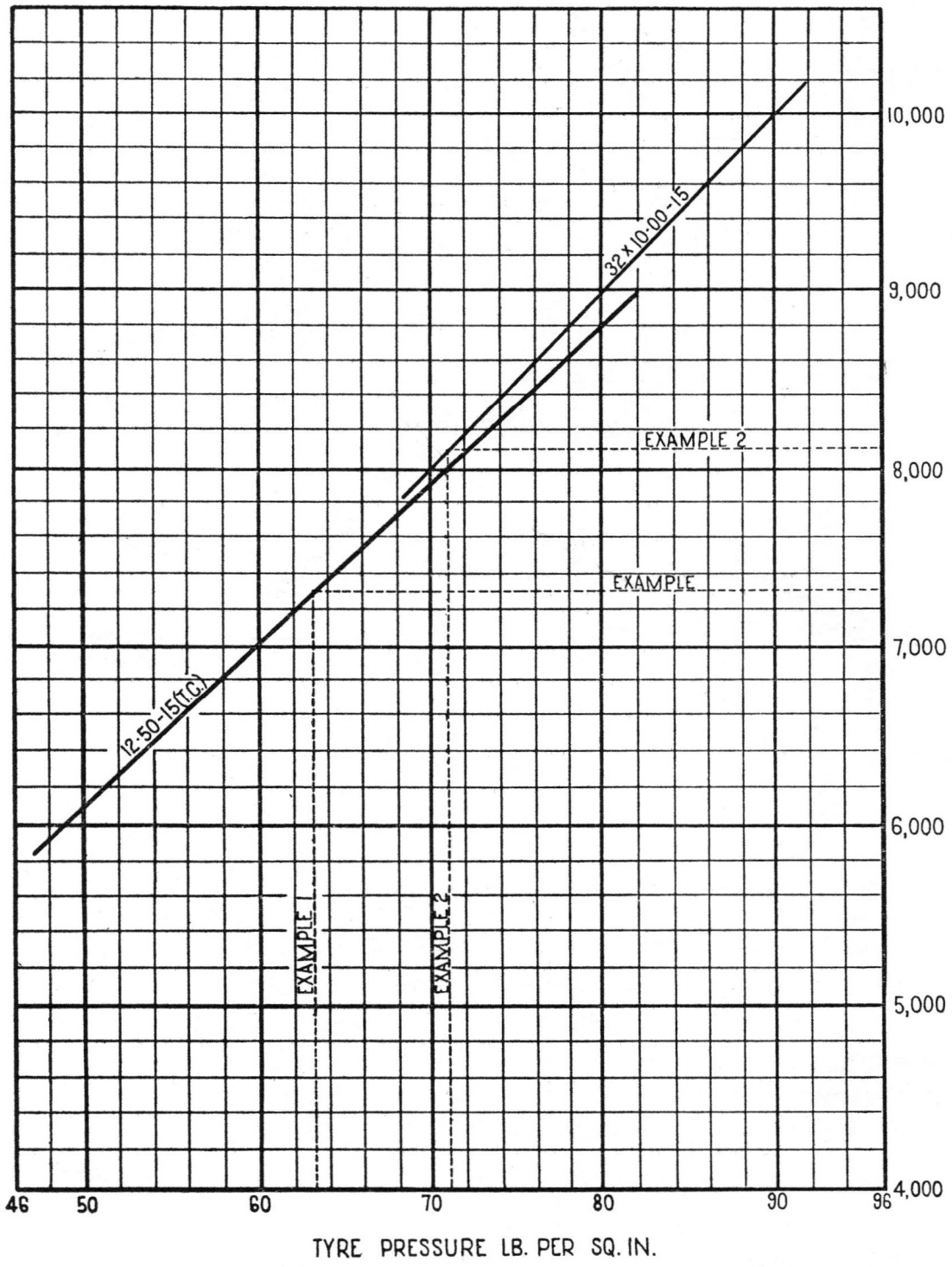

EXAMPLES OF USE

1. TWIN-CONTACT TYRE : NX. R 30 (12·50 IN. - 10 IN.)
   TAIL WHEEL LOAD 7,300 LB., TYRE PRESSURE
   63 LB. PER SQ. IN.
2. NORMAL SECTION TYRE : F.F, ER 17-N (32 IN. x 10·000 IN.-15 IN.)
   TAIL WHEEL LOAD 8,100 LB., TYRE PRESSURE 71 LB. PER SQ. IN.

27 TAIL WHEEL TYRE INFLATION 27

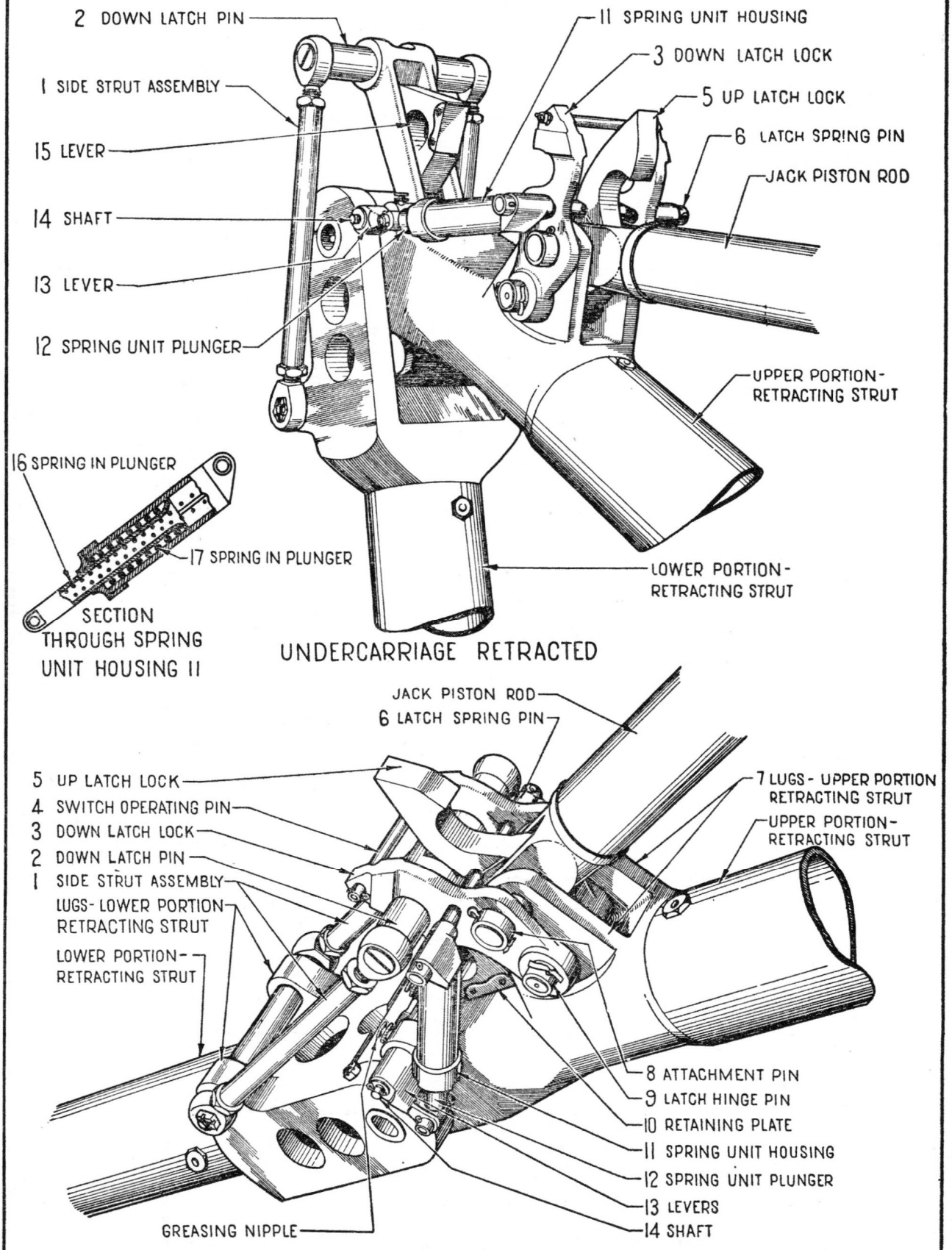
2 DOWN LATCH PIN
11 SPRING UNIT HOUSING
3 DOWN LATCH LOCK
1 SIDE STRUT ASSEMBLY
5 UP LATCH LOCK
15 LEVER
6 LATCH SPRING PIN
JACK PISTON ROD
14 SHAFT
13 LEVER
12 SPRING UNIT PLUNGER
UPPER PORTION - RETRACTING STRUT
16 SPRING IN PLUNGER
17 SPRING IN PLUNGER
LOWER PORTION - RETRACTING STRUT
SECTION THROUGH SPRING UNIT HOUSING 11
UNDERCARRIAGE RETRACTED
JACK PISTON ROD
6 LATCH SPRING PIN
5 UP LATCH LOCK
4 SWITCH OPERATING PIN
3 DOWN LATCH LOCK
2 DOWN LATCH PIN
1 SIDE STRUT ASSEMBLY
LUGS - LOWER PORTION RETRACTING STRUT
LOWER PORTION - RETRACTING STRUT
7 LUGS - UPPER PORTION RETRACTING STRUT
UPPER PORTION - RETRACTING STRUT
8 ATTACHMENT PIN
9 LATCH HINGE PIN
10 RETAINING PLATE
11 SPRING UNIT HOUSING
12 SPRING UNIT PLUNGER
13 LEVERS
14 SHAFT
GREASING NIPPLE
UNDERCARRIAGE LOCKED "DOWN"

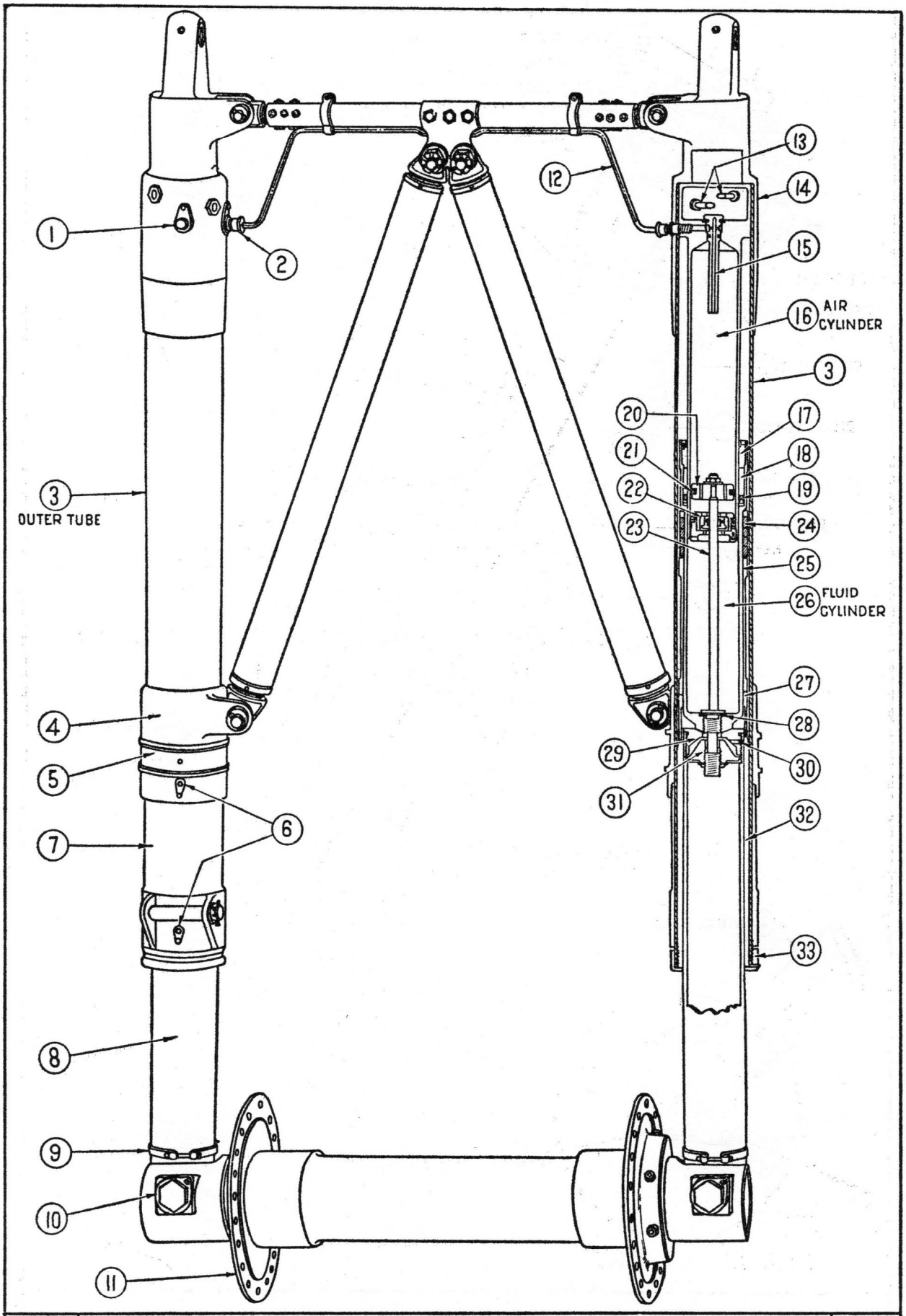

29 MAIN WHEEL SHOCK-ABSORBER STRUTS 29

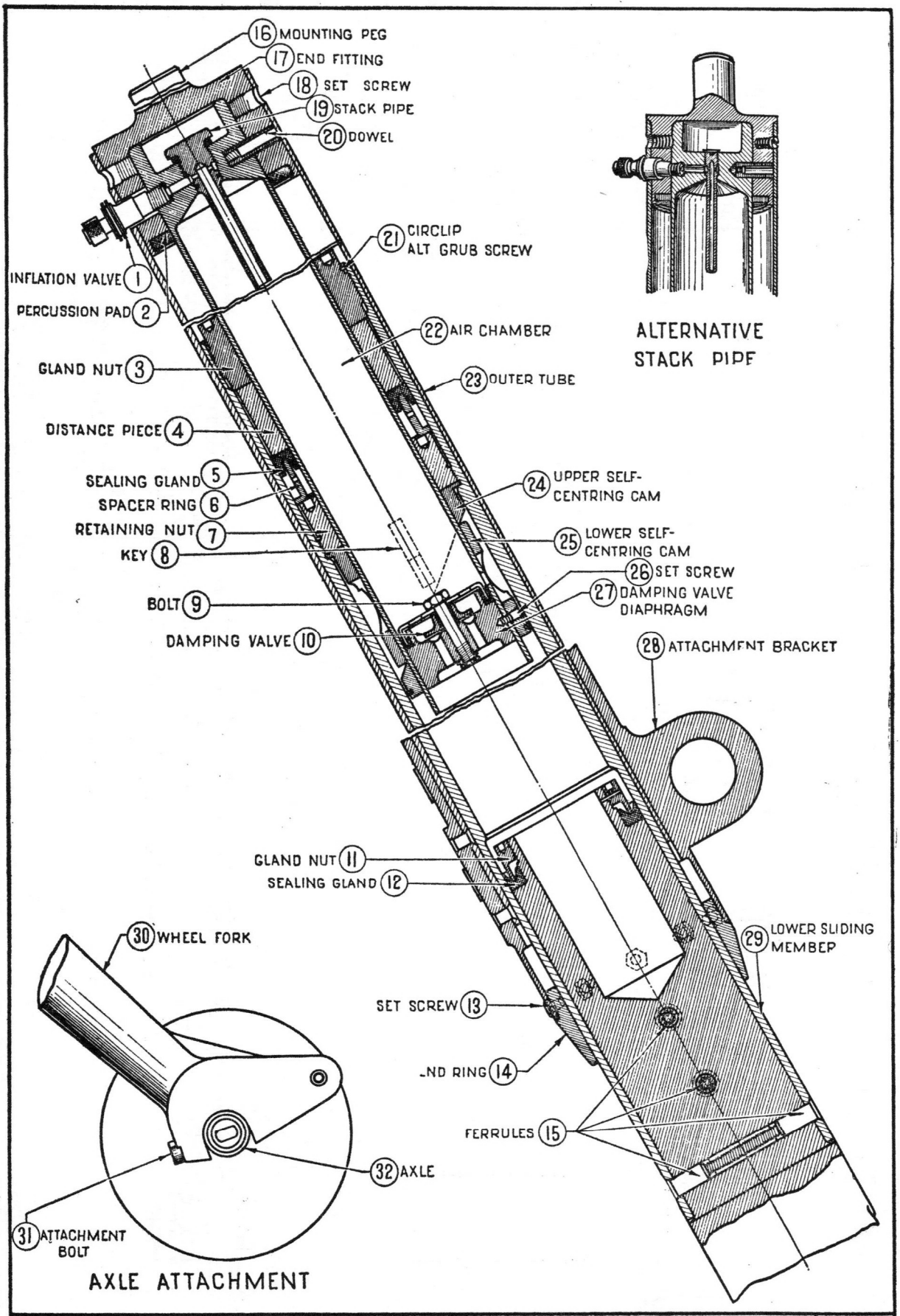

30	TAIL WHEEL SHOCK-ABSORBER STRUT	30

SYMPTOM	FAULT	PROBABLE CAUSE	REMEDY
ALL SERVICES INOPERATIVE	LOSS OF PRESSURE	FAILURE OF PUMP(S)	FIT NEW PUMP(S)
ALL SERVICES OPERATIVE BUT NO PRESSURE SHOWN ON GAUGE	LOSS OF PRESSURE	FAULTY GAUGE	FIT NEW GAUGE
EXTERNAL LEAKAGE	LOSS OF PRESSURE	FAULTY CONNECTIONS	TIGHTEN CONNECTIONS AND IF NECESSARY FIT NEW SEALING WASHERS OR COUPLINGS
SLUGGISH MOVEMENTS OF ALL SERVICES	INTERNAL LEAKAGE	EXCESSIVE CLEARANCE IN ENGINE DRIVEN PUMP(S) ALLOWING FLUID TO ESCAPE FROM THE PRESSURE SIDE TO THE SUCTION SIDE OF THE PUMP(S)	FIT NEW PUMP(S)
SLUGGISH MOVEMENT OF A PARTICULAR SERVICE	INTERNAL LEAKAGE	FLUID LEAKAGE PAST GLANDS IN CONTROL VALVE	FIT NEW GLANDS
SAGGING OF FLAPS, OR LIFTING WHEN LOWERED IN FLIGHT	INTERNAL LEAKAGE	FLUID LEAKAGE PAST VALVE IN CUT-OUT	DISMANTLE VALVE AND INSPECT FOR WEAR IF NECESSARY FIT NEW CUT-OUT
CIRCUIT OPERATING TIMES EXCESSIVE AFTER BLEEDING	INTERNAL LEAKAGE	FLUID LEAKAGE PAST GLANDS IN JACKS	FIT NEW GLANDS
OPERATING TIMES SLOW BACKLASH AT FLAPS LOAD ON HAND PUMP VERY LIGHT AND SPONGY	AIR IN THE SYSTEM		BLEED THE CIRCUIT (SEE PARA. 50 - 52)
INCREASE OF LOAD		(I) MAL-ALIGNMENT OF JACKS, CAUSING SIDE LOAD ON EXTENDED PISTON ROD. (II) MECHANICAL INTERFERENCE BETWEEN MOVING PARTS. (III) PRESENCE OF FOREIGN MATTER BETWEEN MOVING PARTS. (IV) INCREASE OF FRICTION DUE TO EXCESSIVE TIGHTENING OF GLANDS, ETC.	

The following drawings of alighting gear service tools are required for the maintenance of the main undercarriage and tail wheel shock-absorber struts.

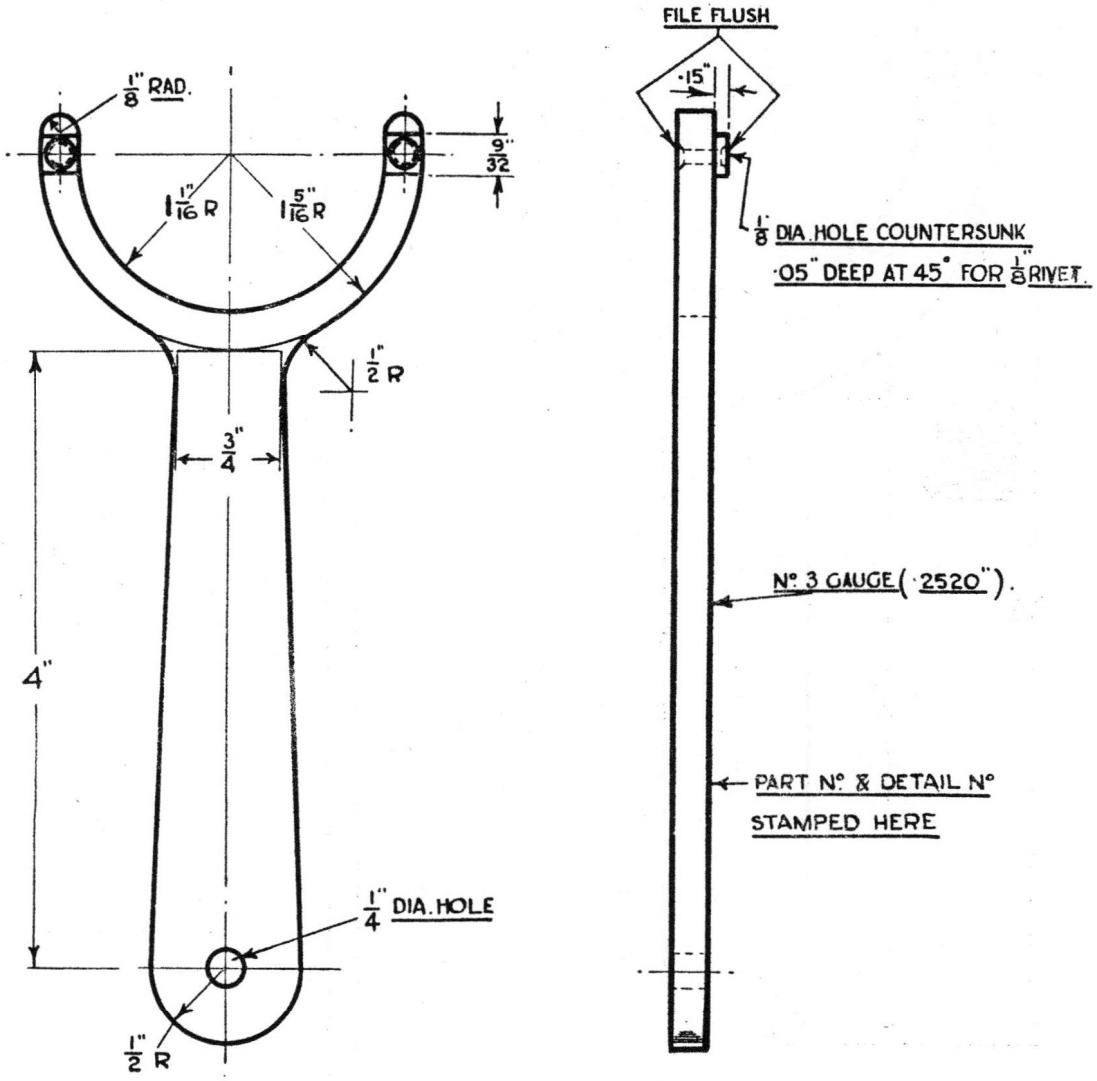

MAT'L MS – S.3

ALL SHARP EDGES TO BE REMOVED.

32	SPANNER FOR DAMPING-VALVE ASSEMBLY ST205 STORES REF. No. T27Q/6026	32

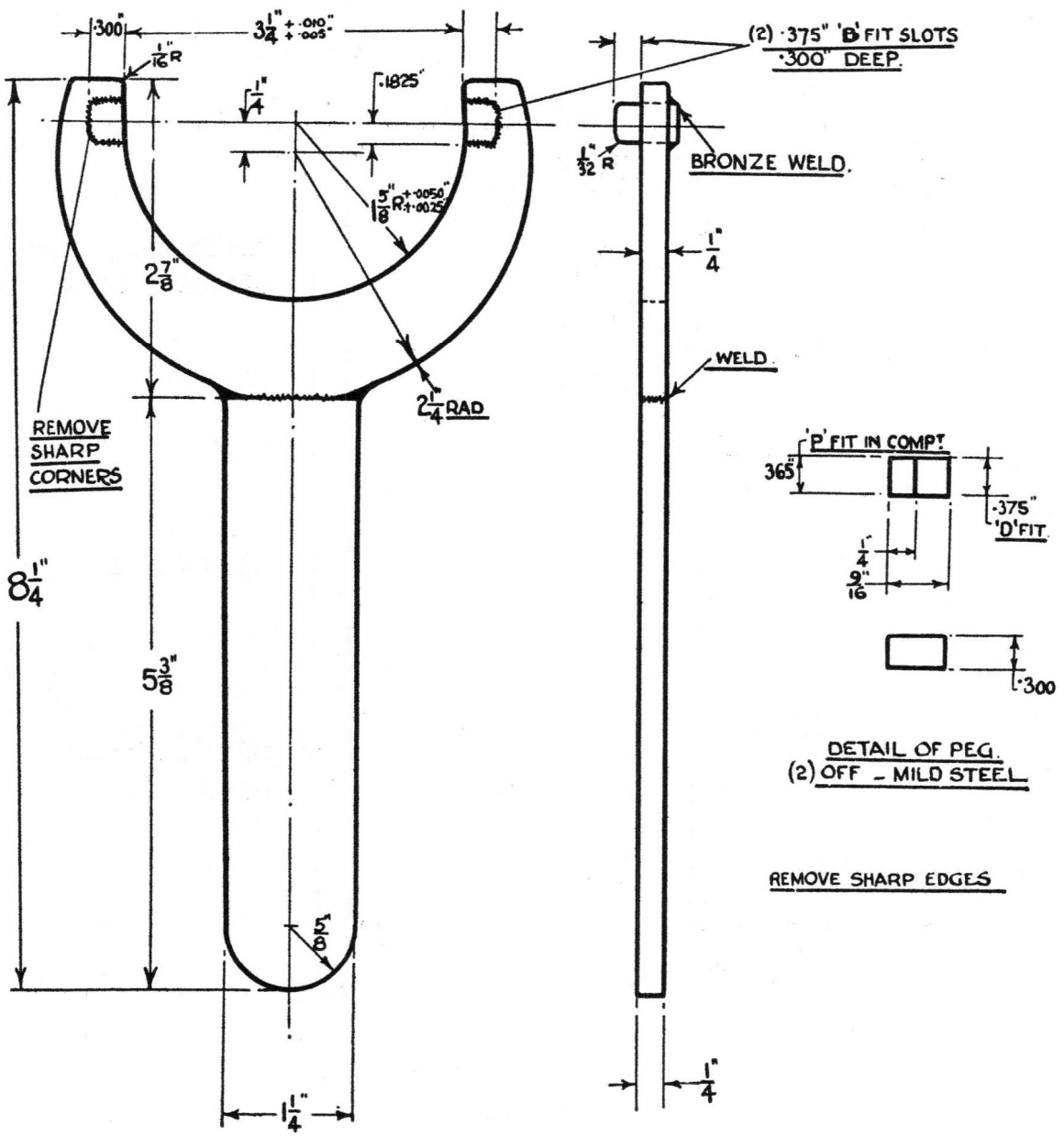

33	SPANNER FOR GLAND NUT ST699	33

STORES REF. Nº T27Q/6233

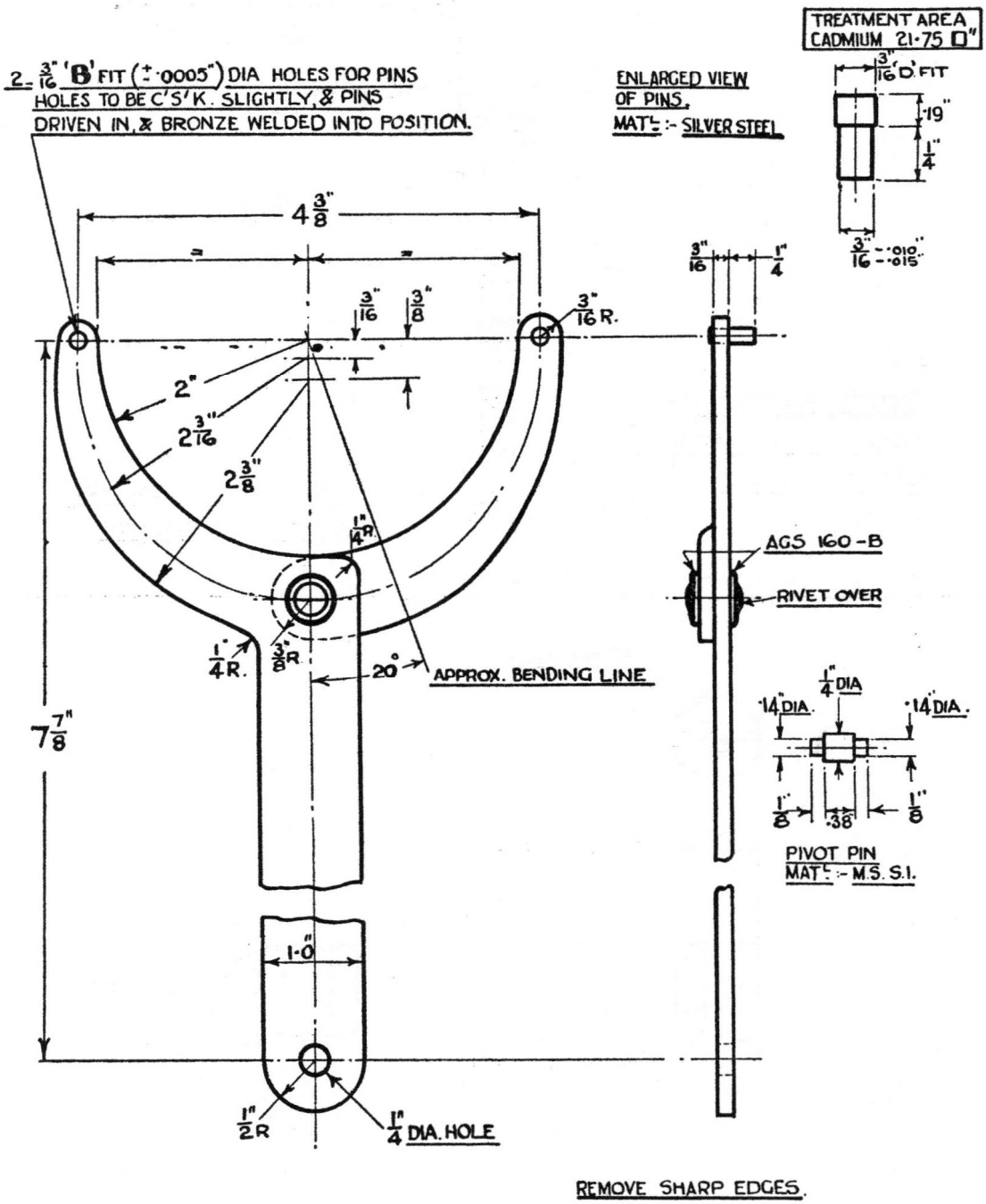

34	SPECIAL ADJUSTABLE SPANNER ST252 STORES REF. Nº T27Q/6062	34

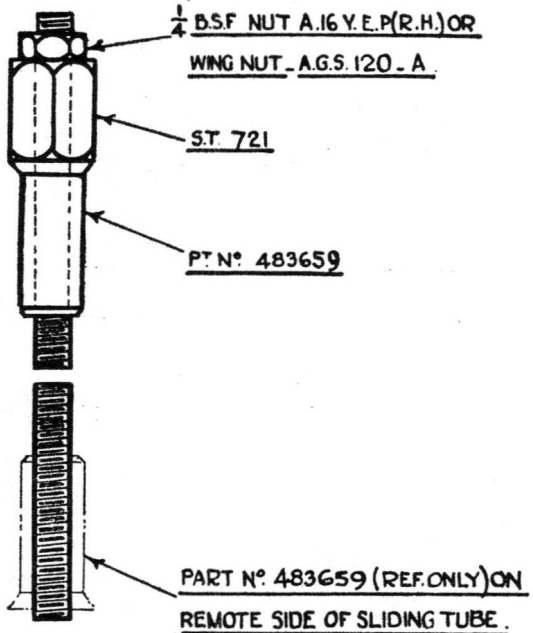

METHOD OF APPLICATION

SCREW COMPLETE ASSEM. INTO OPPOSITE FERRULE

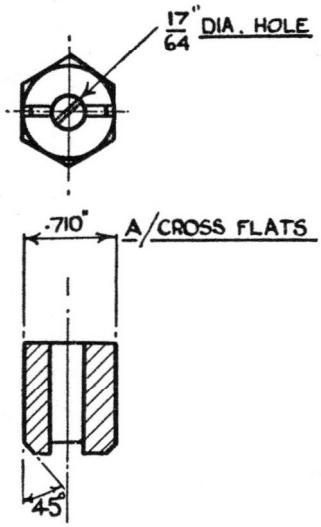

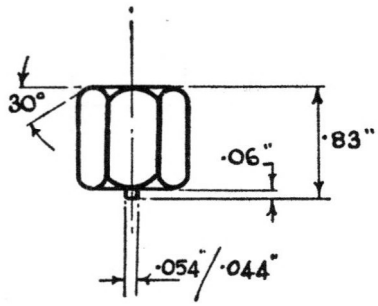

35	SCREWDRIVER FOR FERRULES ST721 STORES REF Nº T27Q/6238	35

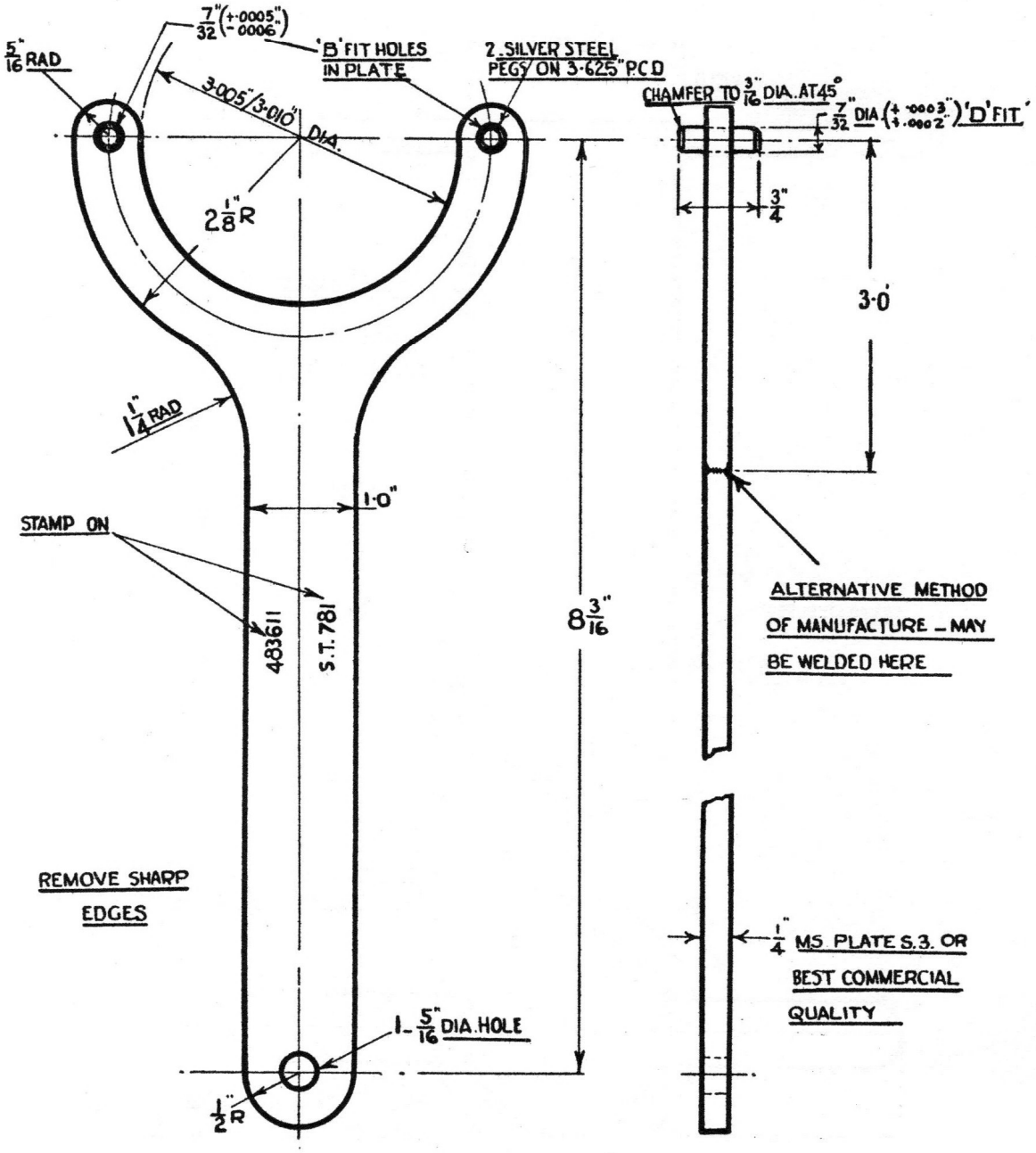

36	SPANNER FOR ASSEMBLY OF GLAND NUT TO SLIDING TUBE ST781 STORES REF Nº T27Q/6662	36

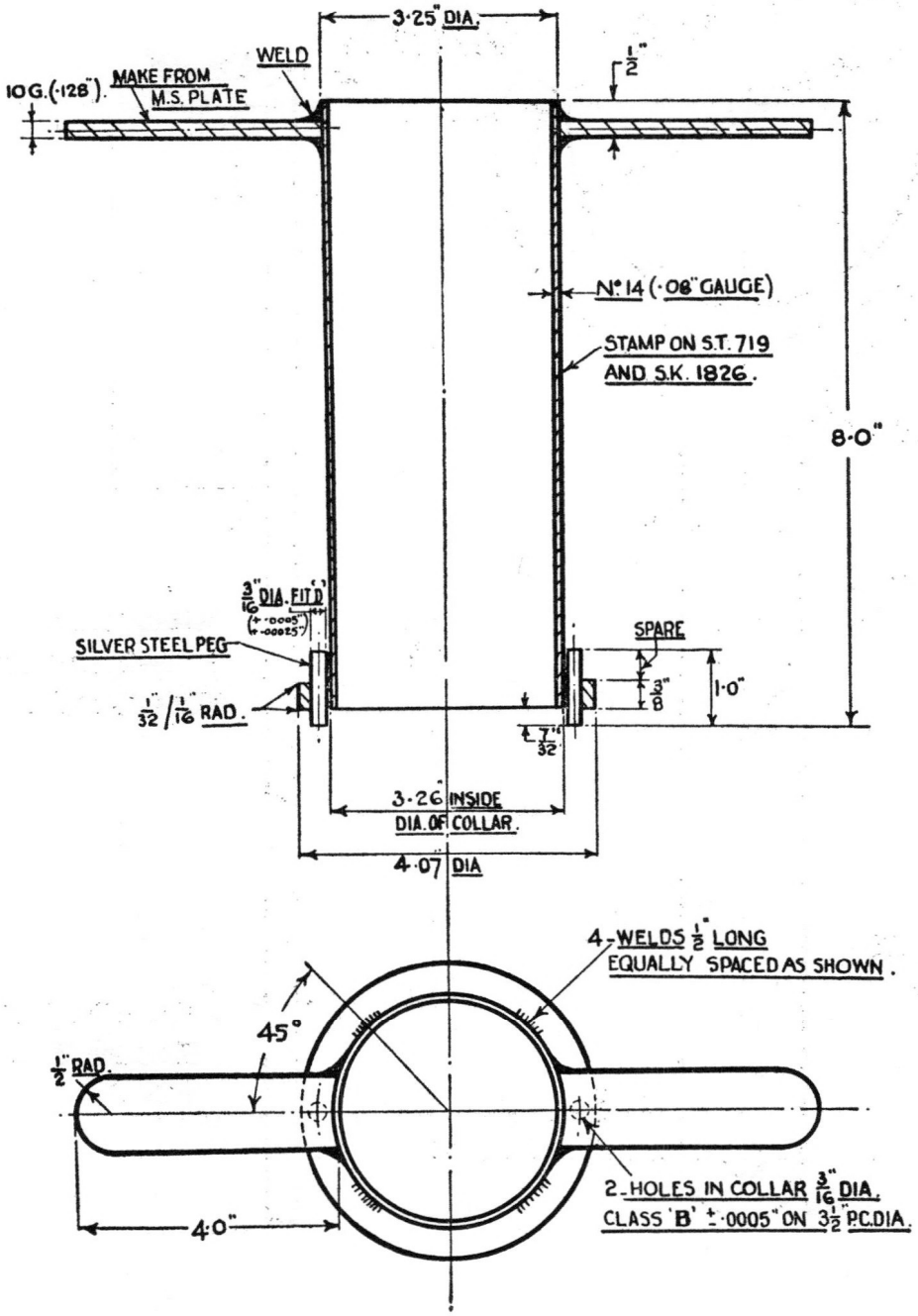

REMOVE SHARP EDGES

37	SPANNER FOR GLAND NUT ST719	37

STORES REF. Nº T27Q/6236

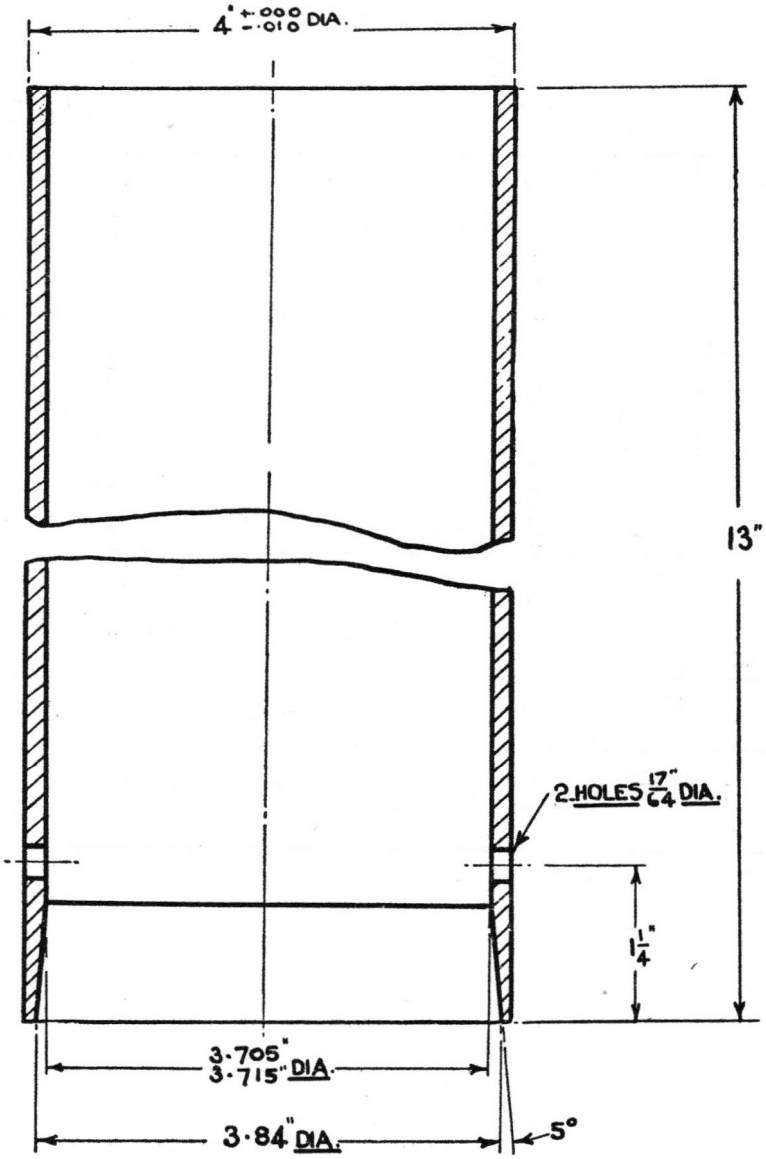

NOTE: INSIDE & OUTSIDE DIAMETERS TO BE A SMOOTH FINISH.

MATERIAL: LAMINATED SYNTHETIC RESIN.

38	PLASTIC TUBE FOR ASSEMBLY INTERNAL CYLINDER ST857 STORES REF. Nº T270/7409	38

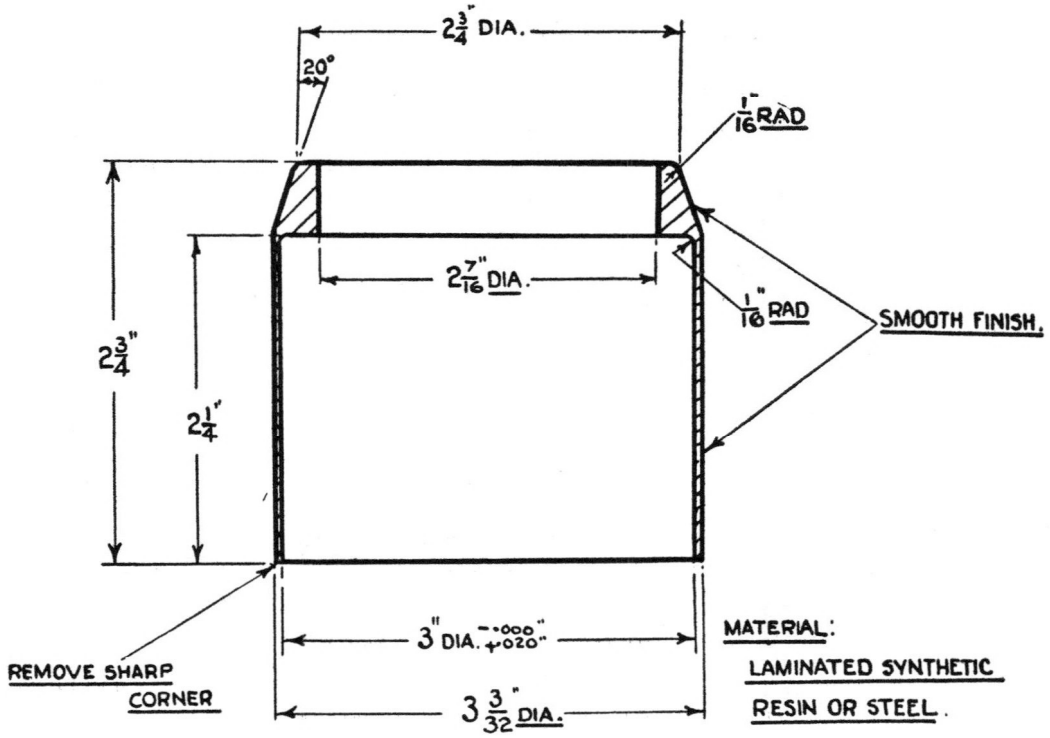

39	GUIDE SLEEVE FOR GLAND RING ST528 STORES REF. Nº T27Q/6190	39

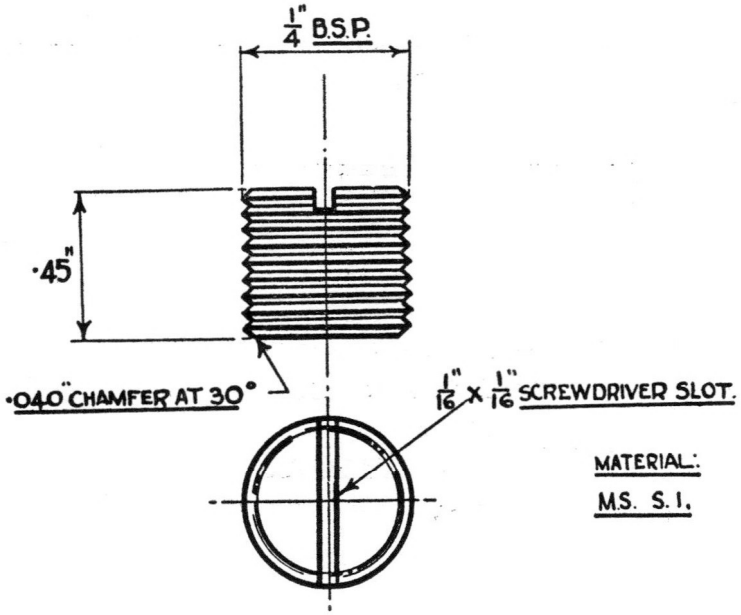

40	SEALING PLUG ST784 STORES REF. Nº T27Q/6934	40

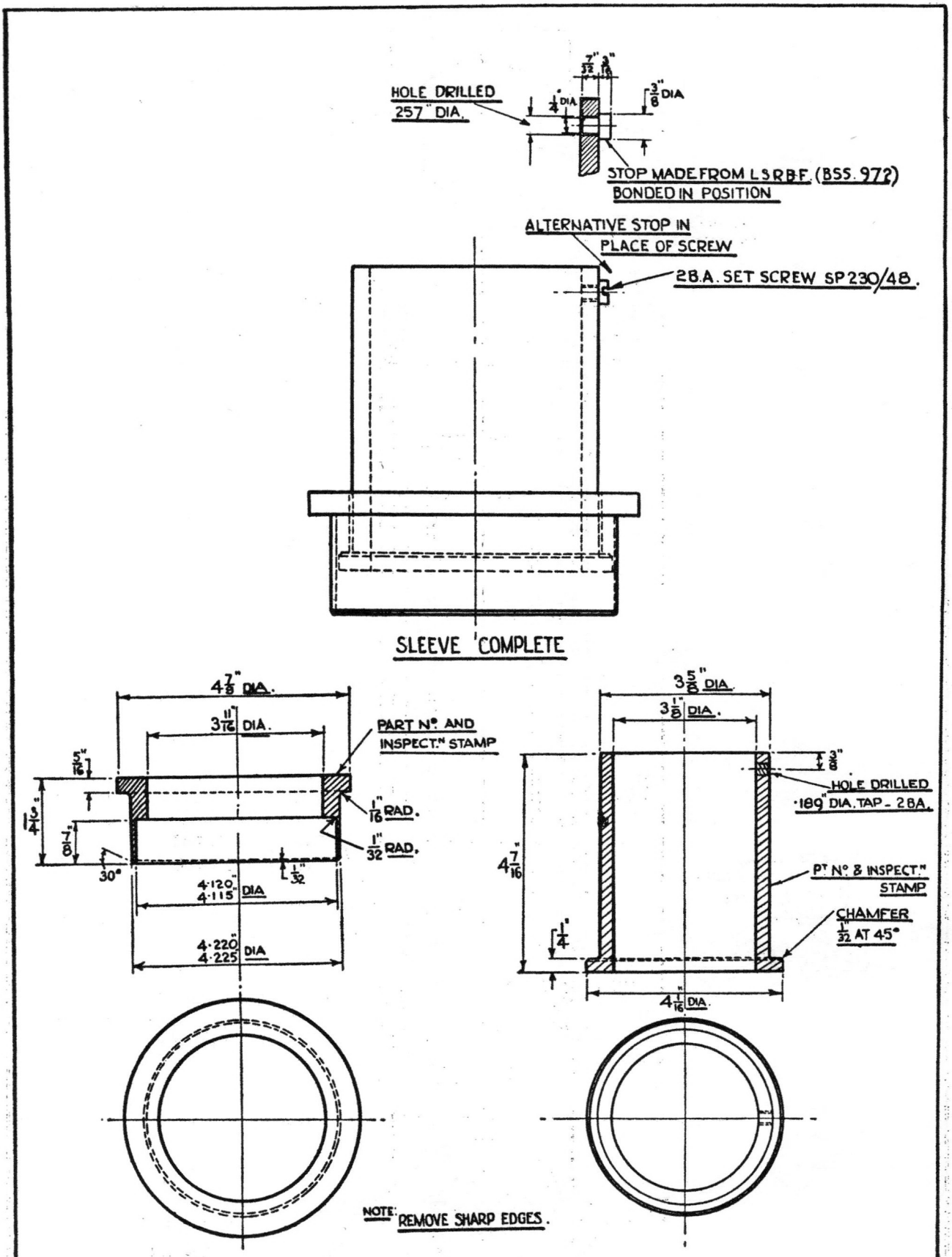

41	SLEEVE FOR ASSEMBLY OF GLAND RING INTO SLIDING TUBE ST.720 STORES REF. Nº T27Q/6237.	41

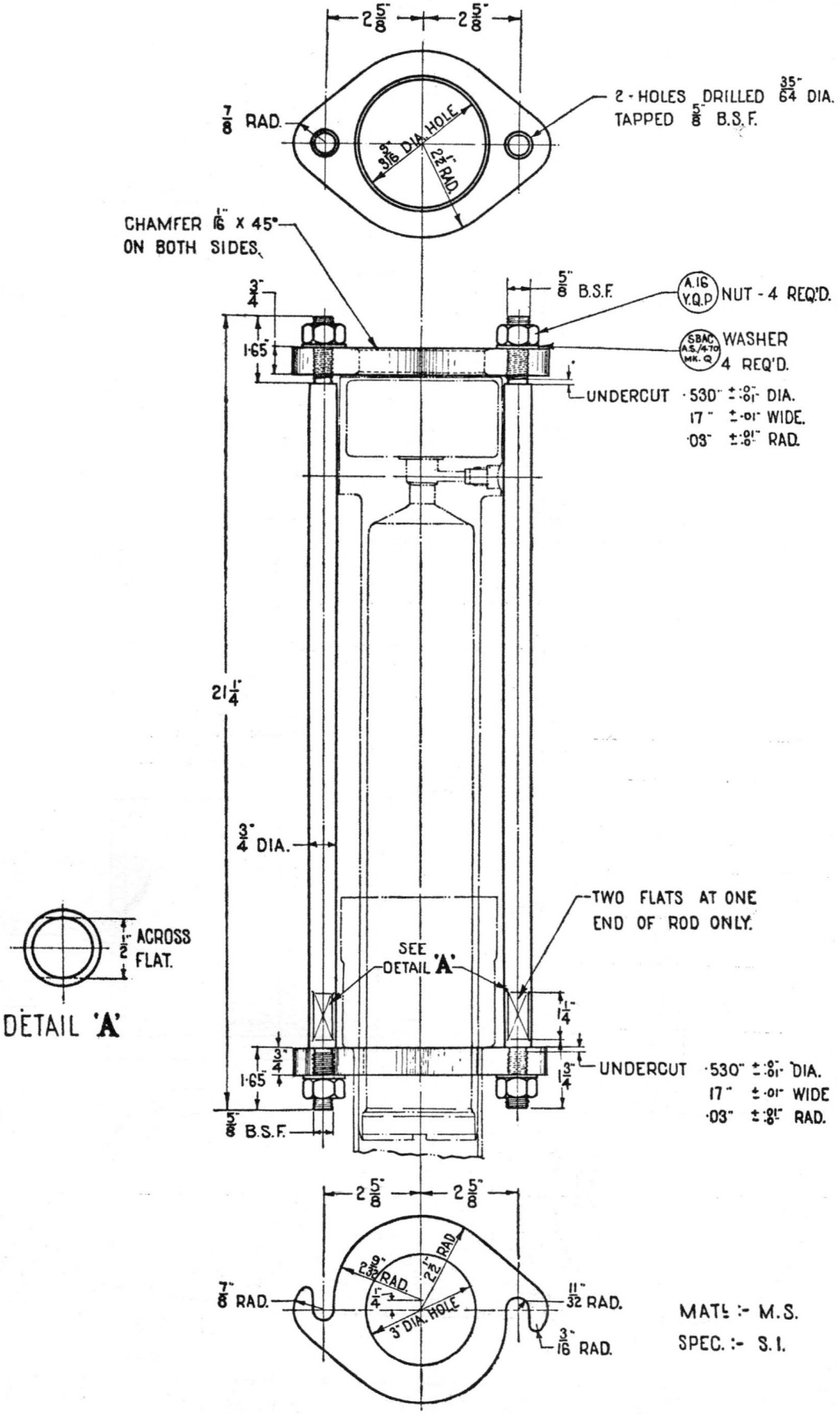

42	TEST CLAMP ST991 STORES REF. Nº T27Q/20147	42

Section 5

Removal, Assembly & Dismantling Operations

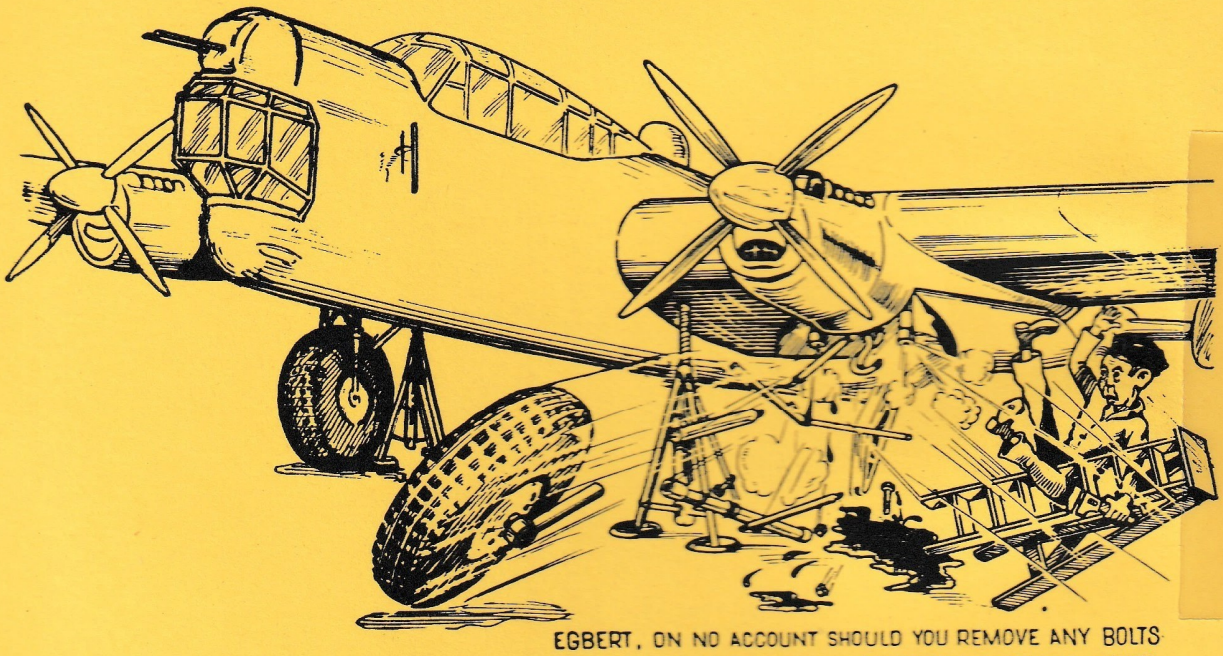

EGBERT, ON NO ACCOUNT SHOULD YOU REMOVE ANY BOLTS OR CONNECTIONS OF THE UNDERCARRIAGE OR TAIL WHEEL WITHOUT FIRST DEFLATING THE STRUTS. FAILURE TO OBSERVE THIS PRECAUTION MAY RESULT IN A SERIOUS ACCIDENT.

SECTION 5

Removal, Assembly and Dismantling Operations

CONTENTS

	Para.
INTRODUCTION	1
ASSEMBLY OF COMPLETE AIRCRAFT ...	5
DISMANTLING	7
REMOVAL NOTES —	
Pop-riveted panels	8
Trimming tab cables	9
WEATHERPROOFING	10

ILLUSTRATIONS

	Fig.
Sections of aircraft	1
Diagram of transport sections	2
Slinging and jacking sections of aircraft	3
Assembly panels	4
Weatherproofing	5
Engine and radiator cowlings	6
Erecting engine-changing gantry	7
Power plant slinging	8
Firewall details	9
Power plant	10
Outboard auxiliary gearbox...	11
Inboard gearbox and auxiliaries (1) ...	12
Inboard gearbox and auxiliaries (2) ...	13
Pulsometer pumps and fuel distributor tank	14
Inboard oil tank	15
Outboard oil tank	16
Outboard engine sub-frame...	17
Inboard engine sub-frame (1)	18
Inboard engine sub-frame (2)	19
Main wheel unit	20
Main wheel door and valance fairing ...	21
Undercarriage beams (1)	22
Undercarriage beams (2)	23

	Fig.
Ailerons (1)	24
Ailerons (2)	25
Inner and outer flaps...	26
Trailing edge — intermediate plane ...	27
Trailing edge — centre plane	28
Slinging intermediate and outer planes ...	29
Intermediate and outer plane	30
Detail of front spar joint, intermediate plane to centre plane	31
Detail of rear spar joint, intermediate plane to centre plane	32
Front and rear spar joints, outer plane to intermediate plane	33
Front spar cover	34
Fuel tanks (1)	35
Fuel tanks (2)	36
Rudder	37
Fin	38
Elevator...	39
Tail unit	40
Tail wheel strut	41
Bomb doors	42
Flap hydraulic jack	43

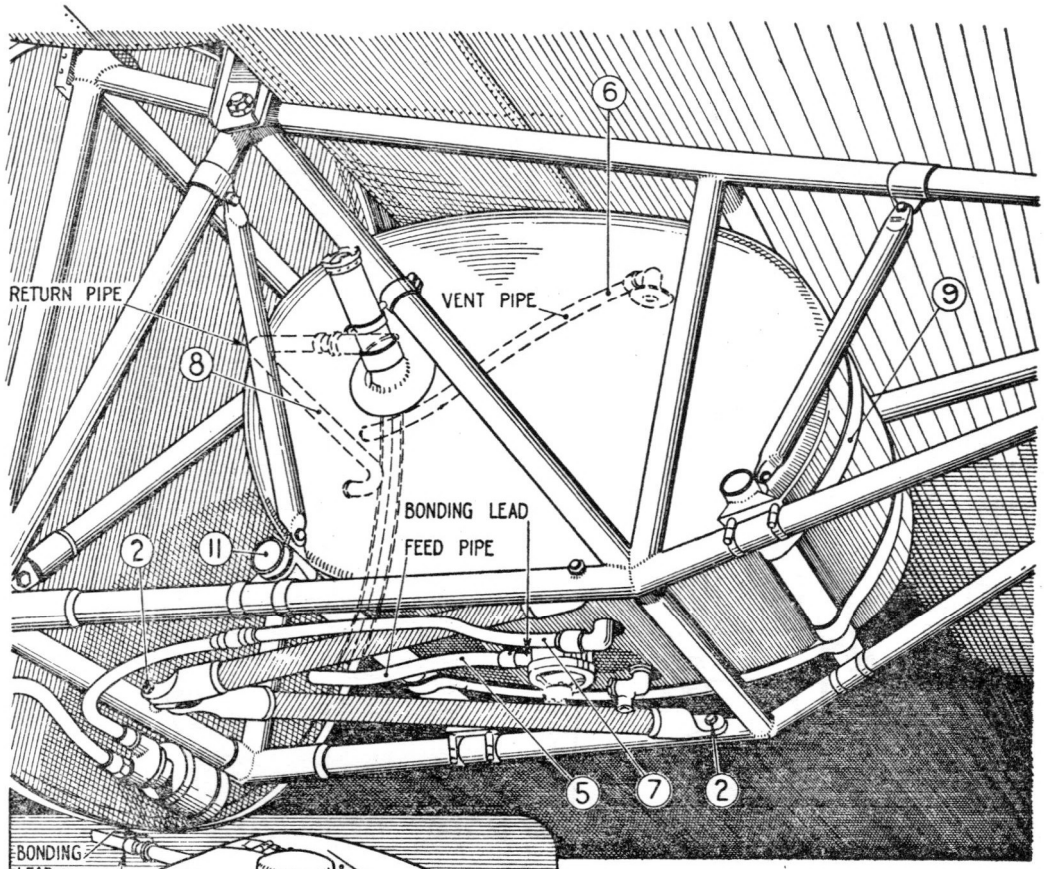

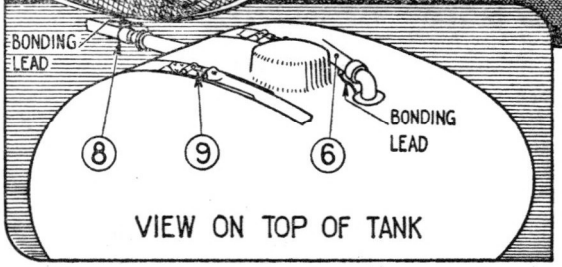

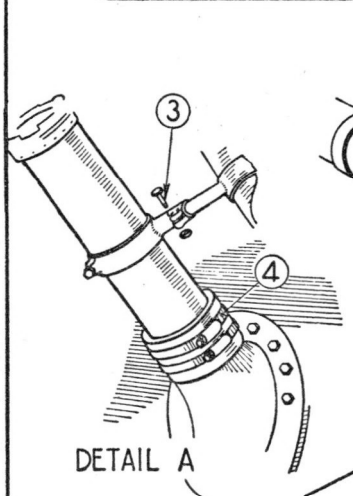

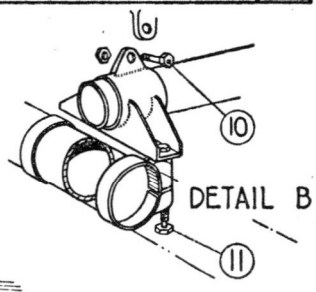

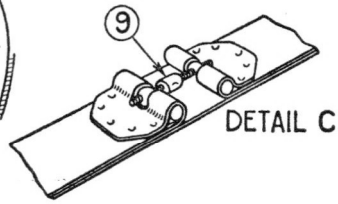

1 DRAIN THE TANK

*2 REMOVE BOLTS SECURING BRACING STRUTS SHOWN SHADED.

*3 REMOVE BOLT SECURING TANK FILLER NECK TO SUBFRAME AND REMOVE BONDING LEAD.- SEE DETAIL A

*4 REMOVE FILLER NECK BY SLACKENING OFF CLIPS AT BASE.- SEE DETAIL A

*5 DISCONNECT FEED PIPE FROM TANK.

*6 DISCONNECT VENT PIPE FROM TANK.

*7 DISCONNECT FEATHERING PIPE FROM TANK.

*8 DISCONNECT RETURN PIPE FROM TANK.

*9 DISCONNECT TANK STRAPS ON TOP OF TANK - SEE DETAIL C

*10 REMOVE BOLTS SECURING BRACING STRUTS TO TANK CROSS MEMBER - SEE DETAIL B

*11 REMOVE BOLTS SECURING CROSS MEMBER TO SUBFRAME - SEE DETAIL B

12 LOWER TANK THROUGH BOTTOM OF SUBFRAME.

SECTION 5

Removal, Assembly and Dismantling Operations

CONTENTS

	Para.
INTRODUCTION	1
ASSEMBLY OF COMPLETE AIRCRAFT ...	5
DISMANTLING	7
REMOVAL NOTES —	
Pop-riveted panels	8
Trimming tab cables	9
WEATHERPROOFING	10

ILLUSTRATIONS

	Fig.
Sections of aircraft	1
Diagram of transport sections	2
Slinging and jacking sections of aircraft	3
Assembly panels	4
Weatherproofing	5
Engine and radiator cowlings	6
Erecting engine-changing gantry	7
Power plant slinging	8
Firewall details	9
Power plant	10
Outboard auxiliary gearbox...	11
Inboard gearbox and auxiliaries (1) ...	12
Inboard gearbox and auxiliaries (2) ...	13
Pulsometer pumps and fuel distributor tank	14
Inboard oil tank	15
Outboard oil tank	16
Outboard engine sub-frame...	17
Inboard engine sub-frame (1)	18
Inboard engine sub-frame (2)	19
Main wheel unit	20
Main wheel door and valance fairing ...	21
Undercarriage beams (1)	22
Undercarriage beams (2)	23
Ailerons (1)	24
Ailerons (2)	25
Inner and outer flaps...	26
Trailing edge — intermediate plane ...	27
Trailing edge — centre plane	28
Slinging intermediate and outer planes ...	29
Intermediate and outer plane	30
Detail of front spar joint, intermediate plane to centre plane	31
Detail of rear spar joint, intermediate plane to centre plane	32
Front and rear spar joints, outer plane to intermediate plane	33
Front spar cover	34
Fuel tanks (1)	35
Fuel tanks (2)	36
Rudder	37
Fin	38
Elevator...	39
Tail unit	40
Tail wheel strut	41
Bomb doors	42
Flap hydraulic jack	43

Removal, Assembly and Dismantling Operations

Introduction

1. This Section consists mainly of illustrations which give, pictorially, a guide to the best methods of removing and assembling the principal components of the aircraft. Removal instructions only are given in most instances, as re-assembly is usually a reversal of the removal operations. Special notes on assembly are included where required, and general instructions in the following paragraphs should always be borne in mind.

2. The numerical sequence of the operations illustrated indicates the recommended order for dismantling, although in some cases it will be obvious that it is not essential to adhere rigidly to the numerical order. Key numbers that have an asterisk placed before them have a corresponding number in the relevant illustration; key numbers not having an asterisk do not have a corresponding number in the relevant illustration, and concern either items regarding which it is necessary to refer to in another part of the book (a reference being given) or items which it is not practicable to illustrate.

3. Details of bonding, locking and sealing should be carefully noted when components are dismantled, to enable them to be correctly restored on re-assembly, in addition to the operations illustrated. A description of bonding will be found in Section 6.

4. The positions of the trestles under each main component are shown in fig. 3. If the aircraft is to be jacked for assembling a minor component, the method described in Sect. 4, Chap. 3, may be used.

ASSEMBLY OF COMPLETE AIRCRAFT

5. The sequence of assembling a complete aircraft is as follows:—

(i) Undercarriage main wheel units to fuselage intermediate centre section (this includes the main plane centre section).

(ii) Fuselage nose to fuselage front centre section (these are rarely separated).

(iii) Rear fuselage, with tail wheel strut, to fuselage rear centre section.

(iv) Rear fuselage assembly to intermediate centre section.

(v) Front fuselage assembly to intermediate centre section.

(vi) Tail plane to fuselage.

(vii) Fins, rudders and elevators to tail plane.

(viii) Centre plane trailing edge portions, including flaps, to centre section.

(ix) Intermediate planes (without trailing edge) to centre plane.

(x) Intermediate plane trailing edge sections, including flaps, to intermediate planes.

(xi) Outer plane sections to intermediate planes.

(xii) Ailerons to main plane.

(xiii) Engine sub-frames and nacelle fairings to main plane.

(xiv) Power plants to engine sub-frame.

6. The main components and the transport joints are illustrated in Fig. 1, and notes on the fuselage transport joints are given on the facing page. Trestles and slings are shown in Fig. 3.

DISMANTLING

7. The complete dismantling of an aircraft for packing and transport is done in the reverse order to that given in para. 5. The packing sizes for the components are given in Fig. 2.

REMOVAL NOTES

Pop-riveted Panels

8. Pop rivets securing assembly panels must be drilled out before the panels can be removed. Drill, Pt. No. 1/Z.1473 (Stores Ref. A73/3880) should be used for this purpose; it is fitted with a screw-driver end which pre-

vents the special pop rivet from revolving with the drill. The mandrel heads should be punched out of the rivets before the latter are drilled. When replacing the assembly panels they should be riveted with the same type of rivets that were removed. Pop-riveting equipment, Pt. No. 1/Z.1474 (Stores Ref. A73/3881) is provided for this purpose. Fig. 4 shows the layout of the assembly panels and the types of rivets used.

Trimming Tab Cables

9. When disconnecting a cable, a weight should be attached to the end before releasing the cable to prevent it unwinding from the cable drum.

WEATHERPROOFING

10. It is important to ensure that all transport joints are sealed on re-assembly. For details and procedure, see Fig. 5.

KEY TO FIG. 1

(2) **Fuselage front centre section:—**

(i) Disconnect rudder and elevator push-pull rods between formers 4 and 5. This necessitates removing socket fork ends from rods.
(ii) Disconnect aileron cables between formers 5 and 6.
(iii) Disconnect all hydraulic, emergency air, vacuum and nitrogen pipes at joint nearest to front spar.
(iv) Disconnect emergency air remote control at bottle aft of front spar.
(v) Disconnect all engine controls and fuel cock tie rods at sprocket boxes on front spar and withdraw through fuselage.
(vi) Disconnect boost cut-out cables, if fitted at two turnbuckles at front spar and withdraw cables.
(vii) Disconnect cabin heating pipes at joints just outside fuselage on front spar, and at front spar in fuselage, disconnect also in bomb compartment between formers 6 and 7, starboard side, and remove pipes.
(viii) Disconnect all electrical conduits at panel on starboard side between formers 3 and 5 and where necessary withdraw through sides of fuselage.
(ix) Disconnect D.R. compass cables between stringers 2 and 3 at former 6.
(x) Disconnect all other electrical cables at nearest terminal block or junction box.
(xi) Disconnect oxygen pipes between formers 5 and 6 in bomb compartment.
(xii) Disconnect A.S.I. static line between formers 5 and 6, port and starboard sides of bomb compartment.
(xiii) Disconnect vacuum pipe to scanner in rear centre section between formers 4 and 5 in bomb compartment.
(xiv) Disconnect bomb fuzing cable under centre section floor.
(xv) Disconnect aileron trimmer cables at slide under centre-section floor in bomb curtain, starboard side.
(xvi) Disconnect bomb release cables at junction box at front end of bomb compartment, remove troughs and coil cables.
(xvii) Disconnect hydraulic pipes (flap, bomb door and jettison) between formers 5 and 6 in bomb compartment (port side).
(xviii) Disconnect rudder and elevator trimming tab cables inside rear fuselage, release fairleads and withdraw.
(xix) Disconnect glider release cable between formers D and C in bomb compartment.
(xx) Disconnect all pipes at joints on port and starboard spars outside fuselage.
(xxi) Disconnect boost pipes on spars port and starboard, and at joints inside fuselage, disconnect fairleads and withdraw pipes.
(xxii) Disconnect cabin heater by-pass from duct on front spar, starboard side.
(xxiii) Disconnect fuel cross-feed pipe at cock inside cabin, remove fairleads and withdraw pipe.
(xxiv) Remove bolts securing front centre section to centre section.

(4) **Fuselage Rear Centre Section:—**

(i) Disconnect rudder and elevator push-pull rods between formers 13 and 14 on port side of fuselage.
(ii) Disconnect aileron push-pull rods at rocking lever on rear spar.
(iii) Disconnect all electrical cables at nearest junction box or socket.
(iv) Disconnect D.R. compass cables at former 12.
(v) Disconnect all piped services between formers 11 and 13 on port side of bomb compartment.
(vi) Disconnect turret heater pipes between formers 13 and 14, starboard side of bomb compartment.
(vii) Disconnect ground starter cables between formers 17 and 18, starboard side of bomb compartment, and withdraw through fairleads.
(viii) Disconnect A.S.I. static vent pipe between formers 11 and 12 on starboard side of bomb compartment.
(ix) Disconnect bomb release cables at junction box at front end of bomb compartment, remove troughs and coil cables.
(x) Disconnect vacuum pipe between formers 11 and 12 on starboard side of bomb compartment.
(xi) Remove bolts securing rear centre section to centre section.

(5) **Fuselage Rear Section:—**

(i) Disconnect ammunition tracks at former 28.
(ii) Disconnect trimming tab cables opposite fuselage and withdraw through fairleads.
(iii) Disconnect rudder and elevator push-pull rods between formers 27 and 28.
(iv) Remove handrail clip at former 27.
(v) Disconect intercommunication and fuselage lighting cables at terminal block between formers 27 and 28.
(vi) Disconnect electrical cables at junction box between formers 41 and 42, remove clips and coil cables.
(vii) Disconnect dinghy release.
(viii) Disconnect turret heater pipe.
(ix) Remove angle brackets between stringers 10 and 12 at former 27.
(x) Remove bolts securing rear fuselage to rear centre section.

TO REMOVE	SEE
1. FUSELAGE NOSE	
2. FUSELAGE FRONT CENTRE SECTION	KEY TO FIG. 1.
3. CENTRE SECTION FUSELAGE AND MAIN PLANE	
4. FUSELAGE REAR CENTRE SECTION	KEY TO FIG. 1.
5. FUSELAGE REAR SECTION	KEY TO FIG. 1
6. NOSE GUN TURRET	SECT 12
7. DORSAL GUN TURRET (NOT SHOWN)	SECT 12
8. TAIL GUN TURRET	SECT. 12
9. BOMB DOORS	FIG. 42
10. POWER PLANTS	FIG 10
11. ENGINE SUB-FRAMES INBOARD	FIG 18 & 19

TO REMOVE :-	SEE
12. UNDERCARRIAGE BEAMS	FIG. 22 & 23
13. MAIN WHEEL DOORS AND VALANCES	FIG. 21
14. MAIN WHEEL UNITS	FIG. 20
15. FLAPS - INBOARD	FIG. 26
16. TRAILING EDGE - CENTRE SECTION	FIG. 28
17. ENGINE SUB-FRAMES OUTBOARD.	FIG. 17
18. TRAILING EDGE - INTERMEDIATE PLANE	FIG. 27
19. FLAPS - OUTBOARD	FIG. 26
20. INTERMEDIATE PLANES	FIG. 30
21. AILERONS	FIG. 24 & 25
22. OUTER PLANES	FIG. 30

TO REMOVE	SEE
23 ELEVATORS	FIG. 39
24 RUDDERS	FIG. 37
25. FINS	FIG. 38
26. TAIL PLANE	FIG. 40
27. TAIL WHEEL	FIG. 41

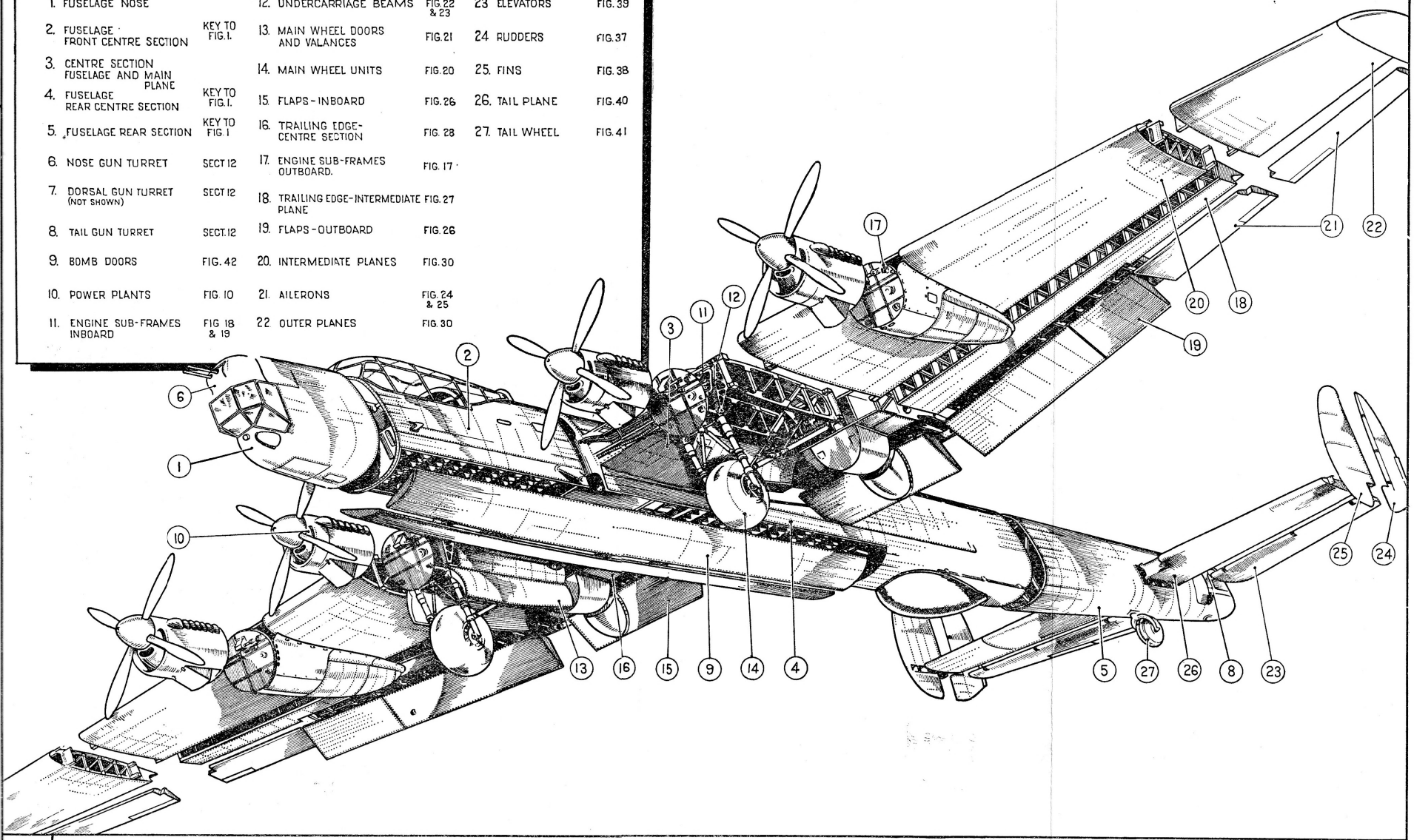

SECTIONS OF AIRCRAFT

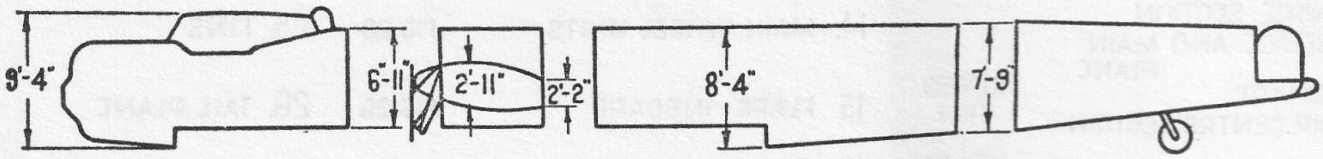

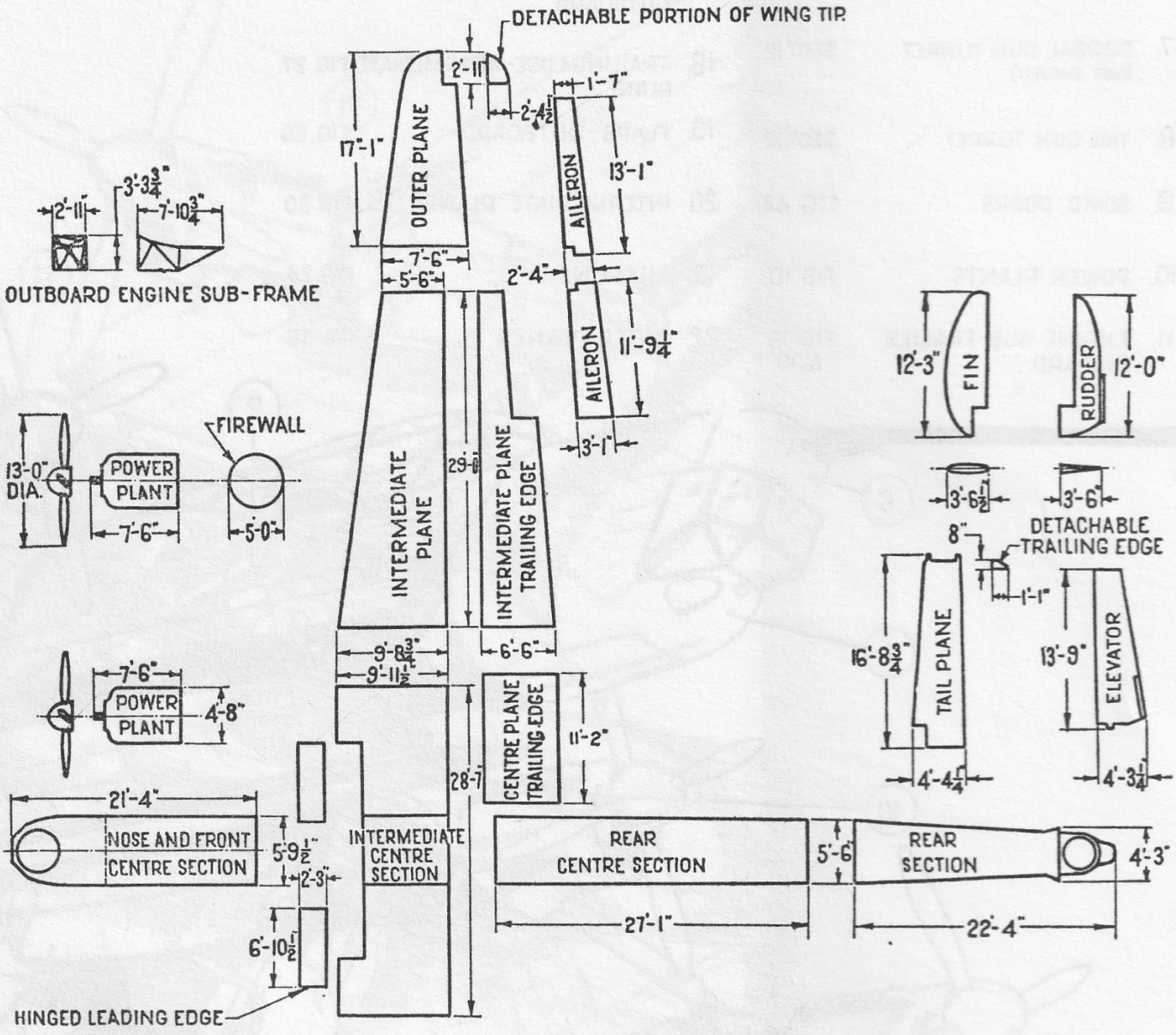

DIAGRAM OF TRANSPORT SECTIONS

NOSE & FRONT CENTRE SECTION

INTERMEDIATE CENTRE SECTION

REAR CENTRE SECTION

REAR SECTION

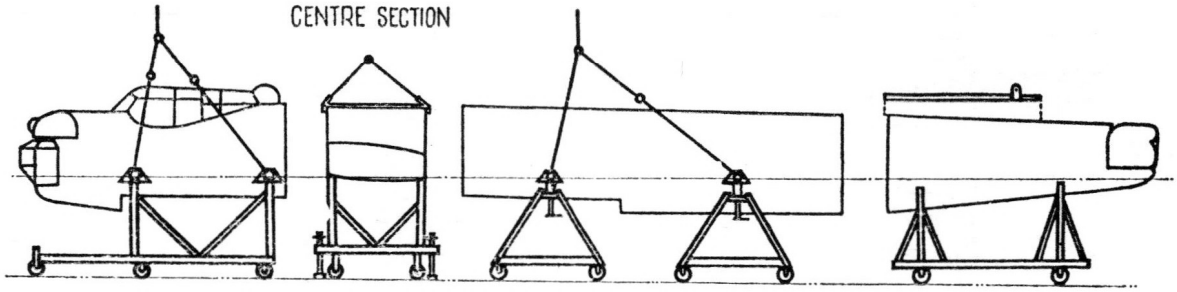

SLING
PART Nº 1/U792

JACKING TROLLEY
PART Nº P2001

SLING
PART Nº 1/U742

JACKING TROLLEY
PART Nº P2005

SLING
PART Nº 1/U790

FRONT JACKING TROLLEY
PART Nº P.2004

REAR JACKING TROLLEY
PART Nº P2004.

SLING
PART Nº 1/U791

JACKING TROLLEY
PART Nº P2003

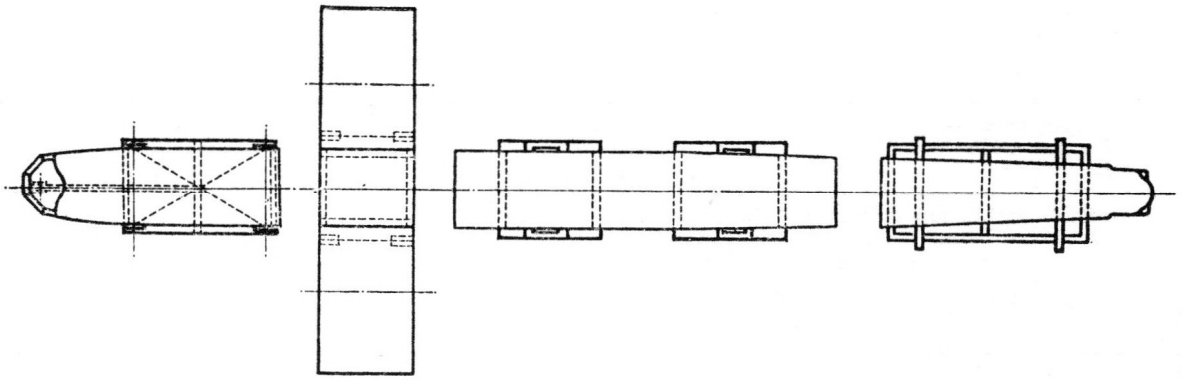

OUTER PLANE

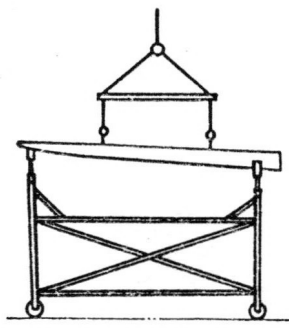

SLING
PART Nº 2/U760

JACKING TROLLEY
PART Nº P.3033

INTERMEDIATE PLANE

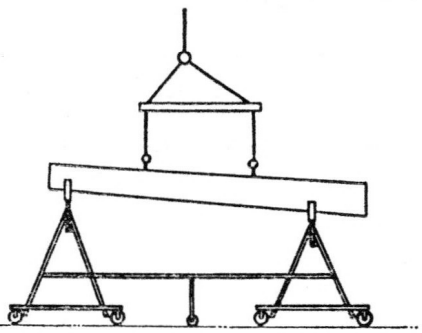

SLING
PART Nº 1/U760

JACKING TROLLEY
PART Nº P.2047.

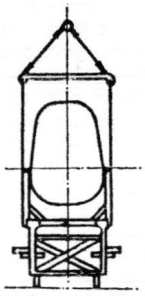

TYPICAL FRAME & SLING MOUNTED ON TROLLEY

NOTE :- THE JACKING & SLINGING SHOWN ON THIS ILLUSTRATION IS ONLY TO BE USED FOR SUPPORTING THE SECTIONS AND DURING ASSEMBLY .

THE PART Nºs QUOTED ABOVE. FOR JACKING TROLLEYS, ARE DEPARTMENT OF AIRCRAFT PRODUCTION DRG. Nºs

3	SLINGING & JACKING SECTIONS OF AIRCRAFT	3

KEY TO FIG. 4

Item	Description	Access	Screws	Rivets	Bolts
1	Assembly panel —				
	Excluding corners: Forward edge	No. 1 fuel tank	231/D.2902		
	Excluding corners: Aft edge		230/D.2902		
	Excluding corners: Inboard edge		1/S.S.3753		
	Excluding corners: Outboard edge		1/S.S.3754		
	Corners: Forward inboard — Front		36/D.4205 (8 off)		
	Corners: Forward inboard — Side		36/D.4205 (8 off)		
	Corners: Forward outboard — Front		36/D.4205 (8 off)		
	Corners: Forward outboard — Side		35/D.4205 (8 off)		
	Corners: Aft inboard — Rear		36/D.4205 (8 off)		
	Corners: Aft inboard — Side		36/D.4205 (7 off)		
	Corners: Aft outboard — Rear (nearest to corner)		35/D.4205 (3 off)		
	Corners: Aft outboard — Rear (remainder)		36/D.4205 (5 off)		
	Corners: Aft outboard — Side		35/D.4205 (7 off)		
	Fit screws in panel until $\frac{1}{4}$ in.—$\frac{3}{8}$ in. proud, apply **Duralac** to exposed shanks and underside of heads, and tighten.				
2	Covers, top and bottom surface	Centre — intermediate plane joint	5/S.S.3158		
3	Covers —	Intermediate — outer plane joint			
	Top surface			7/S.S.3123	A.S.1885/1.C
	Bottom surface				
4	Assembly panel —	Engine controls			
	Forward edge			7/S.S.3123	
	Remainder			6/S.S.3123	
5	Assembly panels, top surface —	No. 2 and 3 fuel tanks			
	Panels to frames				A.S.1882/3.E
	At each corner except where otherwise indicated				A.S.1882/4.3 (4 off)
6	At corner indicated				A.S.1882/4.3 (8 off)
7	Assembly panels	Trailing edge intermediate plane joint		11/S.S.3123	
8	Access doors	Formation lamp terminals and tip assembly joint	4/S.S.3158		
9	Access panel —	Centre plane — trailing edge joint			
	Except in transport spar		4/S.S.3158		
	In transport spar		5/S.S.3158		
10	Assembly panels —	Transport joint bolts			
	In cover, skin and intercostal			10/S.S.3222	
11	Panel and floor skin			9/S.S.3222	
12	Attachment strip and panel			13/S.S.3222	
13	Intercostal, floor skin and panel			10/S.S.3222	
14	Floor skin and panel			9/S.S.3222	
15	Assembly panels, top skin	Control joints	2/S.S.2590		
16	Assembly panel —	Fin — tail plane joint			
	Panel to ribs			10/S.S.3222	
	Panel to front fin post			11/S.S.3222	
	Panel to rear fin post		A.S./159/408		
17	Assembly panel	Rudder control lever		10/S.S.3222	
18	Panels, except where otherwise indicated	Tail plane — fuselage joint	26/S.S.2590		

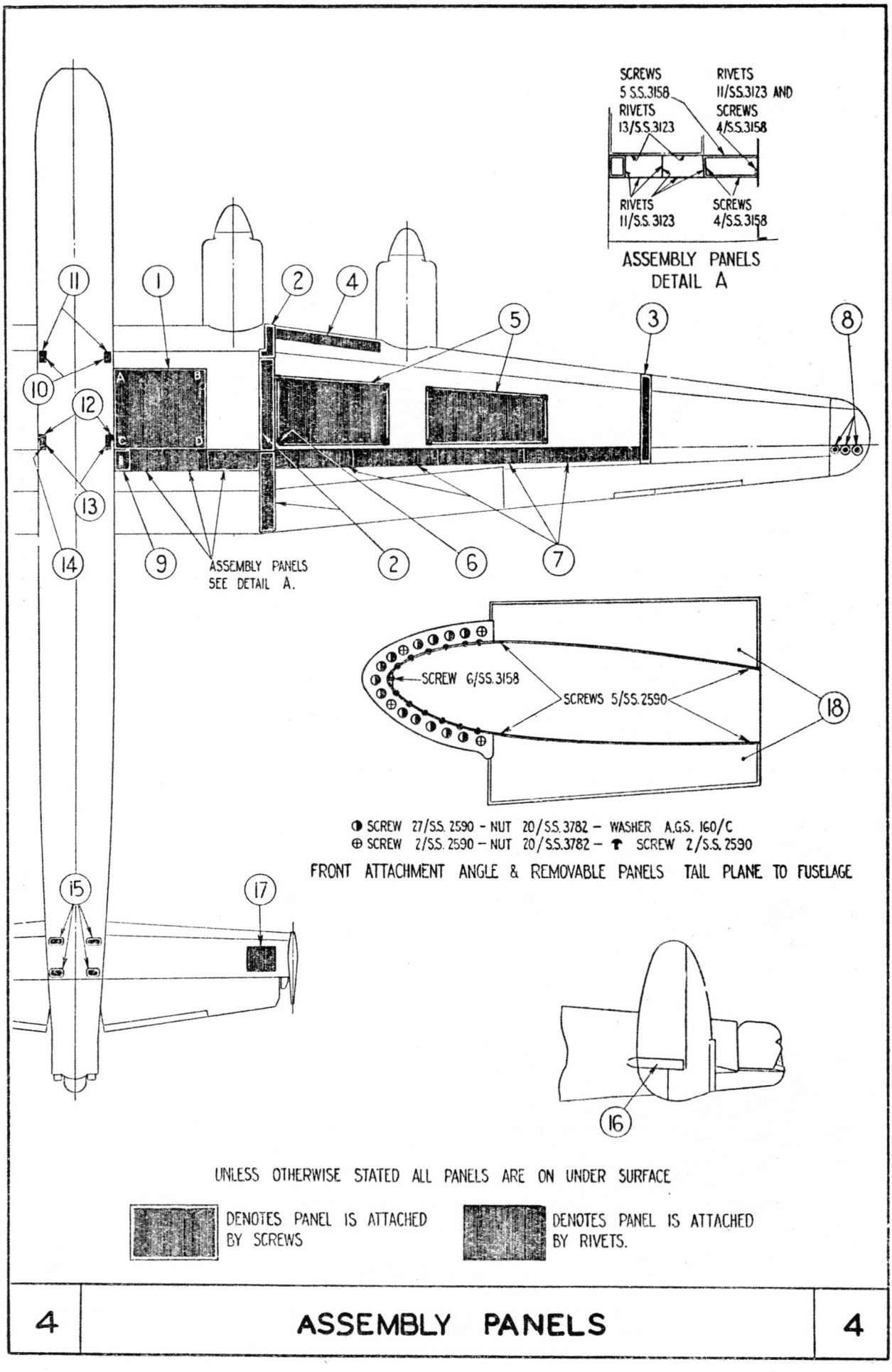

4	ASSEMBLY PANELS	4

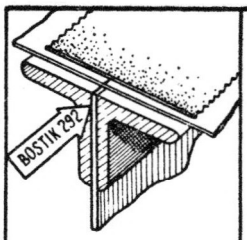

DETAIL A

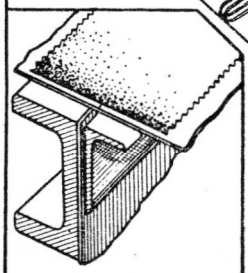

DETAIL B

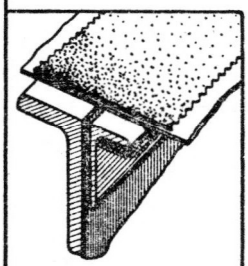

DETAIL C

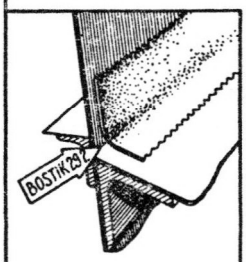

DETAIL D

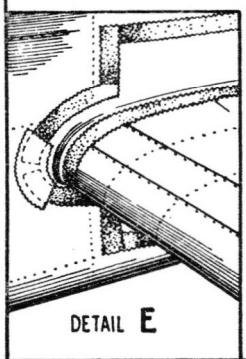

DETAIL E

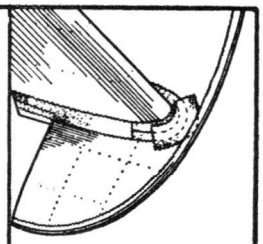

DETAIL F

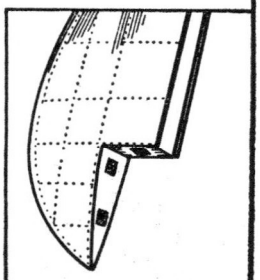

DETAIL G

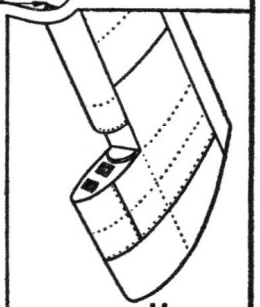

DETAIL H

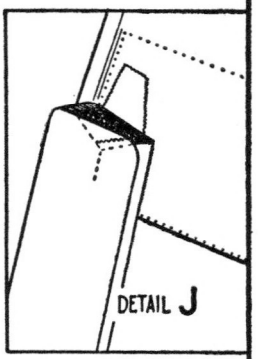

DETAIL J

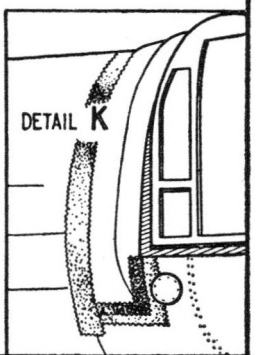

DETAIL K

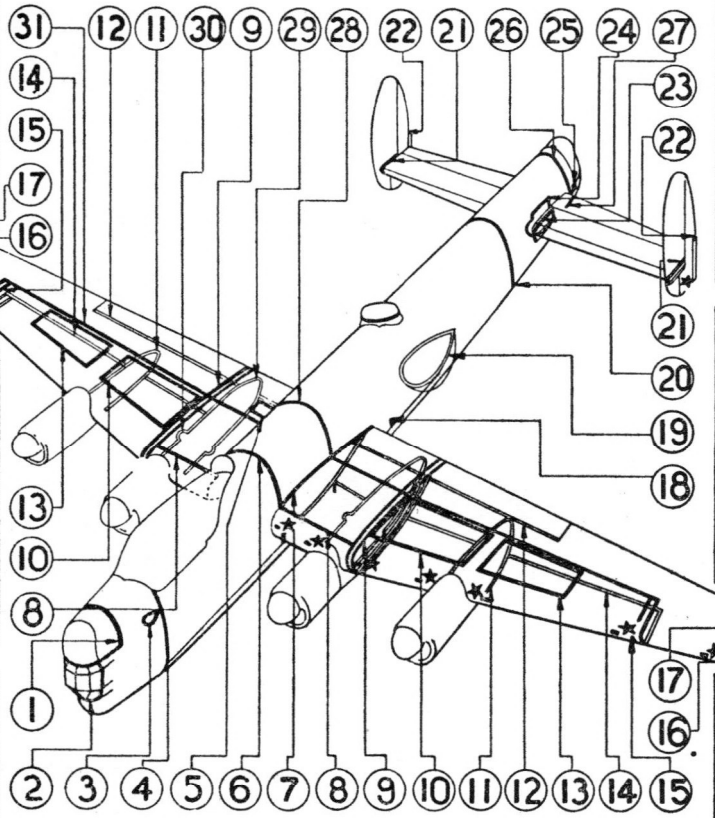

1. 3" TAPE ROUND TURRET DRAUGHTSCREEN
2. 3" TAPE AT AIR BOMBER'S WINDOW.
3. FABRIC PATCH ROUND AERIAL.
4. 4" TAPE ROUND TRANSPORT JOINT AT FORMER E. INSERT A BEAD OF BOSTIK 292 BEFORE BOLTING UP. SEE DETAIL A
5. 3" TAPE ROUND DINGHY STOWAGE COVER.
6. 4" TAPE ROUND TRANSPORT JOINT AT FORMER 6. INSERT A BEAD OF BOSTIK 292 BEFORE BOLTING UP. SEE DETAIL A
7. 4" TAPE AT WING ROOT. INSERT A BEAD OF BOSTIX 292 BEFORE TAPING. SEE DETAIL D
8. 5" TAPE OVER JOINT AT FRONT SPAR CUT TAPE AT END OF HINGED LEADING EDGE.
9. TAPES ROUND WING GAP FAIRING. 3" TAPES ON TOP TO FRONT SPAR. 4" TAPES OVER NOSE AND UNDERSIDE.
10. 5" TAPES AT Nº 2 TANK ACCESS PANEL
11. 4" TAPES ROUND OUTBOARD NACELLE.
12. 5" TAPES OVER FLAP HINGE.
13. 4" TAPES AT Nº 3 TANK ACCESS PANEL.
14. 4" TAPES AT UNDERSIDE OF REAR SPAR SEE DETAIL B. FOR INNER SECTION SEE DETAIL C FOR OUTER SECTION.
15. 4" TAPES OVER OUTER PLANE JOINT FAIRING.
16. 2" TAPE AT NAVIGATION LAMP WINDOW.
17. 3" TAPE ROUND FORMATION-KEEPING LAMPS.
18. 3" TAPES ON BOMB DOOR CURTAIN JOINTS.
19. 3" TAPE ROUND SCANNER UNIT FAIRING.
20. 4" TAPE ROUND TRANSPORT JOINT AT FORMER 27. INSERT A BEAD OF BOSTIK 292 BEFORE BOLTING UP SEE DETAIL A
21. JOINT TAIL PLANE TO FIN. 4" TAPE FROM FRONT TO REAR SPAR TOP AND BOTTOM. DOUBLE 3" TAPES OVER LEADING EDGE AND FABRIC PATCH AT FRONT SEE DETAIL F
22. SPECIAL PATCHES OVER TOOLING HOLES SEE DETAIL J
23. 4" TAPE ROUND TAILPLANE ROOT FAIRING INSERT BEAD OF BOSTIK 292 BEFORE TAPING. SEE DETAIL E
24. 4" TAPE ON FUSELAGE ROUND TAILPLANE ROOT FAIRING FABRIC PATCH AT FRONT SEE DETAIL E
25. 5" TAPE AT BASE OF TURRET DEFLECTOR SEE DETAIL K
26. 5" TAPE ROUND JOINT AT TURRET DEFLECTOR AND FUSELAGE SEE DETAIL K
27. FABRIC PATCH FOR GLIDER TOWING RELEASE UNIT ATTACHMENT JOINT.
28. 4" TAPE AT TRANSPORT JOINT FORMER 12 SEE DETAIL A
29. 4" TAPE ROUND INBOARD NACELLE VALANCE
30. FABRIC PATCH 3" WIDE ROUND BLISTER BOTH SIDES OF INBOARD NACELLES.
31. 4" TAPE OVER REAR SPAR. SEE DETAIL B FOR CENTRE SECTION. SEE DETAIL C FOR OUTER SECTION.

ALL EXTERIOR WIRELESS LEAD IN INSULATORS USE BOSTIK 292 AS A JOINT, BETWEEN THE INSULATOR AND THE FUSELAGE SKIN.

★ FABRIC PATCHES $5\frac{1}{2}$" X $4\frac{1}{2}$" OVER BBP APERTURES ALSO PATCHES OVER TOOLING HOLES. SEE DETAILS G AND H.

NOTE:- ALL TAPES AND PATCHES TO HAVE SERRATED EDGES.

METHOD OF TAPING :- TO BE ATTACHED WITH CELLULOSE FABRIC CEMENT AND TO BE COATED WITH ALUMINIUM PAINT ON UNCAMOUFLAGED AIRCRAFT.

MATERIAL OF FABRIC OR TAPE :- LINEN OR COTTON (MADAPOLLAM)

SPEC. OF TAPE:- D.T.D. 624, 596, 540, 343, 407, AND F.1, F.8, AND (E)D. 861.

WEATHERPROOFING

COWLINGS FORWARD OF COWLING RING

TO DISENGAGE COWLINGS RELEASE DZUS FASTENERS. ON PANELS MARKED 2 ALSO INSERT HOOK ON TOP RUNG OF SERVICE LADDER AT A AND PUSH UP TO RELEASE LOCKING CATCH. PANELS MARKED 1 AND 2 ARE HINGED AND NOT NORMALLY REMOVED. THESE PANELS MUST BE SWUNG OPEN BEFORE EXHAUST PANEL MARKED 3 CAN BE REMOVED.

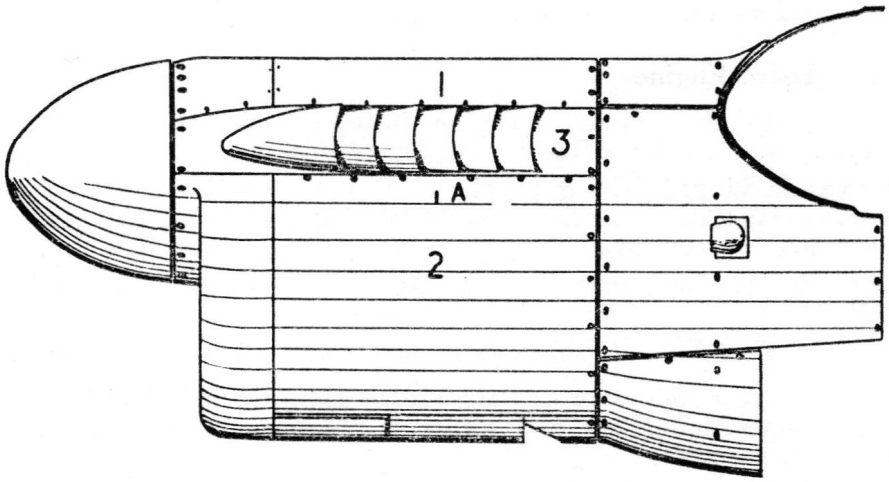

INBOARD ENGINE

FAIRINGS AFT OF COWLING RING

THESE ARE DISENGAGED BY RELEASING THE DZUS FASTENERS AND MAY BE REMOVED IN ANY ORDER.

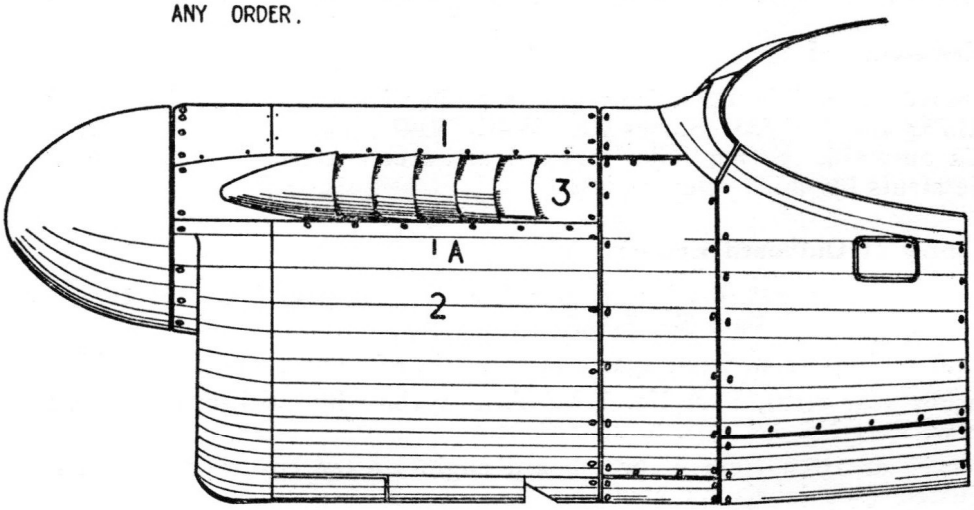

OUTBOARD ENGINE

6	ENGINE & RADIATOR COWLINGS	6

KEY TO FIG. 7

General Note

The power plant-changing gantry, Part No. 1/U.746 (Stores Ref. W4G/25047), is provided for use when a crane is not available. The aircraft must be in the tail down position. The rear cowling panels must first be removed and a wooden platform, Part No. 1/U.743 (Stores Ref. W4G/25048), placed in position. The instructions on the labels on the gantry component parts, as well as those given below, must be carefully followed.

Erecting Gantry at Inboard Engine

(1) Remove two plugs from holes in engine rib top booms just forward of rear spar and screw in eyebolts, Part No. 2/U.746.

(2) Through holes in hinged fairing panel (which need not be lifted) remove plugs from top of undercarriage support beams and fit two ball socket brackets, Part No. 11/U.634, using bolts, Part No. 6A1/8L.

(3) Attach rear side members, Part No. 1/U.749, to eyebolts and to operating screw, Part No. 1/U.735.

Note.—Top joint, Part No. 1/U.646, is permanently attached to operating screw.

(4) Fit ball ends of rear side struts, Parts Nos. 1/U.750 and 2/U.750, in ball socket brackets, raise operating screw and secure side struts at top joint. Screw down caps on to ball socket brackets.

(5) Assemble hook, Part No. 6/U.634, link pin, Part No. 7/U.634, and reversible nuts, Part No. 8/U.634, to links, Part No. 3/U.634, and attach links to forward end of top strut, Part No. 1/U.648.

Note.—The recessed ends of the reversible nuts should be on the inner side.

(6) Attach front side struts, Parts Nos. 1/U.751 and 2/U.751, to forward end of top strut.

(7) Place ball ends of front side struts in sockets on rear side struts, and screw down caps.

(8) Raise top strut and secure at top joint with quick-release pin.

For Propeller Removal

(9) Remove reversible nuts from pin securing hook, fit extension members, Parts Nos. 1/U.752 and 1/U.753 (Stores Ref. W4G/25049), to pin and replace nuts, turning recessed ends outward. Swing links forward and attach extension members to sleeves on front side struts by quick-release pins.

Erecting Gantry at Outboard Engine

(10) Remove plug forward of rear spar from hole in top boom of centre engine rib and screw in eyebolt, Part No. 3/U.746.

(11) Remove plugs from front spar and screw in two ball sockets, Part No. 10/U.634.

(12) Anchor rear strut, Part No. 1/U.747, at eyebolt by quick-release pin, and fit operating screw, Part No. 1/U.735, to rear strut.

(13) Proceed as from Item 4 for inboard engine, after ensuring that struts are correctly adjusted (see labels on struts).

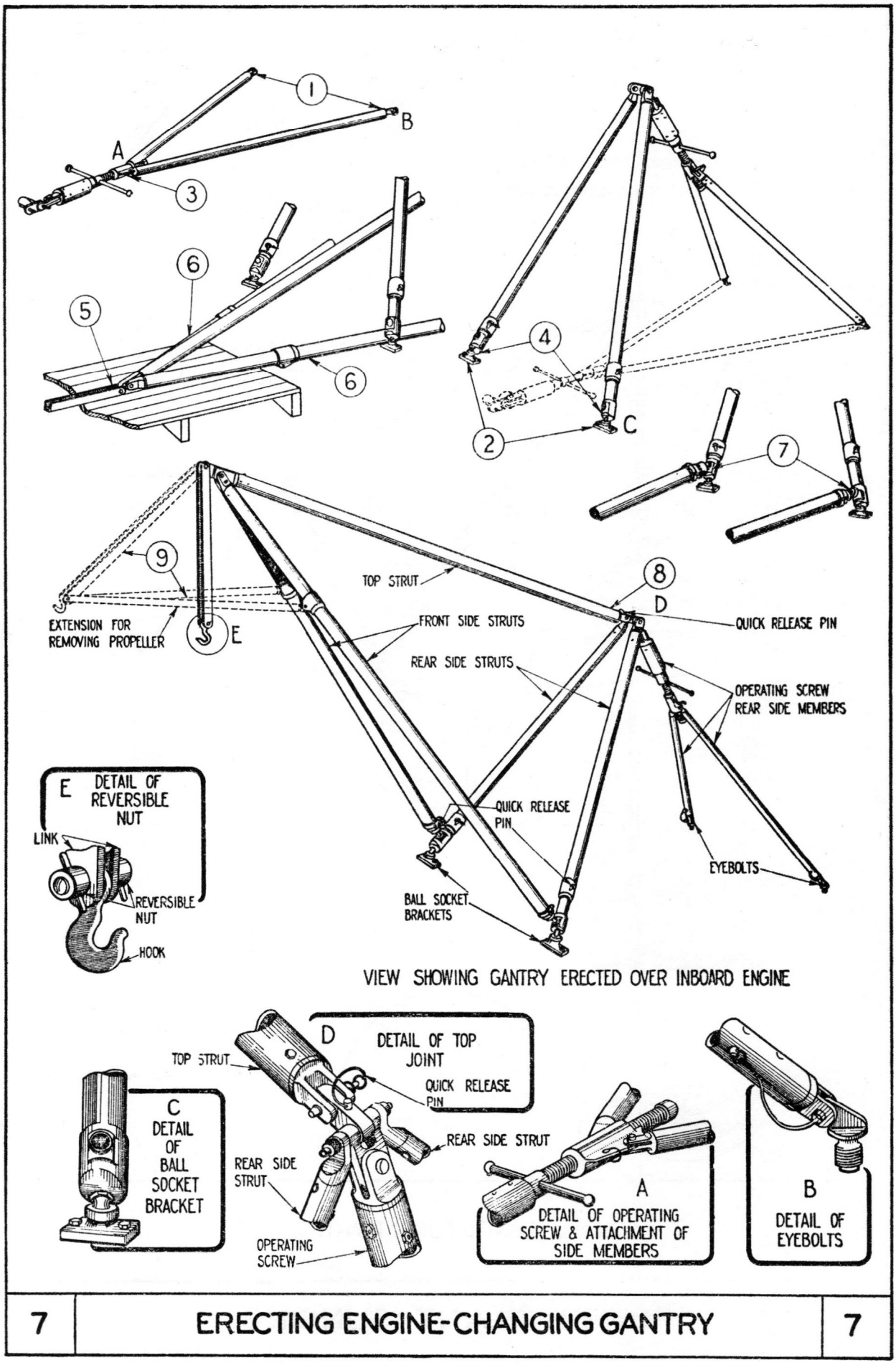

7	ERECTING ENGINE-CHANGING GANTRY	7

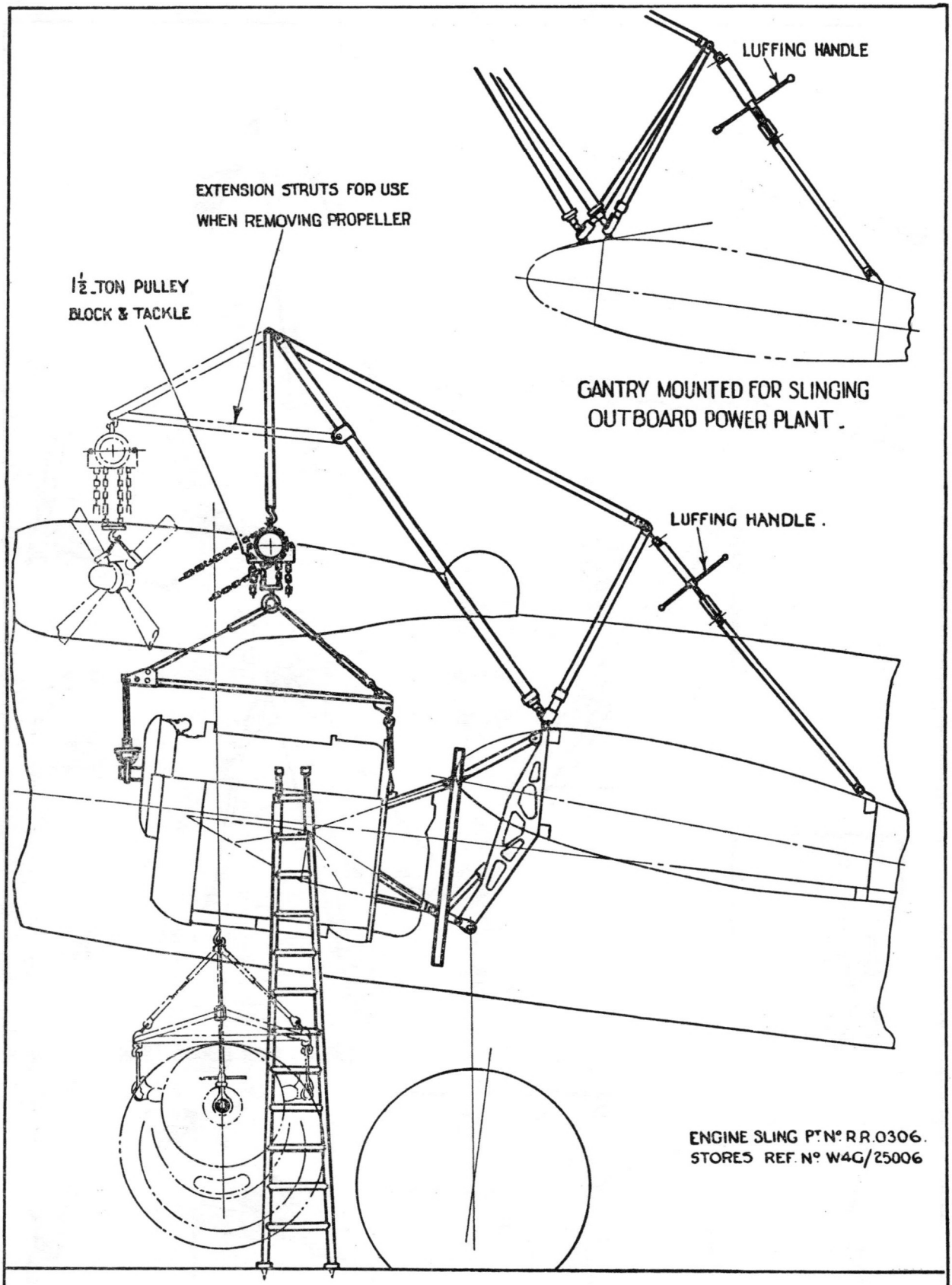

SLINGING INBOARD POWER PLANT.

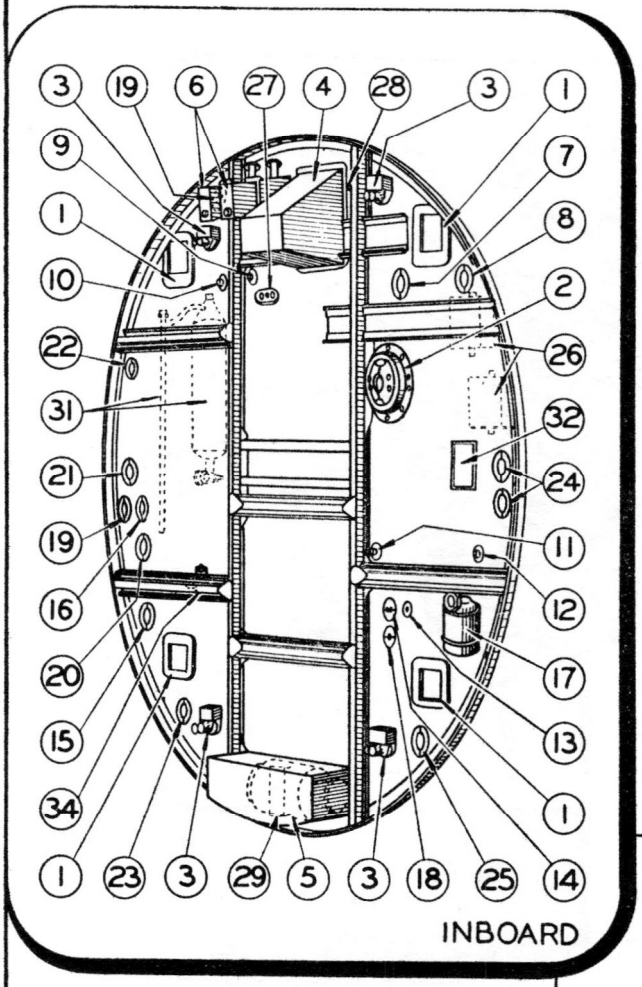

REFERENCES

1. SEALING WASHERS AT CUT-OUTS FOR SUB-FRAME LUGS.
2. COVER FOR COUPLING OF ACCESSORY GEARBOX DRIVE.
3. FLAME SWITCHES - FOUR ON EACH FIREWALL.
4. COVER FOR ENGINE CONTROL COUNTERSHAFT.
5. OIL - AND - WATER DRAINS TANK.
6. OIL SEPERATOR TANKS. TWO ARE ON STARBOARD INBOARD FIREWALL, ONE ON PORT INBOARD FIREWALL, NONE ARE ON OUTBOARD FIREWALLS.
7. FAIRLEAD FOR ELECTRICAL SERVICES CABLE.
8. FAIRLEAD FOR ENGINE SERVICES CABLE.
9. BOOST PIPE CONNECTOR.
10. DOPER PIPE CONNECTOR.
11. FUEL VENT PIPE CONNECTOR.
12. AIR SUPPLY PIPE CONNECTOR.
13. FAIRLEAD FOR FUEL FLOWMETER CABLE.
14. FAIRLEAD FOR FLAME SW. AND PRESSURE CUT-OUT CABLES.
15. FAIRLEAD FOR ENGINE STARTER CABLE.
16. FAIRLEAD FOR IGNITION CABLE.
17. FUEL FILTER
18. FAIRLEAD FOR ACCESSORY DRAIN - INBOARD FIREWALL.
19. FAIRLEAD FOR CABIN HEATER COOLANT PIPES - INBOARD FIREWALL
20. FAIRLEAD FOR OIL SUPPLY PIPE.
21. FAIRLEAD FOR OIL RETURN PIPE.
22. FAIRLEAD FOR OIL VENT PIPE.
23. FAIRLEAD FOR FIRE EXTINGUISHER PIPE - ONE BOTTLE SYSTEM.
24. FAIRLEADS FOR FIRE EXTINGUISHER PIPES - TWO BOTTLE SYSTEM.
25. FAIRLEAD FOR FEATHERING UNIT SUPPLY PIPE.
26. FUEL PUMP SUPPRESSORS - INBOARD FIREWALL
27. FAIRLEAD FOR OIL SEPARATOR PIPES - INBOARD FIREWALL.
28. FAIRLEAD FOR BOOST CUT-OUT CABLE.
29. FEATHERING PUMP ON AFT FACE OF FIREWALL.
30. DOPER VALVE ON AFT FACE OF OUTBOARD FIREWALL.
31. OIL - AND - WATER TRAP ON AFT FACE OF PORT INBOARD FIREWALL.
32. NOMENCLATURE CARD HOLDER.
33. DELAY ACTION SWITCH ON AFT FACE OF OUTBOARD FIREWALL.
34. REGULATOR VALVE ON AFT FACE OF STARBOARD INBOARD FIREWALL.

REMOVAL INSTRUCTIONS

INBOARD FIREWALLS ONLY.

DISCONNECT ACCESSORY DRAINPIPE AT T-PIECE AFT OF FIREWALL.
DISCONNECT PIPES TO OIL SEPARATOR TANKS AT AUX. GEARBOX.
DISCONNECT PIPE TO OIL-WATER TRAP AT T-PIECE AND DELIVERY PIPE TO PRESSURE-REGULATING VALVE AT FIREWALL, UNCLIP PIPES.
REMOVE PULSOMETER PUMP (SEE FIG. 14)
DISCONNECT BOOST AND DOPER PIPES AT UNIONS, AND UNCLIP FROM REAR FACE OF FIREWALL

OUTBOARD FIREWALLS ONLY.

DISCONNECT ELECTRICAL CABLES GOING AFT AT TERMINAL BLOCKS ON REAR FACE OF FIREWALL.
DISCONNECT BOOST PIPE AT UNION, AND FUEL SUPPLY PIPE TO DOPER VALVE AT T-PIECE, AND UNCLIP PIPES FROM REAR FACE OF FIREWALL.

INBOARD AND OUTBOARD FIREWALLS.

REMOVE ALL SPLIT FAIRLEADS IN ORDER THAT PIPES AND CABLES CAN BE WITHDRAWN THROUGH FIREWALL.
DISCONNECT AIR SUPPLY PIPE AT UNION ON AFT SIDE OF FIREWALL, AND UNCLIP.
THE OIL TANK BEING EMPTY, DISCONNECT THE PIPE FROM THE OIL TANK TO THE FEATHERING PUMP AT THE PUMP, AND REMOVE PUMP.
REMOVE CONTROL COVER FROM FIREWALL AND DISCONNECT ENGINE CONTROL RODS AT TURNBUCKLES.
UNCLIP IGNITION CABLES FROM AFT FACE OF FIREWALL.
DISCONNECT FUEL VENT PIPE AT UNION ON AFT FACE OF FIREWALL
DISCONNECT PIPE TO FUEL FILTER AT CONNECTION ON AFT FACE OF FIREWALL.
REMOVE SEALING WASHERS AT CUT-OUTS FOR SUB-FRAME LUGS
UNBOLT AND REMOVE CLIPS SECURING FIREWALL TO SUB-FRAME
HOLDING FIREWALL SECURELY, DRAW FORWARD OFF SUB-FRAME ALLOWING ALL PIPES AND CABLES TO PASS THROUGH FIREWALL.

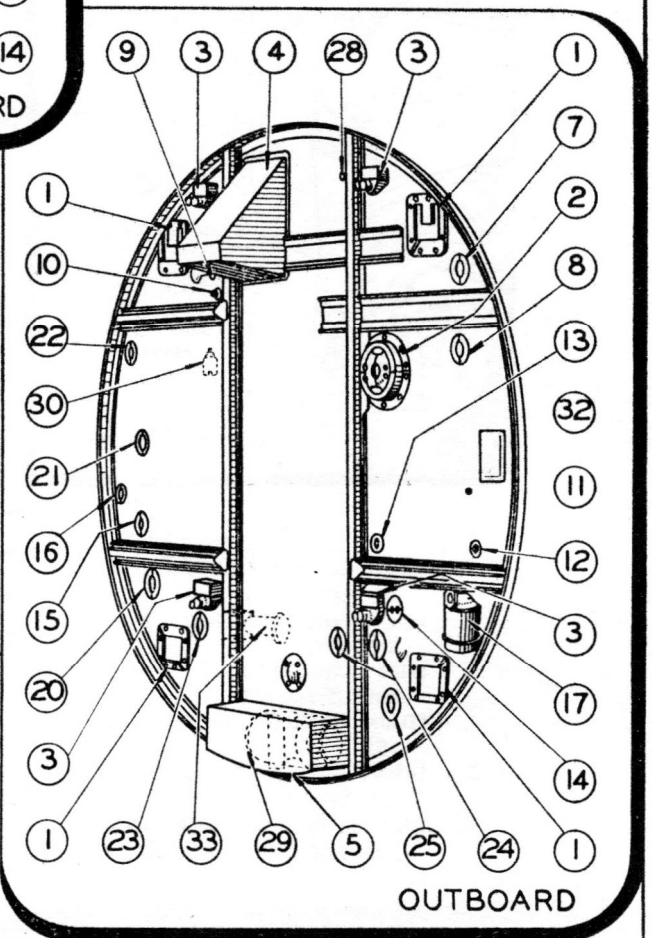

9	FIREWALL DETAILS	9

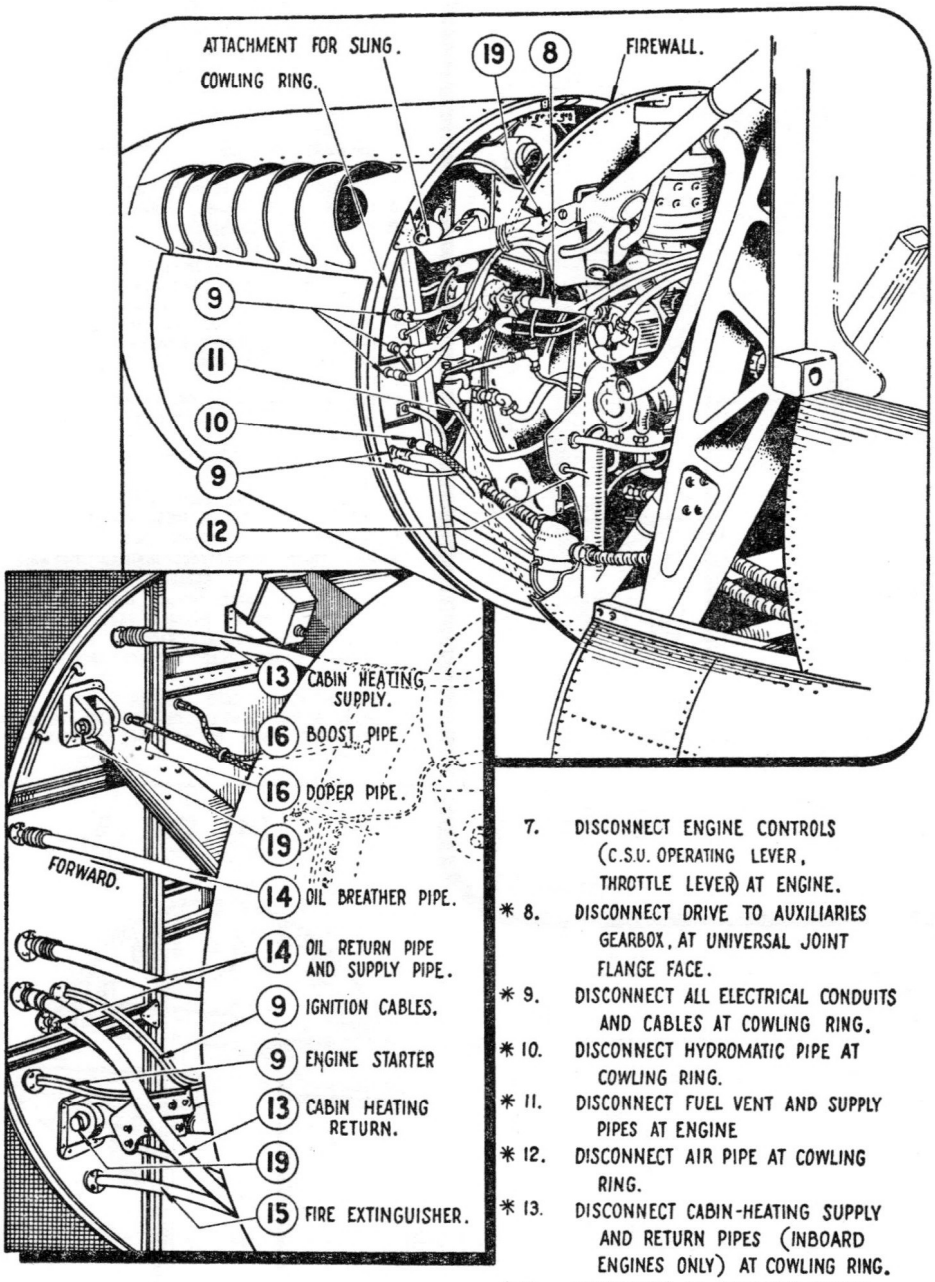

1. REMOVE PANELS BETWEEN COWLING RING AND FIREWALL.
2. REMOVE FAIRING PANELS AFT OF FIREWALL.
3. ERECT GANTRY (SEE FIG. 7.) IF NO CRANE IS AVAILABLE.
4. REMOVE PROPELLER (SEE FIG. 7. AND 8)
5. ENSURE THAT MASTER ENGINE COCK IS IN OFF POSITION.
6. DRAIN OIL FROM TANK BY REMOVING DRAIN PLUG AND OPENING FILLER.
7. DISCONNECT ENGINE CONTROLS (C.S.U. OPERATING LEVER, THROTTLE LEVER) AT ENGINE.
* 8. DISCONNECT DRIVE TO AUXILIARIES GEARBOX, AT UNIVERSAL JOINT FLANGE FACE.
* 9. DISCONNECT ALL ELECTRICAL CONDUITS AND CABLES AT COWLING RING.
* 10. DISCONNECT HYDROMATIC PIPE AT COWLING RING.
* 11. DISCONNECT FUEL VENT AND SUPPLY PIPES AT ENGINE
* 12. DISCONNECT AIR PIPE AT COWLING RING.
* 13. DISCONNECT CABIN-HEATING SUPPLY AND RETURN PIPES (INBOARD ENGINES ONLY) AT COWLING RING.
* 14. DISCONNECT OIL BREATHER, SUPPLY, AND RETURN PIPES AT COWLING RING.
* 15. DISCONNECT FIRE EXTINGUISHER PIPE.
* 16. DISCONNECT BOOST AND DOPER PIPES AT ENGINE
17. DISCONNECT PIPE TO DRAIN TANK AT BOTTOM OF FIREWALL. REMOVE TANK.
18. ATTACH SLINGS (SEE FIG. 8)
* 19. TAKE WEIGHT AND REMOVE BOLTS SECUREING ENGINE MOUNTING TO SUB-FRAME.

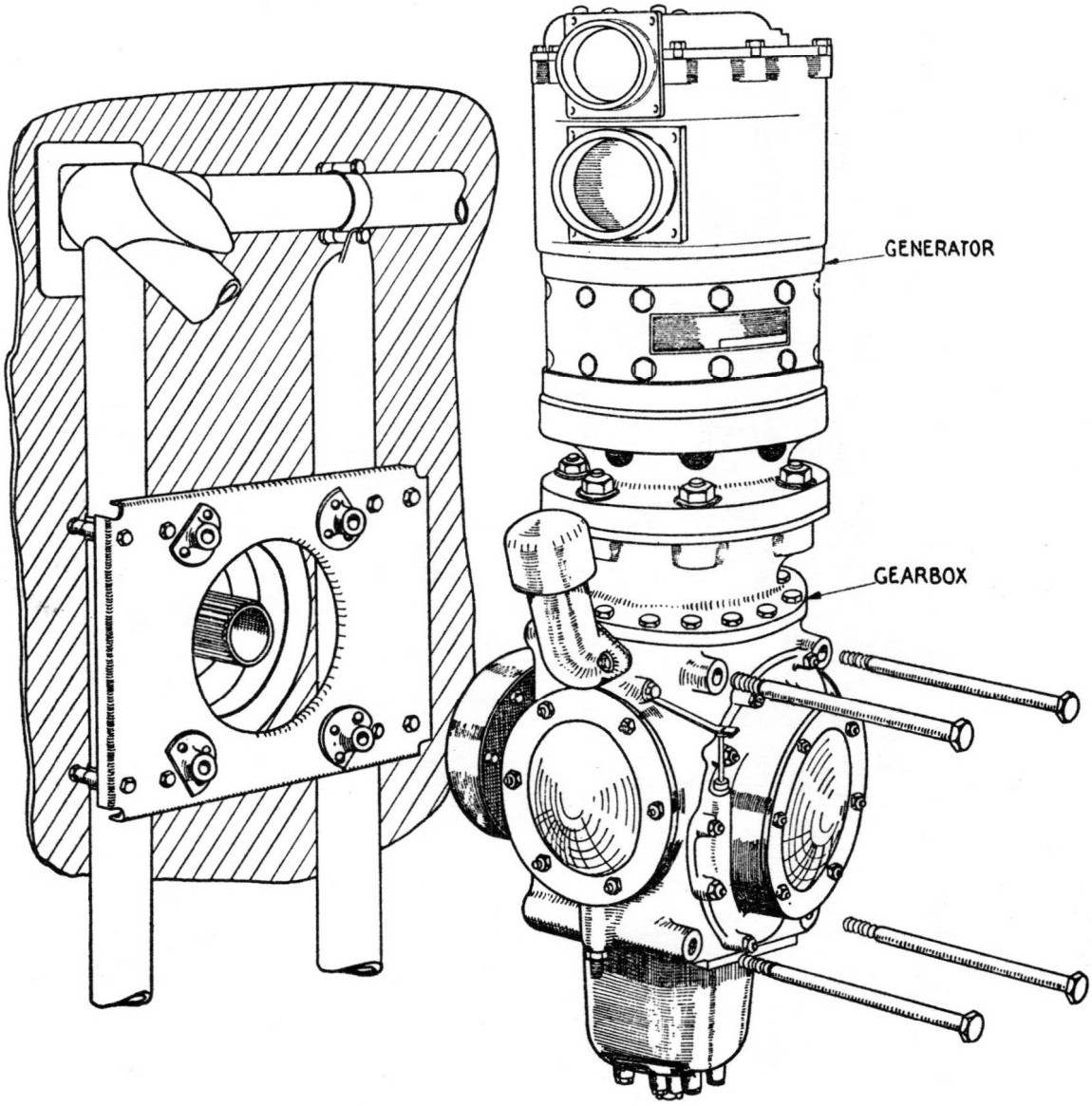

1. REMOVE FAIRING PANELS. (SEE FIG. 6)
2. DISCONNECT LEADS AT TOP OF GENERATOR.
3. REMOVE ATTACHMENT BOLT NUTS BEHIND MOUNTING PLATE ON ENGINE SUB-FRAME.
4. WITHDRAW GEARBOX, COMPLETE WITH GENERATOR FROM MOUNTING.

11	OUTBOARD AUXILIARY GEARBOX	11

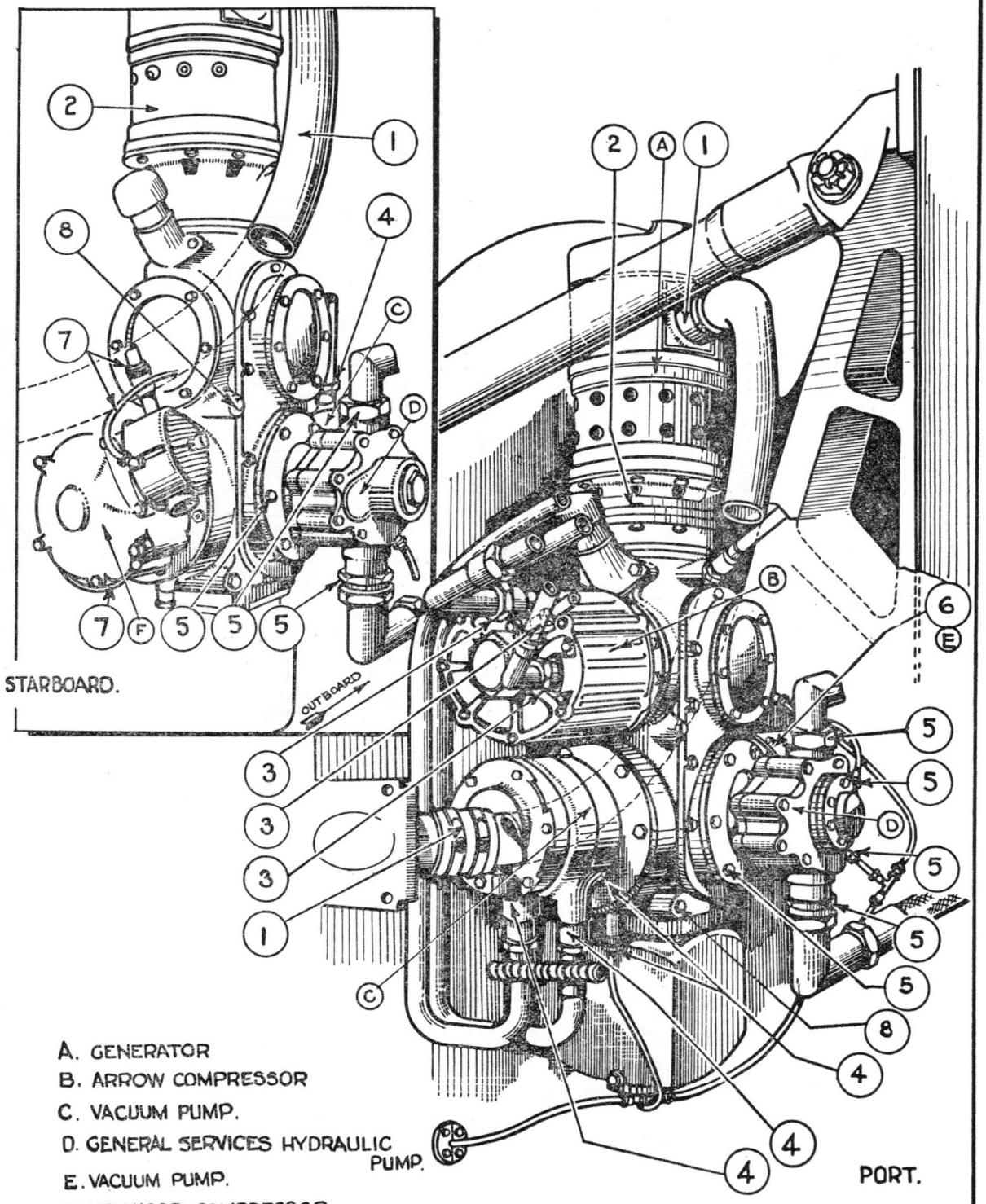

A. GENERATOR
B. ARROW COMPRESSOR
C. VACUUM PUMP.
D. GENERAL SERVICES HYDRAULIC PUMP.
E. VACUUM PUMP.
F. HEYWOOD COMPRESSOR.

* FOR METHOD OF REMOVAL SEE FIG. 13.

REMOVAL INSTRUCTIONS.

*(1) REMOVE CLIPS SECURING COOLING PIPE TO GENERATOR

*(2) REMOVE BOLTS SECURING GENERATOR TO GEARBOX.

*(3) DISCONNECT PIPES AT ARROW COMPRESSOR AND REMOVE BOLTS SECURING COMPRESSOR TO GEARBOX.

*(4) DISCONNECT PIPES AT VACUUM PUMP AND REMOVE BOLTS SECURING PUMP TO GEARBOX.

*(5) DISCONNECT PIPES AT GENERAL SERVICES HYDRAULIC PUMP AND REMOVE BOLTS SECURING PUMP TO GEARBOX.

*(6) DISCONNECT PIPES AT VACUUM PUMP AND REMOVE BOLTS SECURING PUMP TO GEARBOX.

*(7) DISCONNECT PIPES AT HEYWOOD COMPRESSOR AND REMOVE BOLTS SECURING COMPRESSOR TO GEARBOX.

*(8) REMOVE FOUR BOLTS SECURING GEARBOX TO MOUNTING, SLIDE OFF GEARBOX DRIVE (SEE DETAIL BELOW) AND LOWER FROM MACHINE.

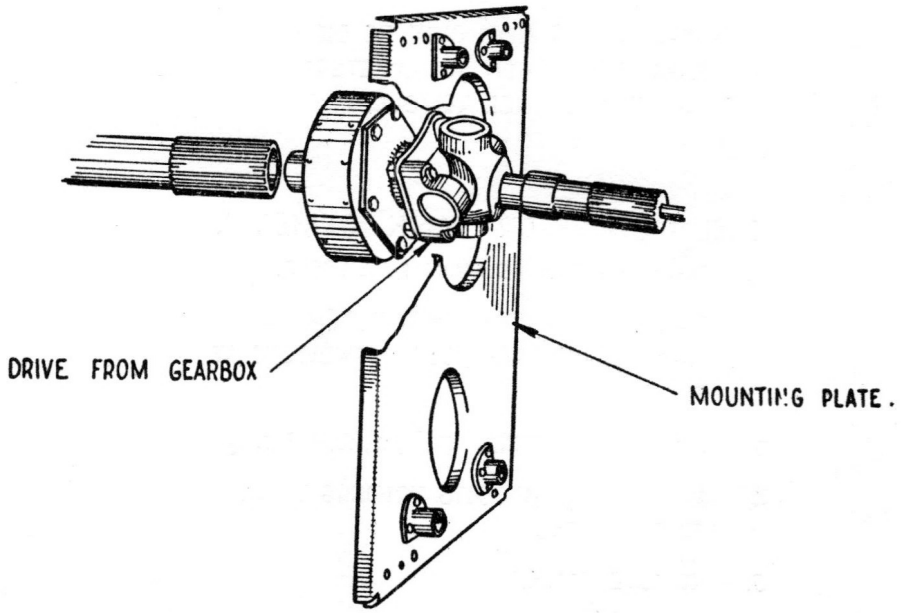

VIEW SHOWING GEAR DRIVE WITHDRAWN

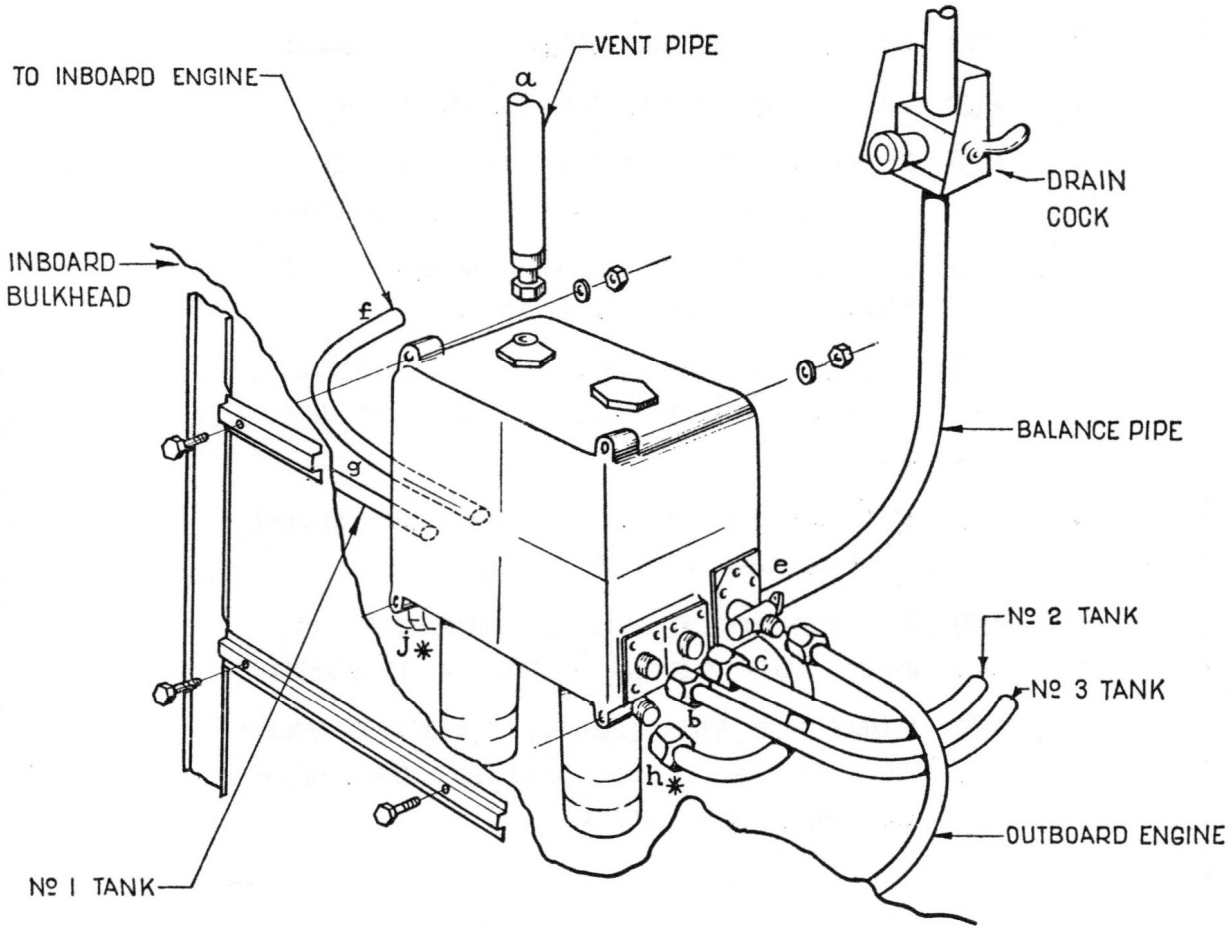

* PIPES h & j NEED ONLY BE DISCONNECTED WHEN PULSOMETER PUMPS ARE TO BE REMOVED.

FUEL DISTRIBUTOR TANK REMOVAL

1. TURN OFF ALL THE MAIN FUEL COCKS.
2. DRAIN FUEL FROM DISTRIBUTOR TANK, THROUGH THE DRAIN COCKS, PROVIDED AT THE BOTTOM.
3. DISCONNECT PIPES a, b, c, d, e, f & g
4. REMOVE THE 4 BOLTS HOLDING TANK TO BULKHEAD.
5. REMOVE TANK.

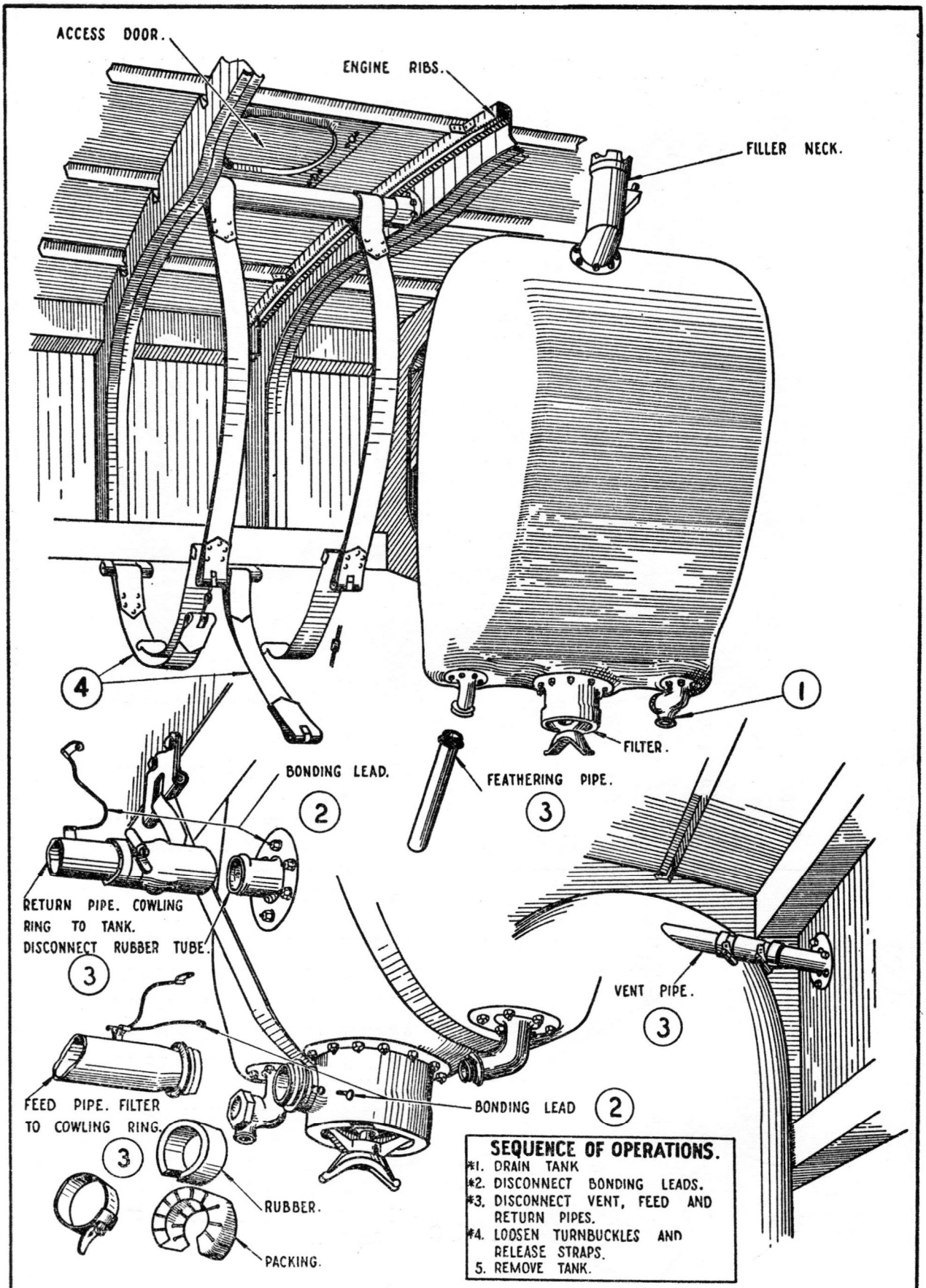

15	INBOARD OIL TANK	15

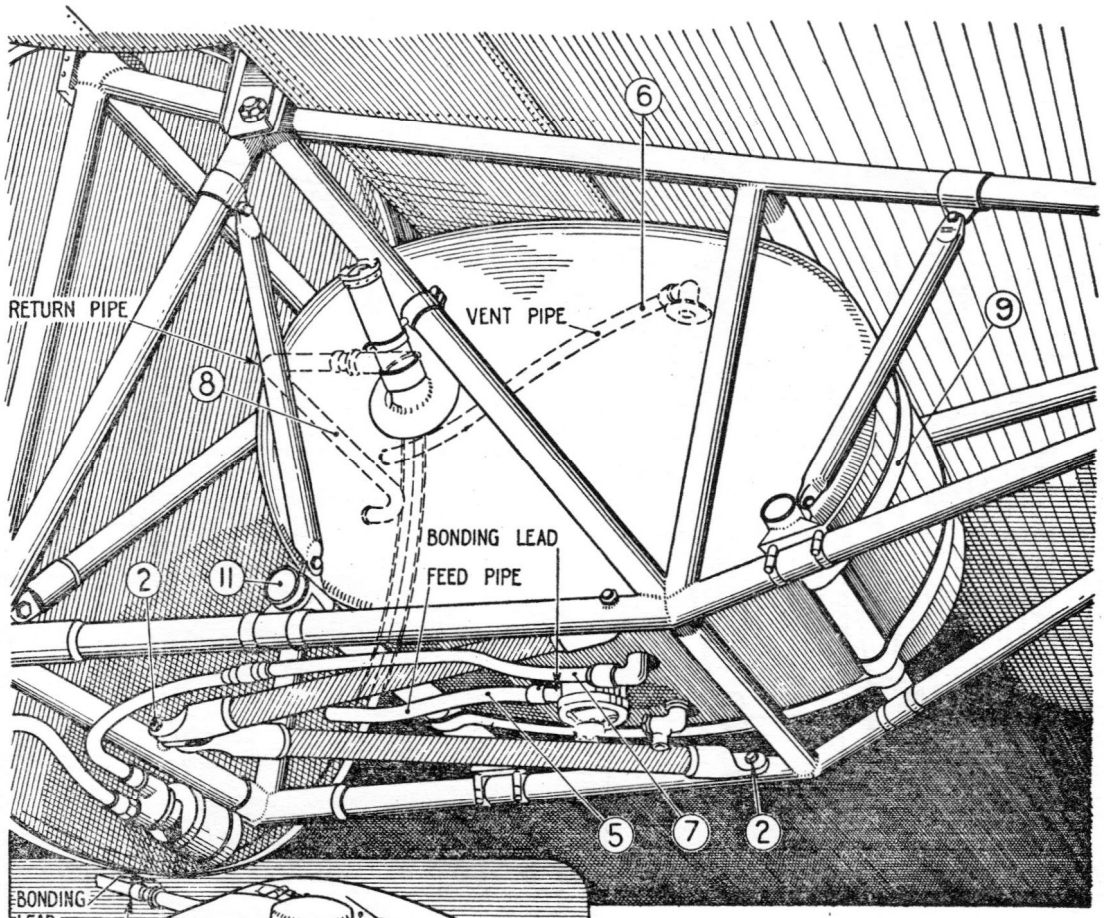

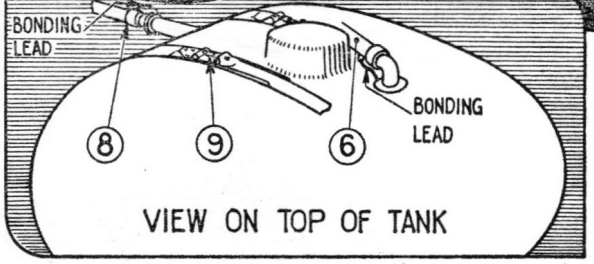

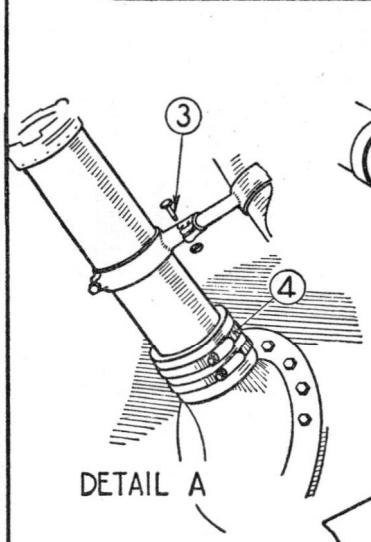

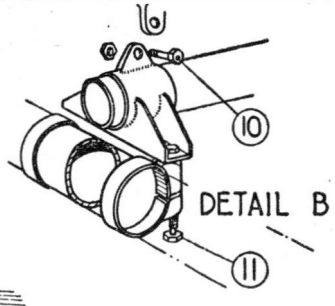

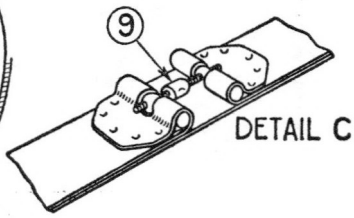

1 DRAIN THE TANK

*2 REMOVE BOLTS SECURING BRACING STRUTS SHOWN SHADED.

*3 REMOVE BOLT SECURING TANK FILLER NECK TO SUBFRAME AND REMOVE BONDING LEAD.- SEE DETAIL A

*4 REMOVE FILLER NECK BY SLACKENING OFF CLIPS AT BASE.- SEE DETAIL A

*5 DISCONNECT FEED PIPE FROM TANK.

*6 DISCONNECT VENT PIPE FROM TANK.

*7 DISCONNECT FEATHERING PIPE FROM TANK.

*8 DISCONNECT RETURN PIPE FROM TANK.

*9 DISCONNECT TANK STRAPS ON TOP OF TANK - SEE DETAIL C

*10 REMOVE BOLTS SECURING BRACING STRUTS TO TANK CROSS MEMBER - SEE DETAIL B

*11 REMOVE BOLTS SECURING CROSS MEMBER TO SUBFRAME - SEE DETAIL B

12 LOWER TANK THROUGH BOTTOM OF SUBFRAME.

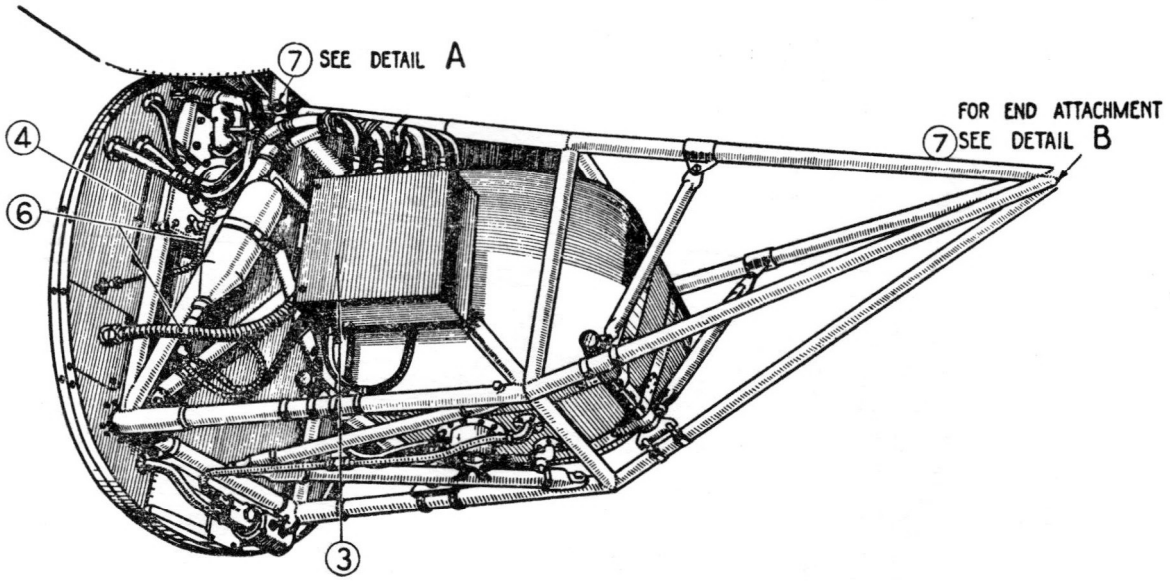



DETAIL A

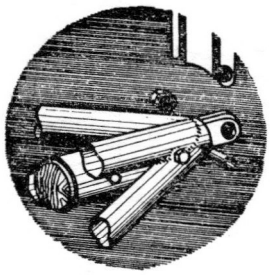

DETAIL B

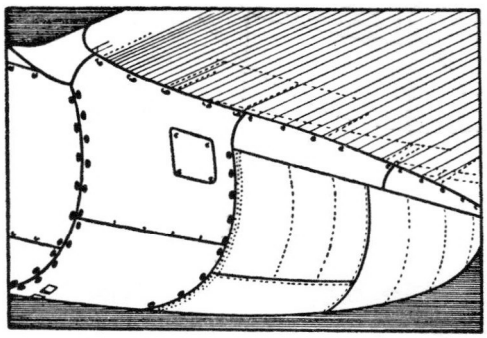

DETAILS OF REAR NACELLE FAIRINGS

1 REMOVE POWER PLANT (SEE FIG. 10)

2 REMOVE NACELLE FAIRINGS AS FOLLOWS:-
(a) RELEASE DZUS FASTENERS AND REMOVE PANELS 1 2 & 3
(b) UNBOLT SUB-FRAME ATTACHMENT BK'TS INSIDE FORWARD EDGE OF REAR FAIRING AND REMOVE FAIRING BY RELEASING DZUS FASTENERS.

*3 DISCONNECT AT JUNCTION BOX AND UNCLIP FROM SUB-FRAME ALL ELECTRIC CABLES PASSING FROM FRONT SPAR INTO SUB-FRAME
NOTE:- IGNITION CABLES TO BE DISCONNECTED AT FIREWALL, UNCLIPPED AND COILED AT THE SPAR.

*4 DISCONNECT PNEUMATIC BOOST AND DOPER PIPES AT UNIONS JUST INBOARD OF NACELLE.

5 DISCONNECT ENGINE CONTROL RODS BETWEEN FRONT SPAR AND BULKHEAD.

*6 DISCONNECT FUEL SUPPLY PIPE AND FUEL VENT PIPE.

*7 REMOVE BOLTS SECURING SUB-FRAME TO CHANNELS. SEE DETAILS A & B

NOTE:- ON REPLACEMENT THE INBOARD FRONT SPAR ATTACHMENT BOLT MUST BE INSERTED FROM INSIDE THE SUB-FRAME.

17	OUTBOARD ENGINE SUB-FRAME	17

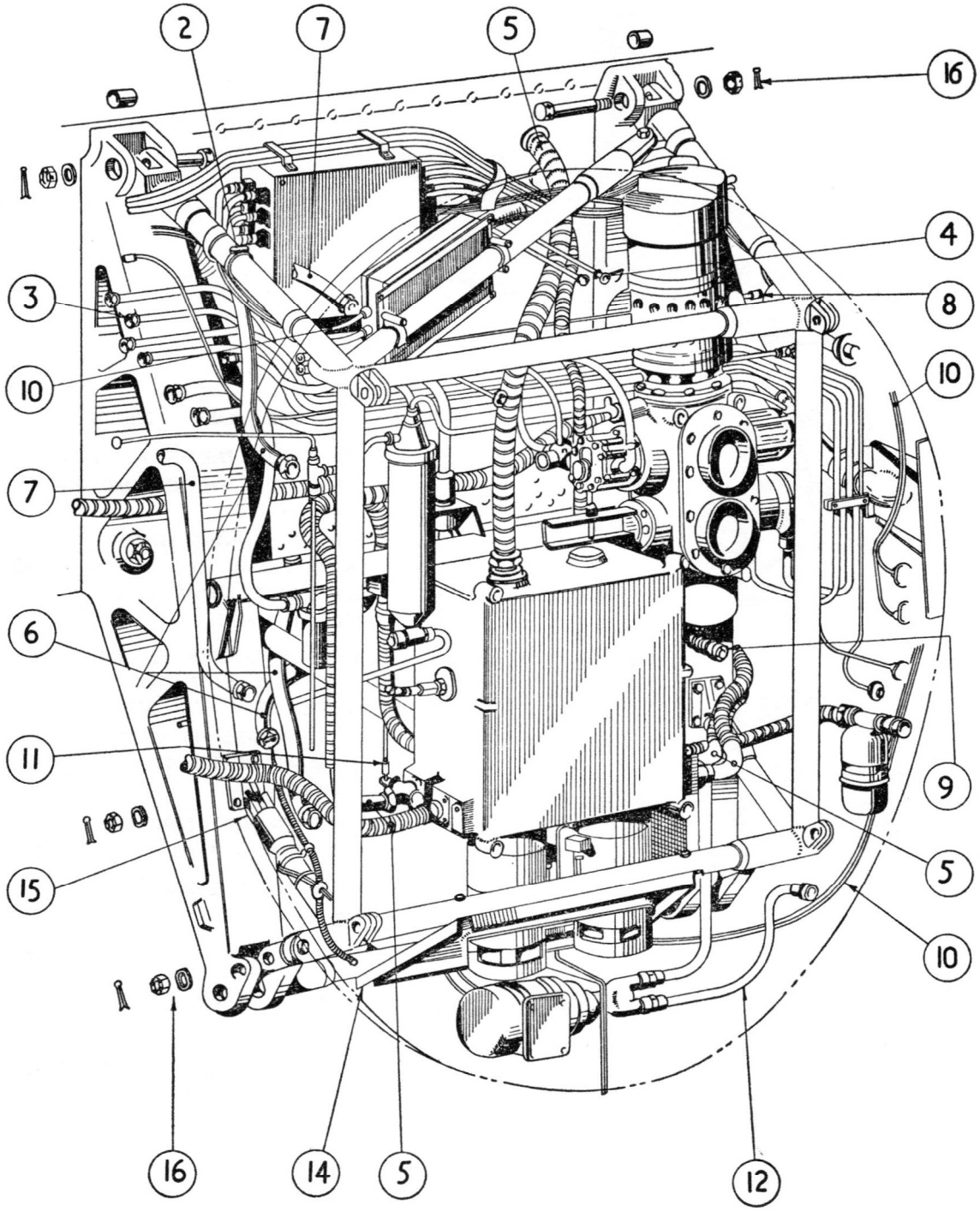

FOR REFERENCES AND DETAILS, SEE FIG. 19.

18	INBOARD ENGINE SUB-FRAME (1)	18

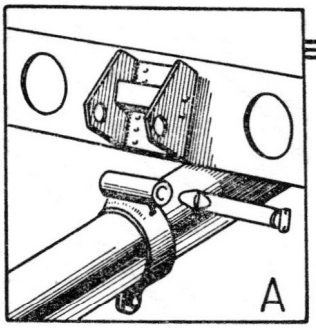

1 REMOVE POWER PLANT (SEE FIG. 10)
*2 REMOVE QUICK RELEASE PINS SECURING HINGED TOP PANEL TO SUB-FRAME (SEE DETAIL A).
*3 DISCONNECT HYDRAULIC AND OTHER PIPE SERVICES AT NEAREST JOINT IN NACELLE.
*4 DISCONNECT ENGINE CONTROL RODS AT COUNTERSHAFT ON FIREWALL.
*5 DISCONNECT FUEL PIPES AT DISTRIBUTOR TANK.
*6 DISCONNECT OIL PIPES AT TANK OR FRONT SPAR.
*7 DISCONNECT CABIN HEATING PIPES AT FIREWALL.
*8 DISCONNECT BOOST PIPE AT AFT FACE OF FIREWALL.
*9 DISCONNECT FUEL VAPOUR VENT PIPE AT FIREWALL.
*10 DISCONNECT ELECTRICAL SERVICES AT JUNCTION BOX OR FIREWALL AS NECESSARY. REMOVE CLIPS SECURING ELECTRICAL SERVICES TO SUB-FRAME.
*11 DISCONNECT FUEL COCK CONTROL CABLES AT DISTRIBUTOR TANK.
*12 DISCONNECT FEATHERING PIPE AT FIREWALL.
*13 DISCONNECT BOOST CUT-OUT CONTROL CABLE BY DETACHING FAIRLEAD, AND SLACKEN VICKERS PULLEY. WITHDRAW CABLE THROUGH FIREWALL, COIL AND TIE.
*14 REMOVE BRACING PLATE FROM UNDERSIDE OF SUB FRAME.
*15 REMOVE BOLTS SECURING BRACING STRUTS TO UNDERCARRIAGE BEAMS.
*16 SUPPORT SUB-FRAME, REMOVE SPLIT-PINS, NUTS AND WASHERS FROM ATTACHMENT BOLTS (4). REMOVE BOLTS, NOTING DISTANCE TUBE AT EACH JOINT (DETAIL B SHOWS ARRANGEMENT OF BOTTOM JOINT.)

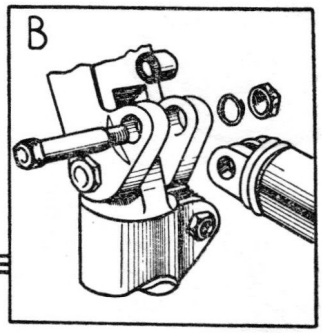

19	INBOARD ENGINE SUB-FRAME. (2)	19

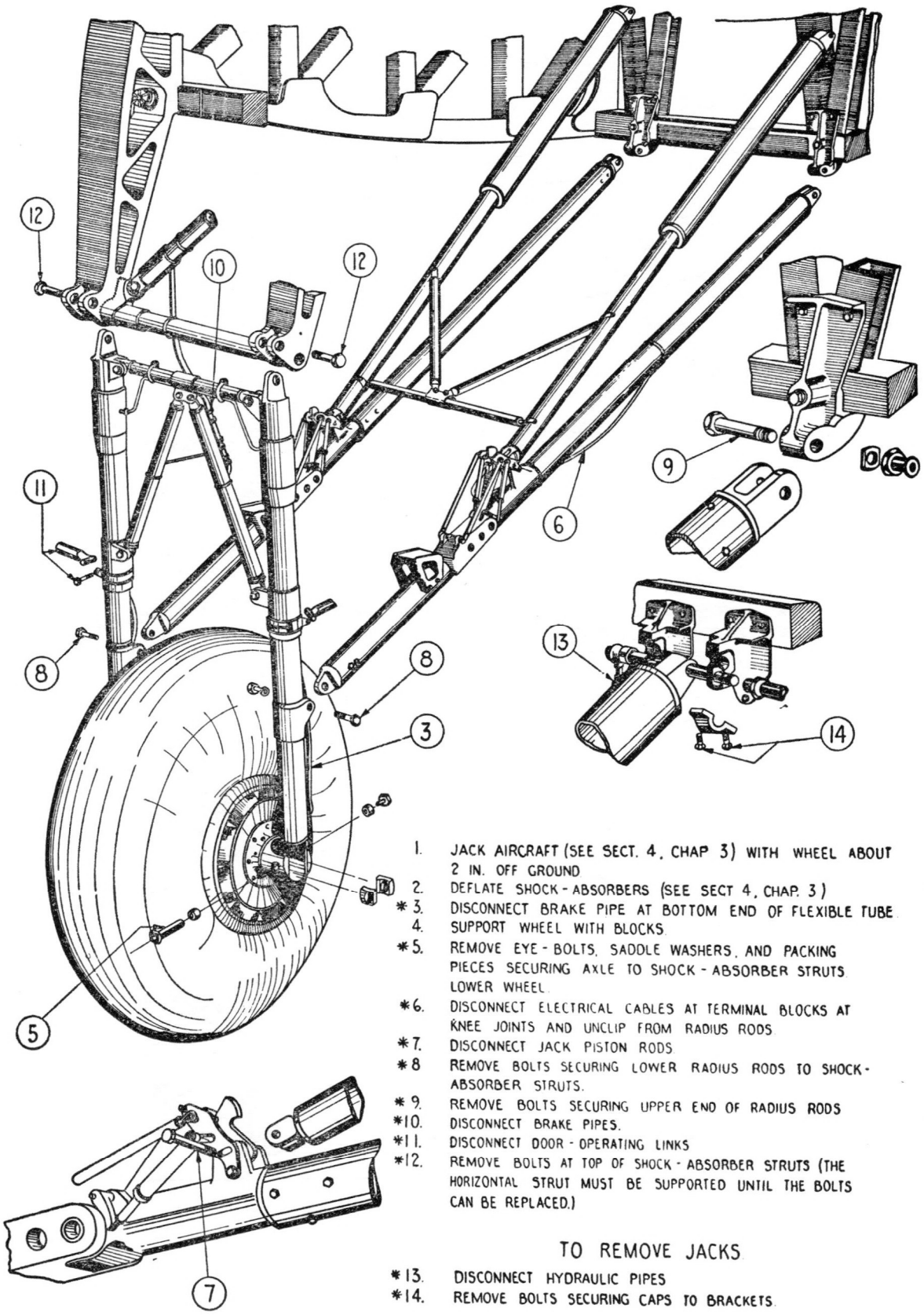

1. JACK AIRCRAFT (SEE SECT. 4, CHAP 3) WITH WHEEL ABOUT 2 IN. OFF GROUND.
2. DEFLATE SHOCK-ABSORBERS (SEE SECT 4, CHAP. 3)
*3. DISCONNECT BRAKE PIPE AT BOTTOM END OF FLEXIBLE TUBE.
4. SUPPORT WHEEL WITH BLOCKS.
*5. REMOVE EYE-BOLTS, SADDLE WASHERS, AND PACKING PIECES SECURING AXLE TO SHOCK-ABSORBER STRUTS. LOWER WHEEL.
*6. DISCONNECT ELECTRICAL CABLES AT TERMINAL BLOCKS AT KNEE JOINTS AND UNCLIP FROM RADIUS RODS.
*7. DISCONNECT JACK PISTON RODS.
*8 REMOVE BOLTS SECURING LOWER RADIUS RODS TO SHOCK-ABSORBER STRUTS.
*9. REMOVE BOLTS SECURING UPPER END OF RADIUS RODS.
*10. DISCONNECT BRAKE PIPES.
*11. DISCONNECT DOOR-OPERATING LINKS.
*12. REMOVE BOLTS AT TOP OF SHOCK-ABSORBER STRUTS (THE HORIZONTAL STRUT MUST BE SUPPORTED UNTIL THE BOLTS CAN BE REPLACED.)

TO REMOVE JACKS

*13. DISCONNECT HYDRAULIC PIPES.
*14. REMOVE BOLTS SECURING CAPS TO BRACKETS.

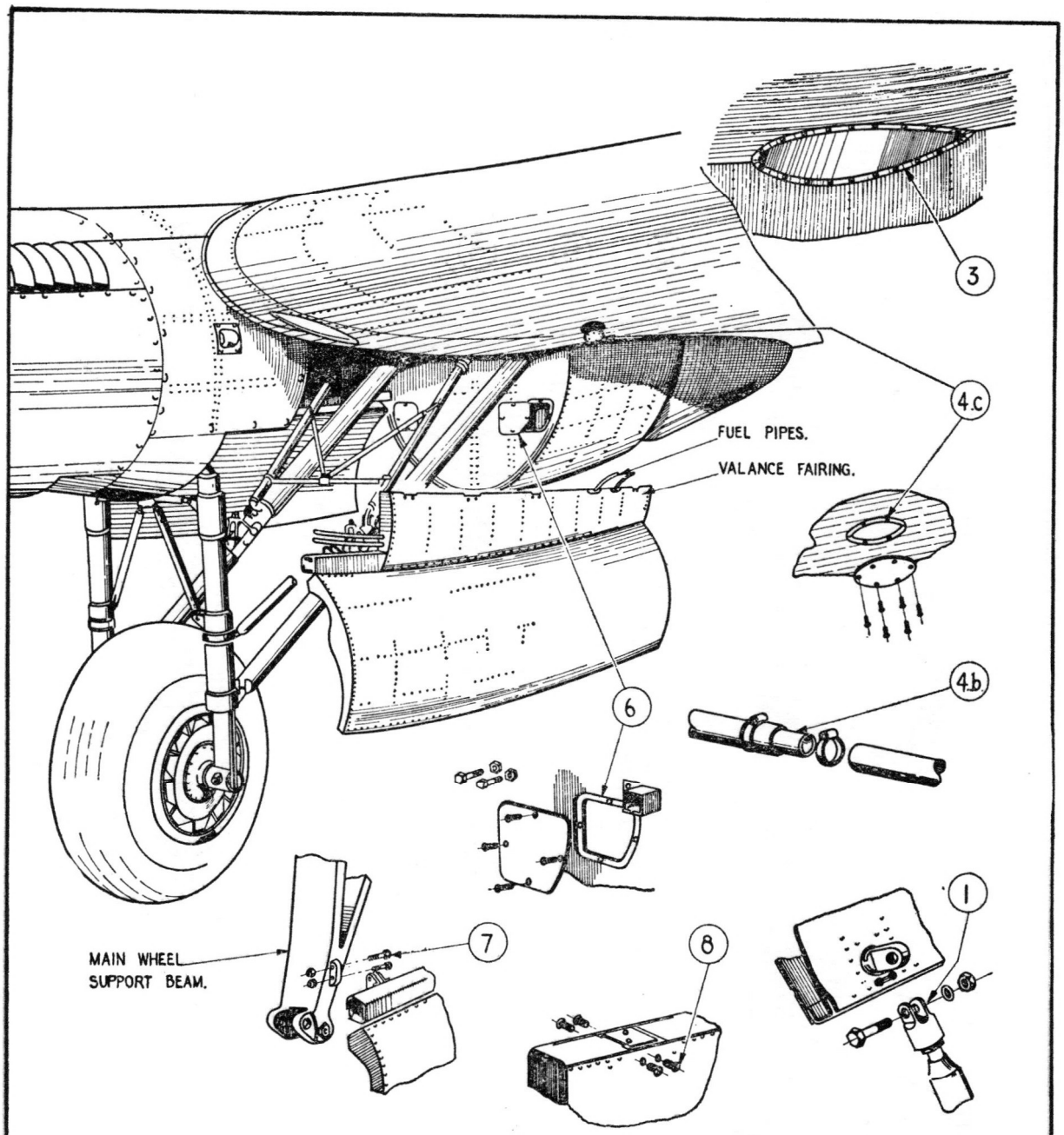

* 1. REMOVE THE BOLT SECURING THE DOOR OPERATING LINK TO THE ROTATING PIN IN THE LOWER EDGE OF THE DOOR.

2. DRAIN THE FUEL TANKS ON THE SIDE OF THE AIRCRAFT FROM WHICH THE VALANCE IS TO BE REMOVED. (SEE SECT. 4 CHAP. 3)

* 3. REMOVE THE FAIRING OVER THE FUEL PIPES AT THE MAIN PLANE AND VALANCE JOINT.

* 4. DISCONNECT THE FUEL PIPES AT THE REAR OF THE VALANCE:-
- (a) INBOARD VALANCE - UNCOUPLE THE FUEL PIPE AT No. 1 TANK SUMP.
- (b) OUTBOARD VALANCE - DISCONNECT THE PIPE TO No. 3 TANK AT THE JOINT
- (c) REMOVE THE ACCESS PANEL IN THE UNDERSIDE OF THE MAIN PLANE AND UNCOUPLE THE PIPE AT No. 2 TANK SUMP.

5. DISCONNECT THE FUEL PIPES AT THE DISTRIBUTOR TANK ON THE FIREWALL.

* 6. REMOVE THE INSPECTION DOOR IN THE FACE OF THE REAR FAIRING BULKHEAD AND REMOVE THE BOLTS SECURING THE DOOR RAIL TO THE REAR FAIRING.

* 7. REMOVE THE TWO BOLTS SECURING THE FRONT END OF THE DOOR RAIL TO THE MAIN WHEEL SUPPORT BEAM.

* 8. SUPPORT THE DOOR AND REMOVE THE SCREWS SECURING THE TOP OF THE VALANCE TO THE UNDERSIDE OF THE MAIN PLANE. THESE SCREWS ARE ON EACH SIDE OF THE TOP EDGE OF THE VALANCE.

9. LOWER THE DOOR AND VALANCE FROM THE AIRCRAFT, TOGETHER WITH THE LENGTHS OF FUEL PIPING.

21	MAIN WHEEL DOOR AND VALANCE FAIRING	21

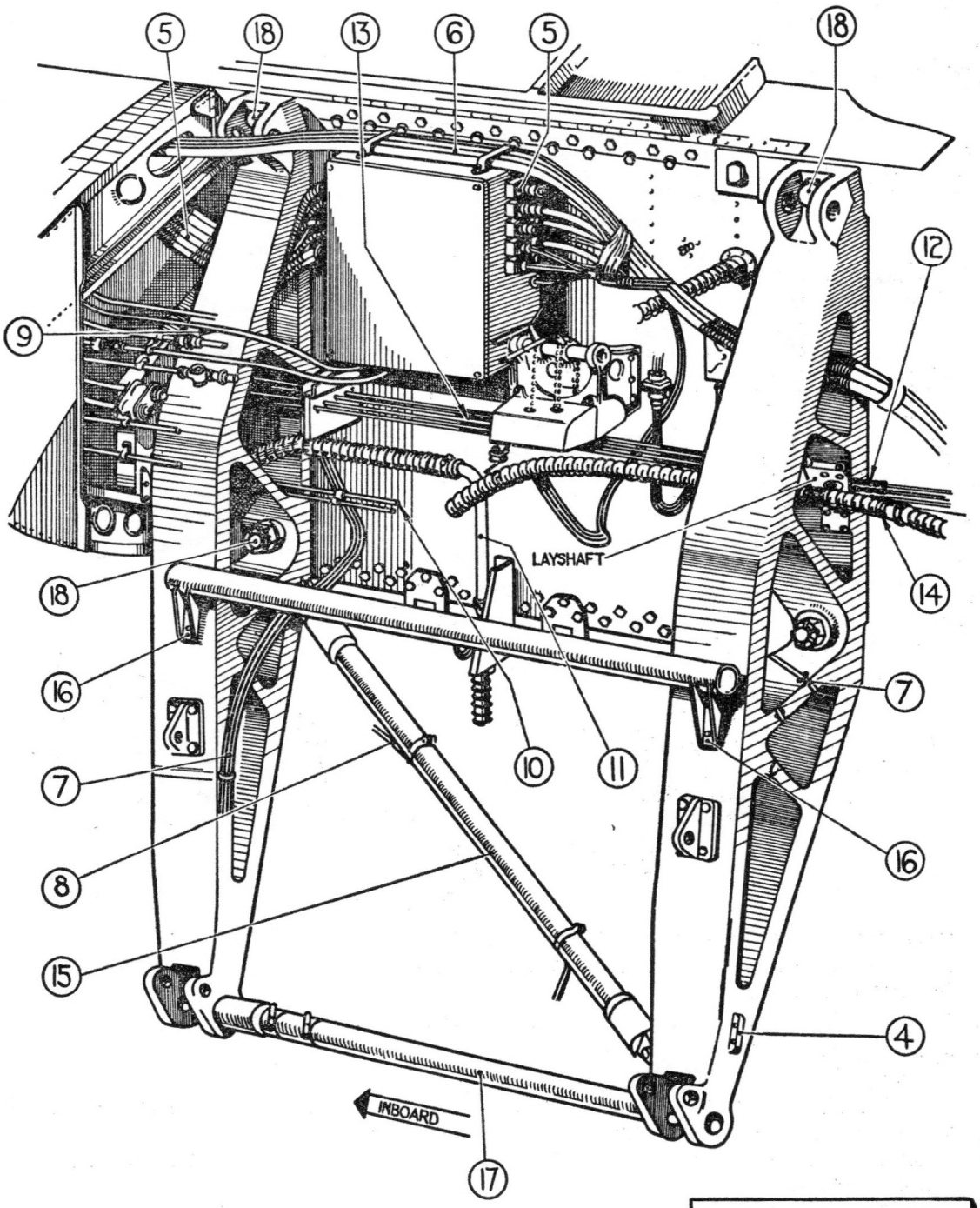

FOR KEY AND DETAILS SEE THE FOLLOWING ILLUSTRATION.

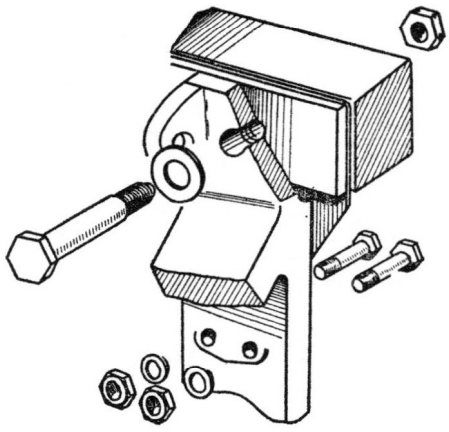

DETAIL A

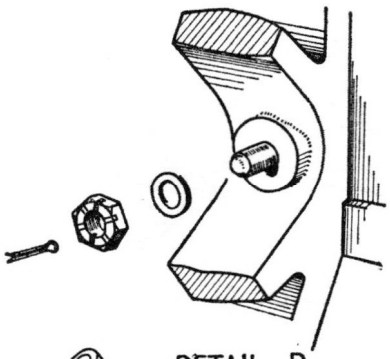

DETAIL B

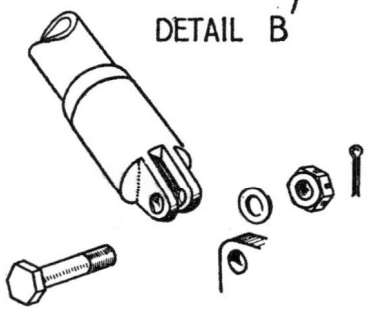

DETAIL C



DETAIL D

1 REMOVE POWER PLANT SEE FIG. 10

2 REMOVE SUB FRAME SEE FIG. 18 - 19

3 REMOVE MAIN WHEEL UNIT SEE FIG. 20

* 4 REMOVE BOLTS SECURING MAIN WHEEL DOOR HINGE BEAM TO SUPPORT BEAM SEE ALSO FIG. 21

* 5 DISCONNECT ELECTRICAL CONDUITS AT JUNCTION BOX ON FRONT SPAR AND WITHDRAW THROUGH BEAM.

* 6 DISCONNECT ELECTRICAL CONDUITS AT JUNCTION BOX ON OUTBOARD SUB-FRAME AND WITHDRAW THROUGH TUBE IN LEADING EDGE AND THROUGH BEAM.

* 7 REMOVE CLIPS SECURING ELECTRICAL CABLES TO BEAM.

* 8 REMOVE CLIPS SECURING PIPE TO DIAGONAL STRUT.

* 9 DISCONNECT HYDRAULIC PIPES AT JOINTS NEAR BEAM.

*10 DISCONNECT FUEL COCK CONTROLS AT CONNECTOR BLOCK ON FRONT SPAR.

*11 DISCONNECT FUEL CROSS-FEED PIPE AT DRAIN COCK AND WITHDRAW THROUGH BEAM.

*12 DISCONNECT ENGINE CONTROL RODS AT EACH SIDE OF LAYSHAFT (SEE DETAIL D) AND REMOVE BOLTS SECURING LAYSHAFT TO BEAM.

*13 DISCONNECT ENGINE CONTROL RODS AT SPROCKET BOX BETWEEN BEAMS AND AT FRONT SPAR (IN FUSELAGE) AND WITHDRAW THROUGH BEAM.

*14 DISCONNECT FUEL FEED PIPE AND WITHDRAW THROUGH BEAM.

*15 REMOVE BOLTS SECURING DIAGONAL STRUT TO BEAMS (SEE DETAIL C).

*16 REMOVE BOLTS SECURING CROSS-MEMBER TO BEAMS.

*17 REMOVE LOWER BRACING STRUT.

*18 REMOVE TOP ATTACHMENT BOLTS (SEE DETAIL A), AND NUTS FROM BOTTOM ATTACHMENT STUDS (SEE DETAIL B). LOWER BEAMS FROM SPAR.

23	UNDERCARRIAGE BEAMS (2)	23

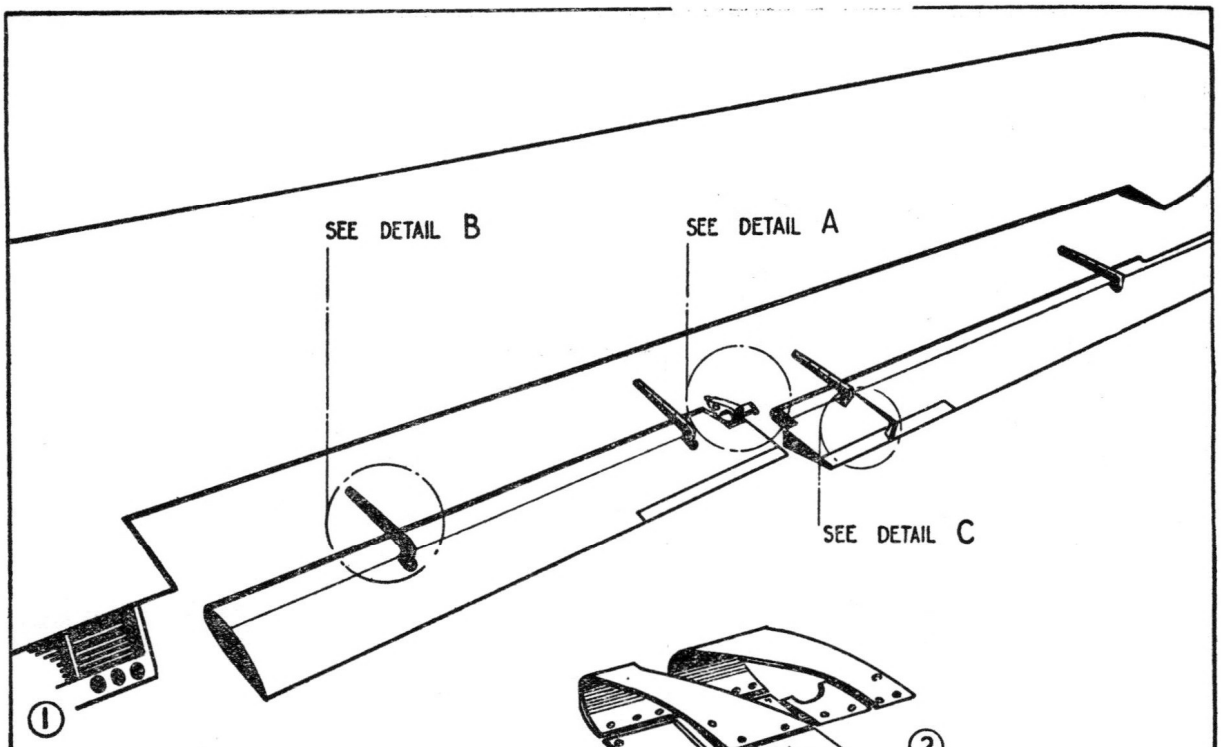

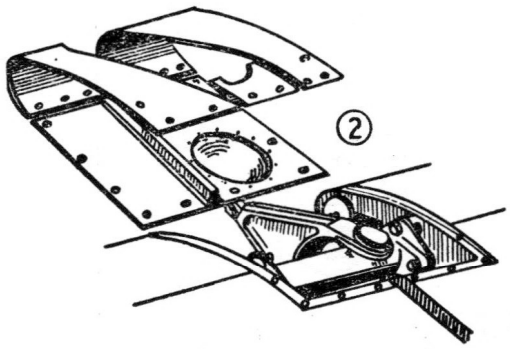

DETACHABLE COVER AT JOINT

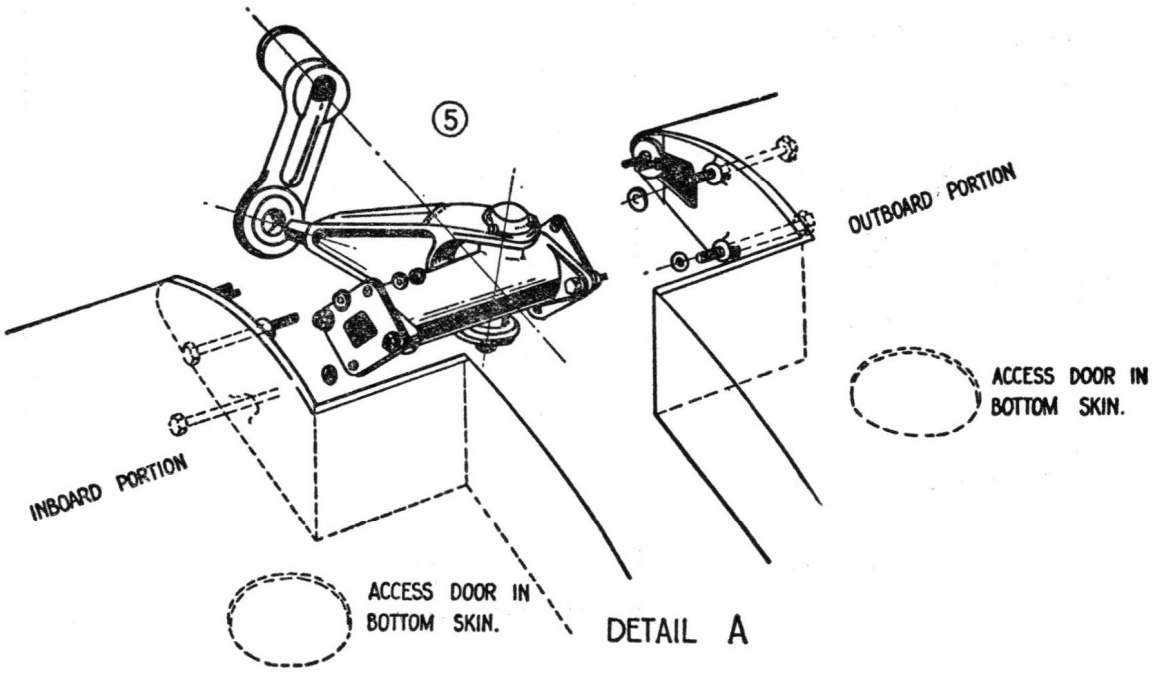

DETAIL A

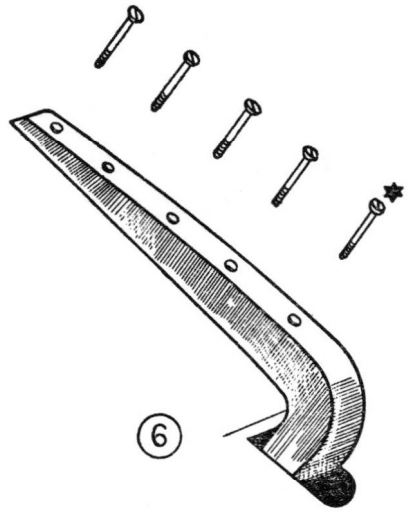

DETAIL B

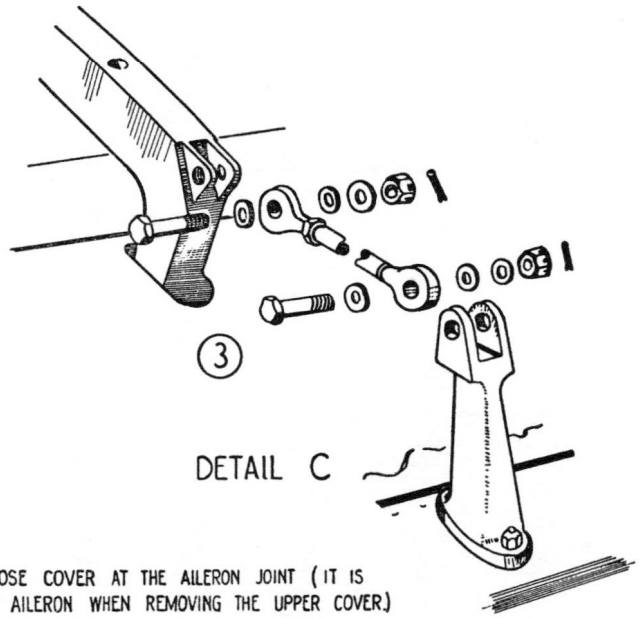

DETAIL C

1. LOWER THE FLAPS.
* 2. REMOVE THE DETACHABLE NOSE COVER AT THE AILERON JOINT (IT IS NECESSARY TO ELEVATE THE AILERON WHEN REMOVING THE UPPER COVER.)
* 3. REMOVE THE BALANCE TAB OPERATING ROD BY DISCONNECTING AT THE AILERON HINGE AND LEVER.
4. DISCONNECT THE AILERON TRIMMING TAB OPERATING CABLES AT THE TURNBUCKLES. RELEASE THE FAIRLEADS AND WITHDRAW THE CABLES FROM THE INNER AND OUTER TRAILING EDGES. SEE FIG.
* 5 REMOVE THE FULCRUM FORGING AND OPERATING LEVER. ACCESS TO THE BOLT HEADS SECURING THE FULCRUM TO THE AILERON NOSE FORGINGS IS THROUGH THE DETACHABLE DOORS IN THE BOTTOM SKIN OF THE AILERON. WITHDRAW THESE BOLTS AND LOWER THE FULCRUM AND LEVER.
* 6 SUPPORT THE INBOARD AND OUTBOARD PORTIONS OF THE AILERON, REMOVE THE SECURING BOLTS FROM THE HINGE BRACKETS AND RELEASE THE BONDING CONNECTION AT THE TRAILING EDGE RIB 14 REMOVE THE TWO PARTS OF THE AILERON.

NOTE :—
WHEN RE-ASSEMBLING THE AILERON OPERATING GEAR IT IS ESSENTIAL TO ENSURE THAT THE CENTRE LINE OF THE TORQUE TUBE IS IN LINE WITH THE INTERSECTING POINT OF THE CENTRE LINES OF THE FULCRUM FORGING AND THE BOLT ATTACHING THE OPERATING FORK TO THE FULCRUM. LATERAL ADJUSTMENT OF THE FULCRUM FORGING CAN BE MADE BY BUILDING UP OR REDUCING THE LAMINATED PACKING WASHERS ON THE BOLTS SECURING IT TO THE NOSE FORGING.

✱ THIS BOLT MAY BE SHORTENED TO CLEAR THE SHROUD IF NECESSARY, BUT MUST PROJECT THROUGH ANCHOR NUT.

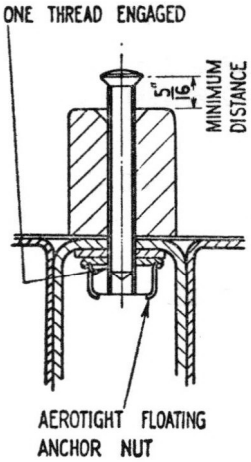

INSPECTION OF AILERON HINGE ARM BOLTS

METHOD OF DETERMINING THE SAFETY AND ENGAGEMENT OF AILERON HINGE ARM BOLTS ON THE FINAL ASSEMBLY OF THE HINGE ARMS TO THE TRAILING EDGES AFTER ALL ADJUSTMENTS HAVE BEEN MADE IN FITTING THE AILERON.

i PLACE THE BOLT IN THE HOLE AND PRESS IT DOWN TO THE ANCHOR NUT.
ii TURN THE BOLT ROUND ONCE TO ENGAGE ONE THREAD.
iii LIFT THE BOLT TO CHECK ENGAGEMENT OF THREAD AND TO DRAW THE ANCHOR NUT UP TO ITS CASE.
iv MEASURE THE DISTANCE FROM THE TOP OF THE C'SINK. ON THE BOLT TO THE TOP OF THE C'SINK. IN THE HOLE (SEE SKETCH)
IF THIS DISTANCE IS LESS THAN $\frac{5}{16}$" A LONGER BOLT IS NECESSARY TO ENSURE SAFETY.

NOTE:—
$\frac{5}{16}$" IS APPROX. LENGTH OF THREAD ON CROSS SECTION OF NUT.

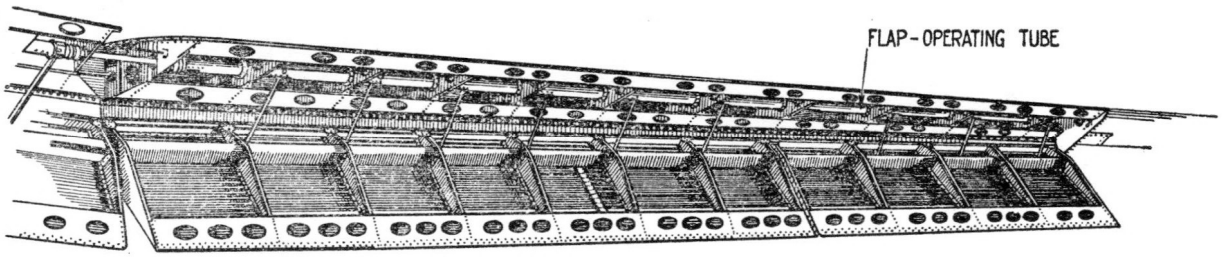

OUTER FLAP

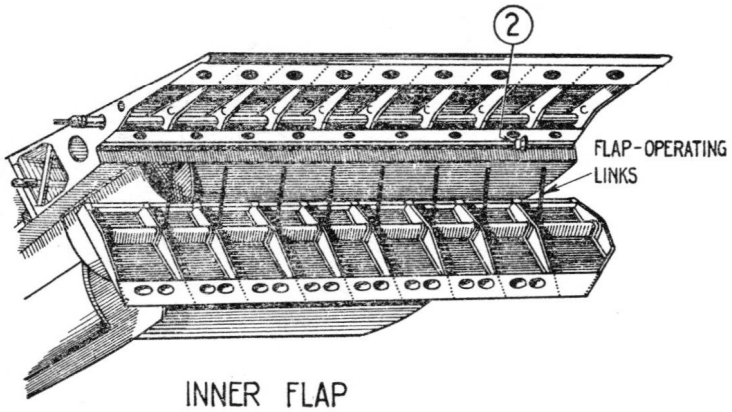

INNER FLAP

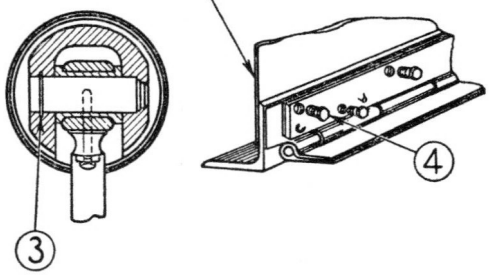

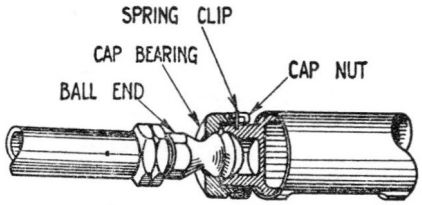

DETAIL OF UNIVERSAL JOINT

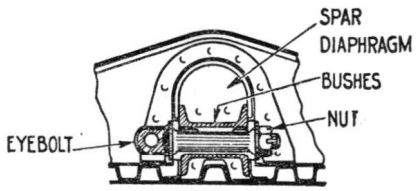

DETAIL OF LINK CONNECTION
AT FLAP SPAR

1 LOWER FLAPS.

* 2 DISCONNECT OPERATING ROD BETWEEN TRANSMITTER AND FLAP (PORT INNER FLAP ONLY.)

* 3 DISCONNECT LINKS AT FLAP-OPERATING TUBE AS FOLLOWS : REMOVE CIRCLIPS, USING CIRCLIP PLIERS. SCREW A $\frac{1}{4}$ IN. BOLT INTO END OF PIN AND WITHDRAW PIN.

* 4 REMOVE BOLTS SECURING FLAP HINGE TO MAIN PLANE FALSE SPAR.

5 LOWER FLAP FROM MAIN PLANE.

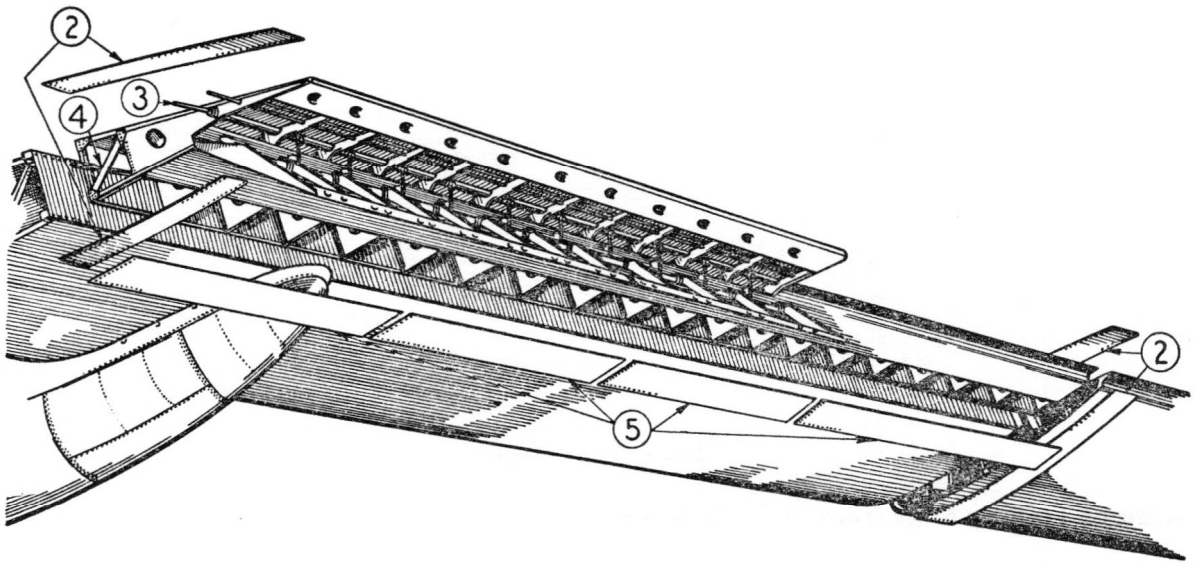

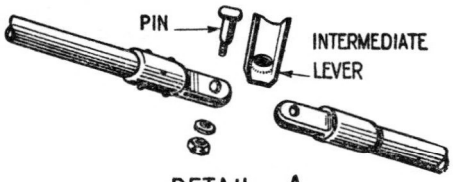

DETAIL A

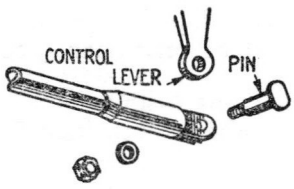

DETAIL B

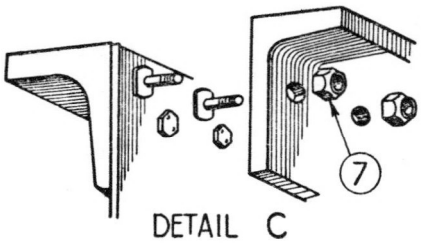

DETAIL C

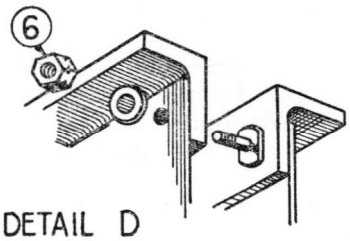

DETAIL D

1 REMOVE THE AILERON (SEE FIG 24 & 25)

*2 REMOVE THE FAIRING STRIPS (SEE FIG 4)

*3 DISCONNECT THE JOINT IN THE FLAP-OPERATING TUBE (SEE FIG. 26)

*4. DISCONNECT THE AILERON CONTROL ROD & REMOVE THE BOLT AT THE OUTBOARD END JOINT WITH AILERON LEVER (SEE DETAILS A & B)

*5 REMOVE THE ACCESS PANELS ON THE UNDERSIDE OF THE PLANE (SEE FIG. 4)

*6 REMOVE THE NUTS FROM THE STUDS WHICH SECURE RIBS 18 & 19 (SEE DETAIL D)

*7. SUPPORT THE TRAILING EDGE & REMOVE THE NUTS FROM THE STUDS ATTACHING THE TRAILING EDGE TO THE REAR SPAR (SEE DETAIL C) DRAW THE TRAILING EDGE FROM THE STUDS & LOWER IT FROM THE PLANE.

27	TRAILING EDGE-INTERMEDIATE PLANE	27

KEY TO FIG. 28

To Remove Trailing Edge from Main Plane:—

*(1) Remove top and bottom trailing edge fairing strips along fuselage side and trailing edge.

(2) Remove flap jack covers in fuselage, just aft of rear spar (see Fig. 43).

(3) Support flaps and disconnect flap-operating tube at flap jack (see Fig. 43).

(4) Lower flaps fully.

*(5) Remove top and bottom fairing strips between centre and intermediate plane trailing edges.

*(6) Disconnect joint in flap-operating tube at junction of centre plane and intermediate plane.

*(7) Remove access doors in bulkhead at rear end of main wheel compartment and remove bolts securing rear ends of main wheel door hinge beams.

*(8) Support rear fixed section of inboard nacelle and remove screws securing it to underside of main plane trailing edge.

*(9) Remove assembly panels on underside of trailing-edge section, just aft of rear spar (see Fig. 4).

*(10) Disconnect flap indicator electric cable (port side only).

(11) Disconnect dinghy manual release cable and electrical release cable (starboard only).

*(12) Disconnect aileron operating push-pull rod at intermediate lever on outer end of centre plane rear spar, and at joint inside inboard end of trailing edge (see details A and B).

*(13) Disconnect aileron trimming tab operating cables at turnbuckles, release fairleads and withdraw cables from inboard trailing edge (see details C and D).

*(14) Support trailing edge and remove nuts securing trailing-edge spar to rear spar of centre plane (see detail E).

(15) Carefully draw trailing edge aft from centre plane and then lower outer end so that trailing edge can be drawn outward to clear projection of aileron push-pull control rod.

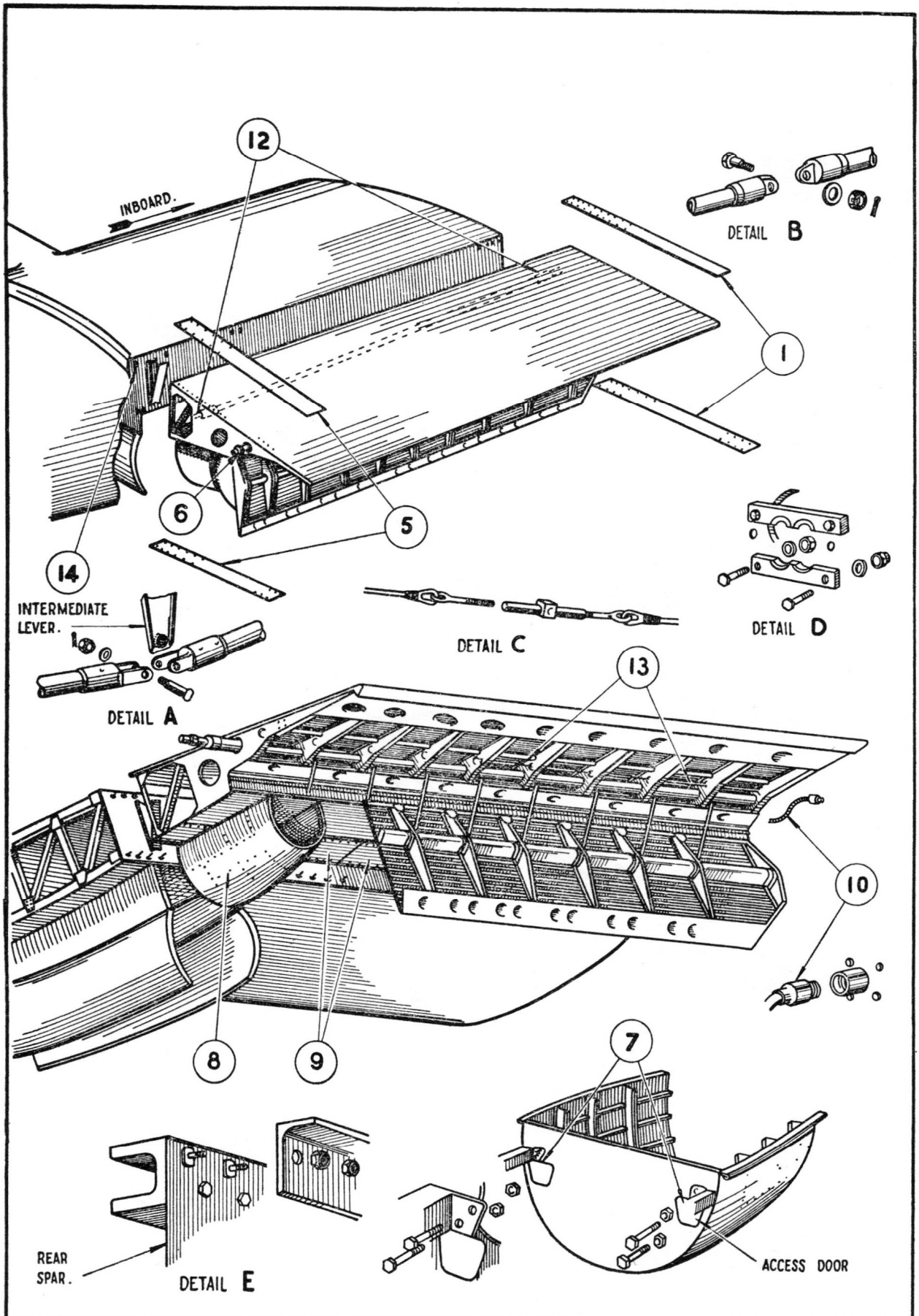

28	TRAILING EDGE - CENTRE PLANE	28

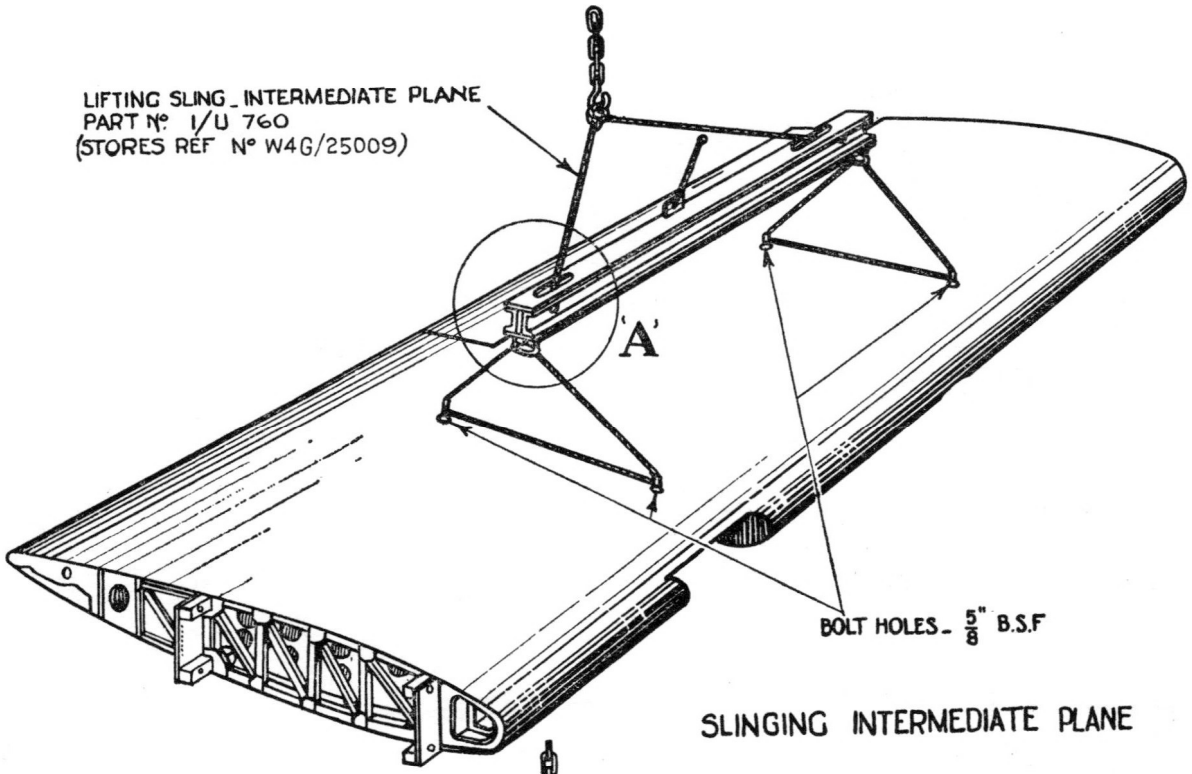

SLINGING INTERMEDIATE PLANE

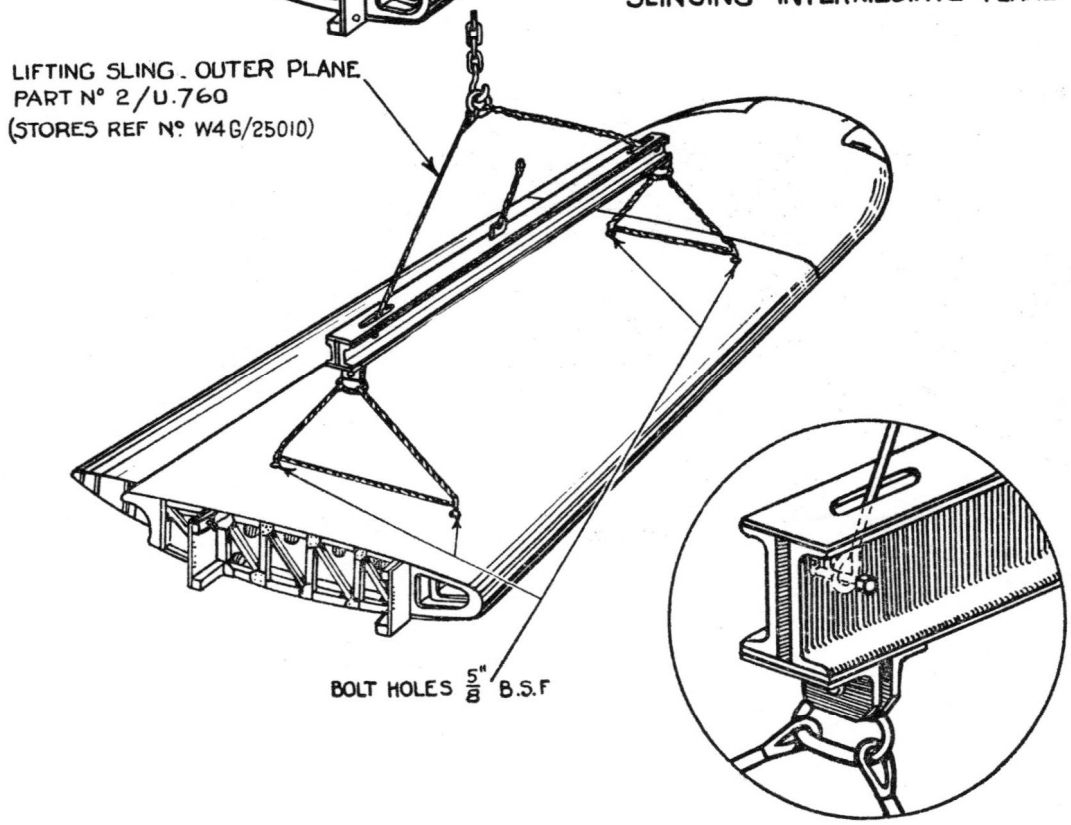

SLINGING OUTER PLANE

ENLARGED VIEW AT 'A'

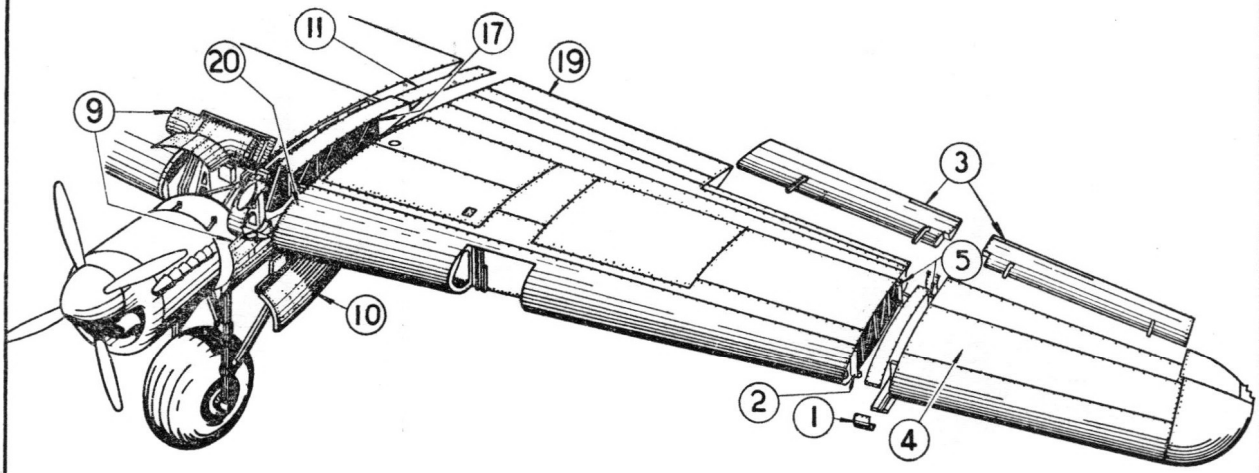

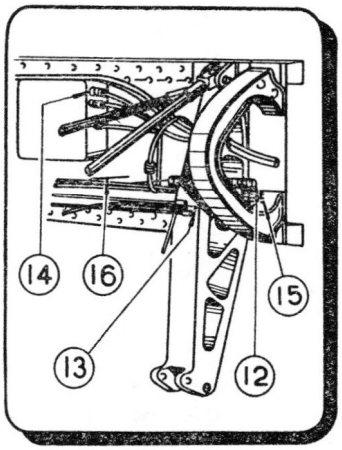

*1. REMOVE JOINT COVER PLATES AT JUNCTION OF INTERMEDIATE PLANE & OUTER PLANE - SEE FIG. 4.

*2 DISCONNECT ELECTRICAL CABLE TO NAVIGATION & RESIN LAMPS

*3. DISCONNECT AND REMOVE AILERON OPERATING GEAR ALSO INBOARD & OUTBOARD PORTIONS OF AILERON - SEE FIG. 24.

*4. SLING OUTER PLANE FROM A CRANE SEE FIG. 29.

*5. REMOVE SPLIT PINS UNSCREW NUTS & DRIVE OUT BOOM JOINT PINS - REMOVE JOINT PLATE - SEE FIG. 33

6 LOWER THE OUTER PLANE.

7 REMOVE OUTBOARD POWER PLANT SEE FIG. 10.

8 REMOVE OUTBOARD ENGINE SUB-FRAME - SEE FIG. 17

*9 REMOVE INBOARD ENGINE FAIRING PANELS BETWEEN FIREWALL & FRONT SPAR

*10 REMOVE OUTBOARD UNDERCARRIAGE DOOR & VALANCE FAIRING SEE FIG 21

*11 REMOVE TRANSPORT JOINT COVER PANELS AT JUNCTION OF CENTRE SECTION & INTERMEDIATE PLANE - SEE FIG. 4

*12. DISCONNECT FUEL SUPPLY PIPE TO OUTBOARD ENGINE AT TRANSPORT JOINT.

*13. DISCONNECT PNEUMATIC BOOST & DOPER PIPES AT TRANSPORT JOINT.

*14 DISCONNECT ALL ELECTRICAL CONDUITS GOING OUTBOARD, AT THE JUNCTION BOX MOUNTED BETWEEN THE U/C BEAMS ON FRONT SPAR

*15 DISCONNECT OUTBOARD ENGINE CONTROL RODS AT TURNBUCKLES

*16 DISCONNECT OUTBOARD ENGINE BOOST CABLE AT THIMBLE ON FRONT SPAR BETWEEN U/C BEAMS WITHDRAW & COIL

*17. REMOVE SPLIT PIN & DISCONNECT AILERON PUSH-PULL CONTROL ROD AT INTERMEDIATE LEVER ON CENTRE SECTION REAR SPAR

18 DISCONNECT FLAP OPERATING TUBE - SEE FIG. 26

*19 SLING INTERMEDIATE PLANE FROM A CRANE. SEE FIG. 29

*20 REMOVE SPLIT PINS, UNSCREW NUTS & DRIVE OUT BOOM JOINT PINS - REMOVE JOINT PLATE - SEE FIG. 31 & 32.

21 LOWER INTERMEDIATE PLANE FROM AIRCRAFT.

30	INTERMEDIATE PLANE & OUTER PLANE	30

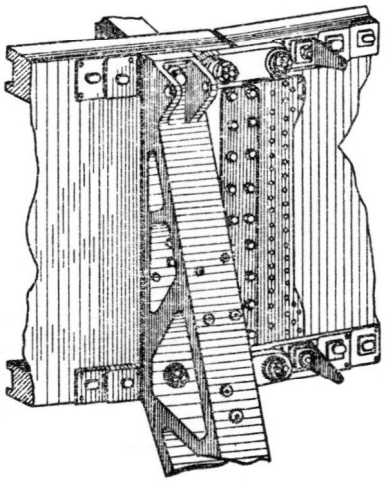

LOOKING AFT

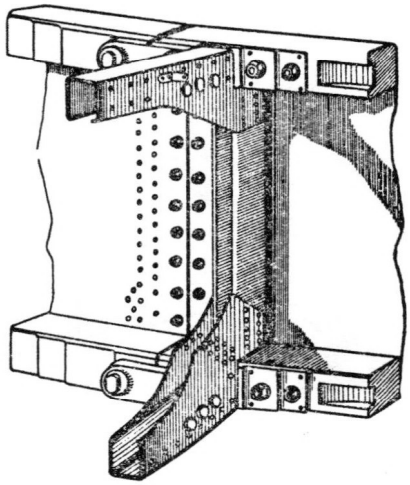

LOOKING FORWARD

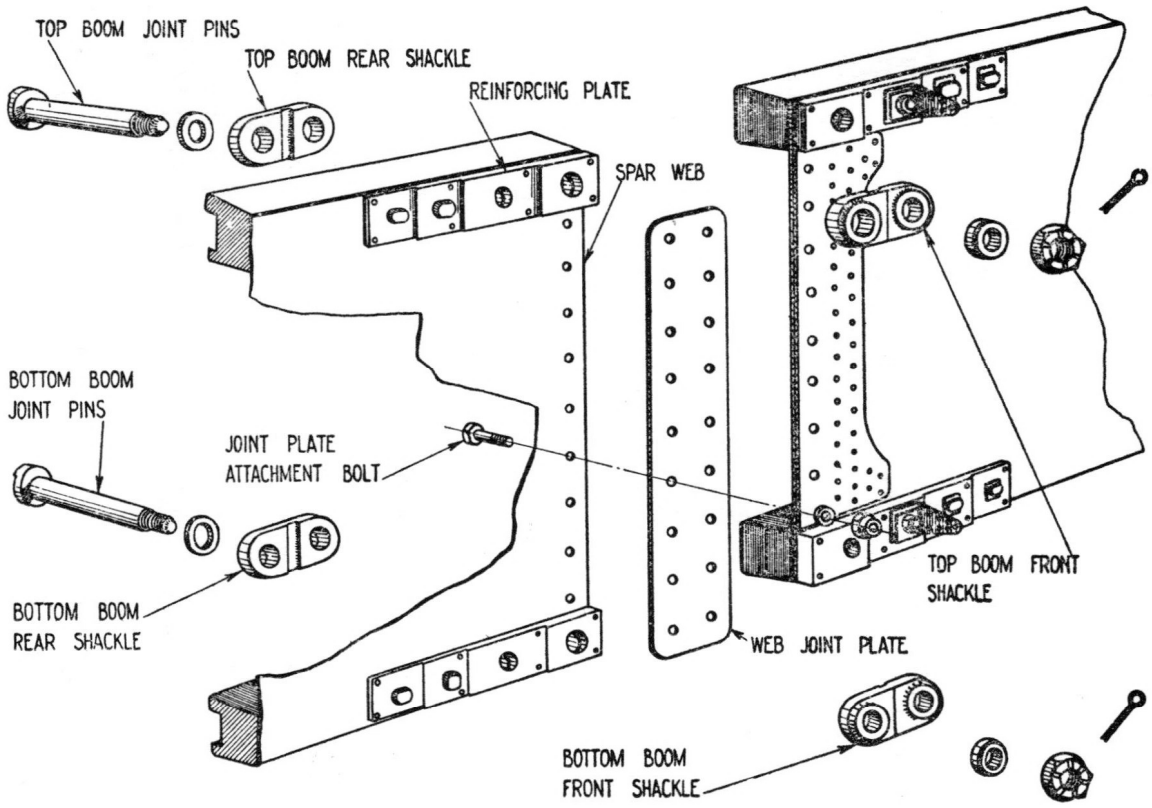

NOTE :–

USE SPANNERS PT Nº 1.Z.2877 (STORES REF. DIC/32155) FOR NUTS ON JOINT PINS

31	DETAIL OF FRONT SPAR JOINT INTERMEDIATE PLANE TO CENTRE PLANE	31

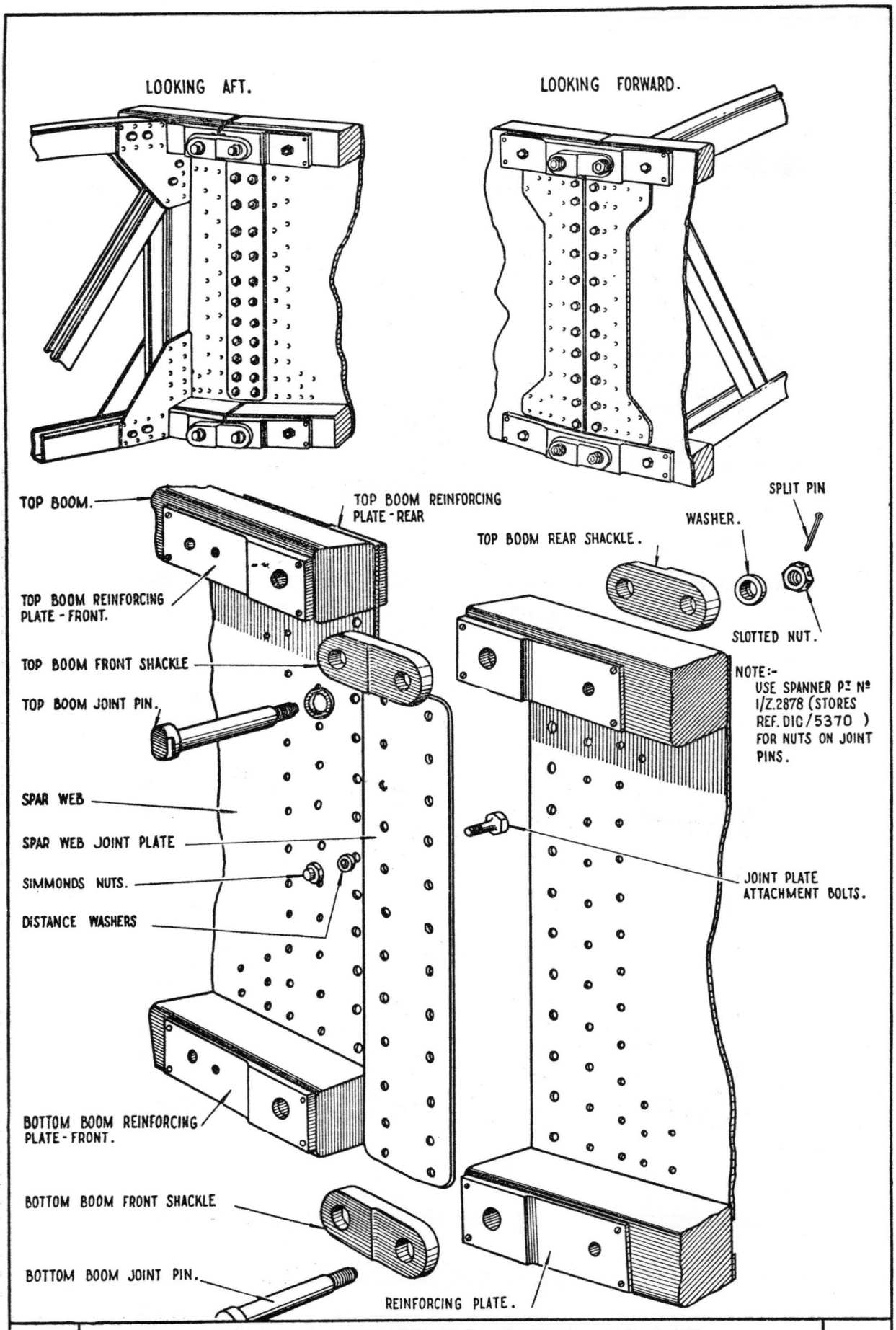

32	DETAIL OF REAR SPAR JOINT INTERMEDIATE PLANE TO CENTRE PLANE	32

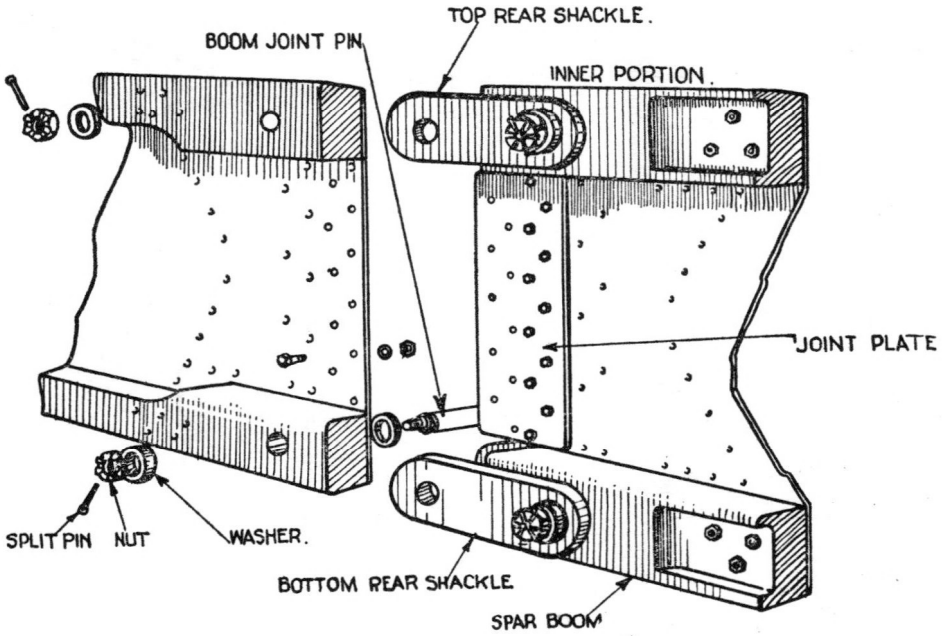

NOTE USE SPANNER PT Nº 1/Z 2502 (STORES REF. DIC/5366) FOR NUTS ON JOINT PINS

VIEW ON FRONT SPAR JOINT LOOKING FORWARD

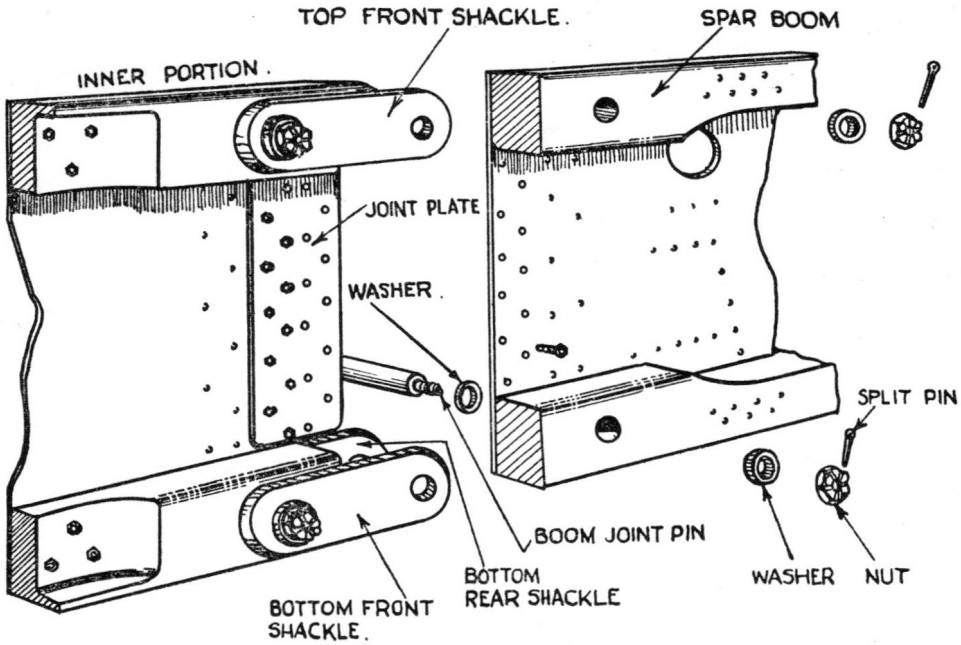

NOTE: USE SPANNER PT Nº 1/Z 2501 (STORES REF. DIC/5366) FOR NUTS ON JOINT PINS

VIEW ON REAR SPAR JOINT LOOKING AFT.

FRONT AND REAR SPAR JOINTS
OUTER PLANE TO INTERMEDIATE PLANE

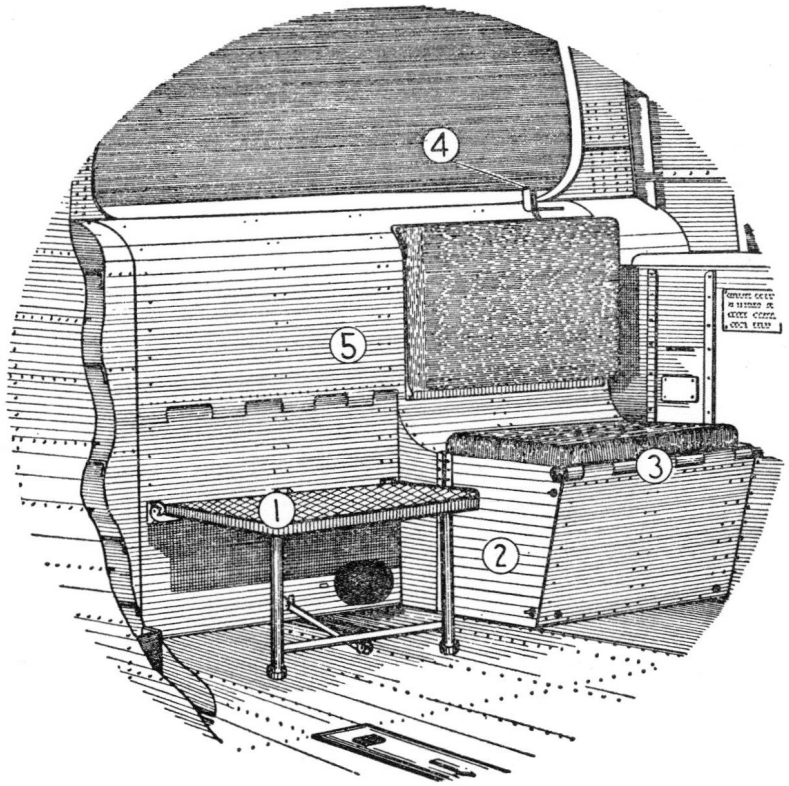

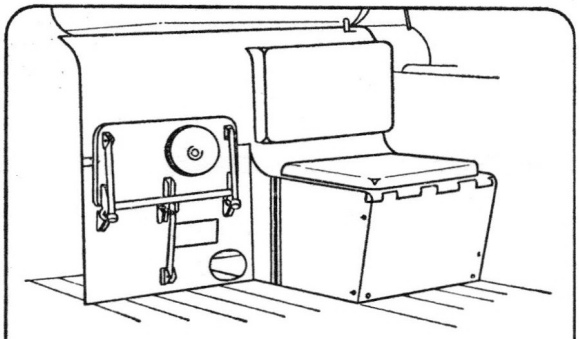

*1 FOLD UP THE STEP.

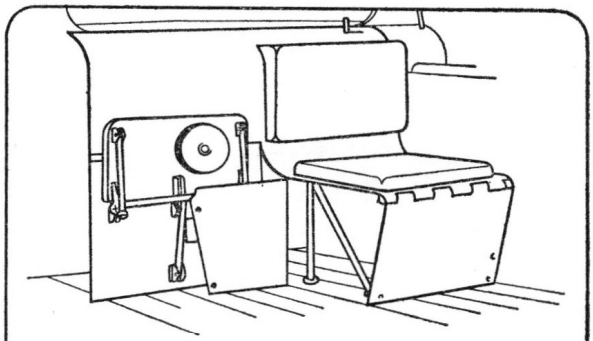

*2 RELEASE THE TWO FASTENERS ON THE SEAT SIDE PANEL AND FOLD SIDE PANEL BACK.

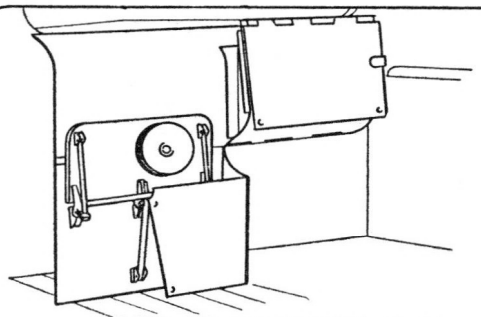

*3 RELEASE THE TWO FASTENERS AT THE BOTTOM OF THE SEAT FRONT PANEL. FOLD THE SEAT UP AND THE FRONT PANEL DOWN, SECURE WITH THE STRAP ATTACHED.

*4 PULL THE PROJECTING HANDLE OF THE SECURING BOLT TOWARDS THE PORT SIDE. THE BOLT MUST BE HELD BACK.

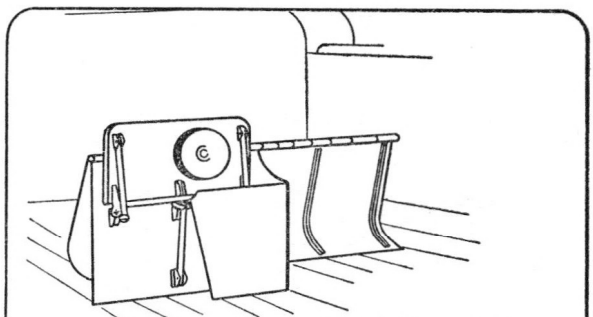

*5 LIFT THE COVER TO RELEASE THE FLOOR PEGS AND DRAW IT FORWARD FROM THE SPAR FOLD THE UPPER PORTION OF THE COVER BACKWARD AND DOWN TO THE FLOOR.

6 TO REMOVE EITHER PORT OR STARBOARD SIDE PANELS RELEASE TOP FASTENERS AND LIFT FROM THE FLOOR.

34	FRONT SPAR COVER	34

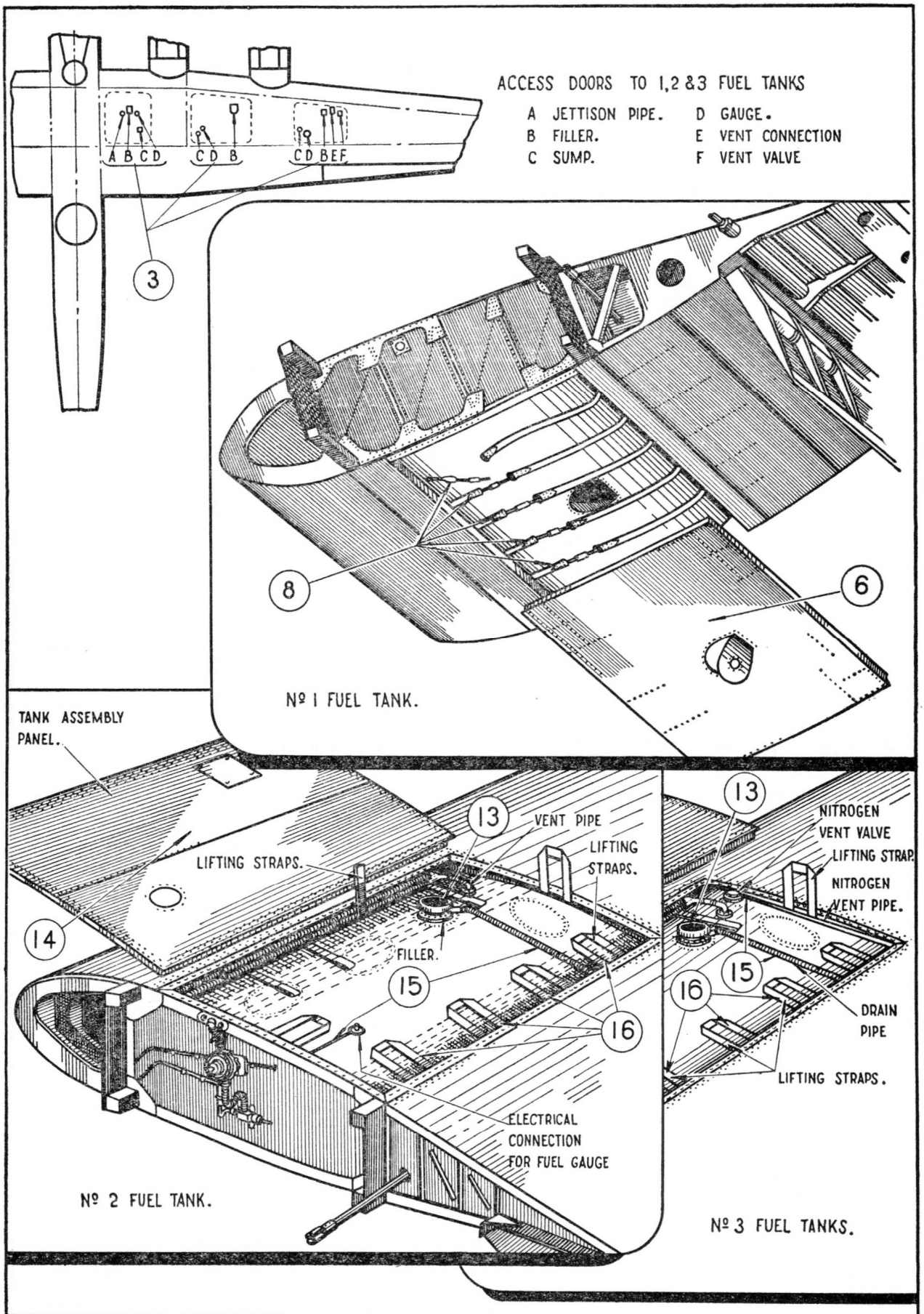
ACCESS DOORS TO 1,2 &3 FUEL TANKS
A JETTISON PIPE.
B FILLER.
C SUMP.
D GAUGE.
E VENT CONNECTION
F VENT VALVE
A B C D
C D B
C D B E F
3
8
6
Nº 1 FUEL TANK.
TANK ASSEMBLY PANEL.
13
VENT PIPE
LIFTING STRAPS.
LIFTING STRAPS.
14
FILLER.
15
16
ELECTRICAL CONNECTION FOR FUEL GAUGE
Nº 2 FUEL TANK.
13
NITROGEN VENT VALVE
LIFTING STRAP.
NITROGEN VENT PIPE.
15
16
DRAIN PIPE
LIFTING STRAPS.
Nº 3 FUEL TANKS.

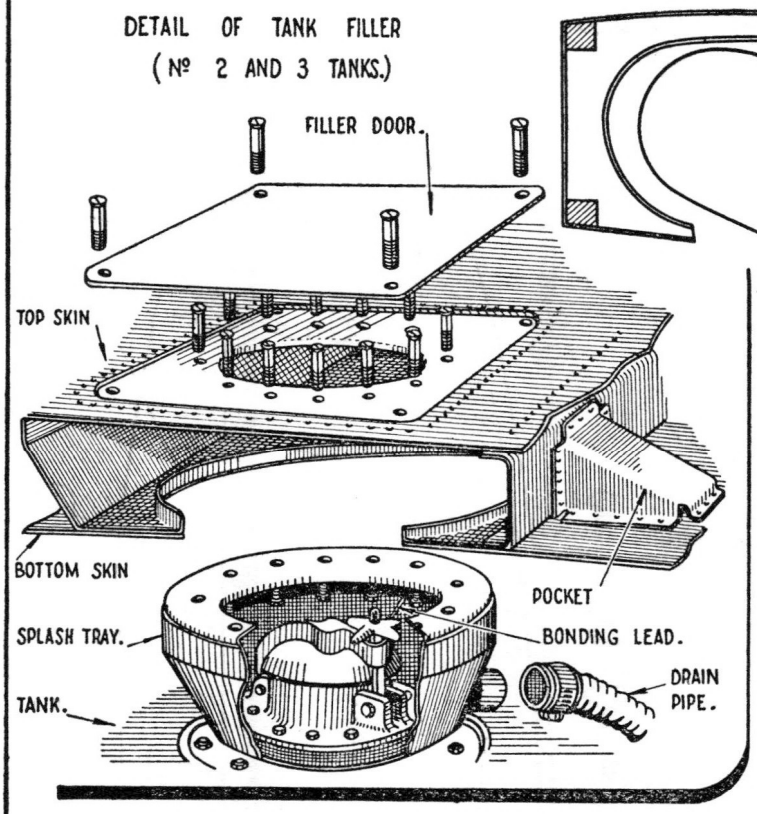

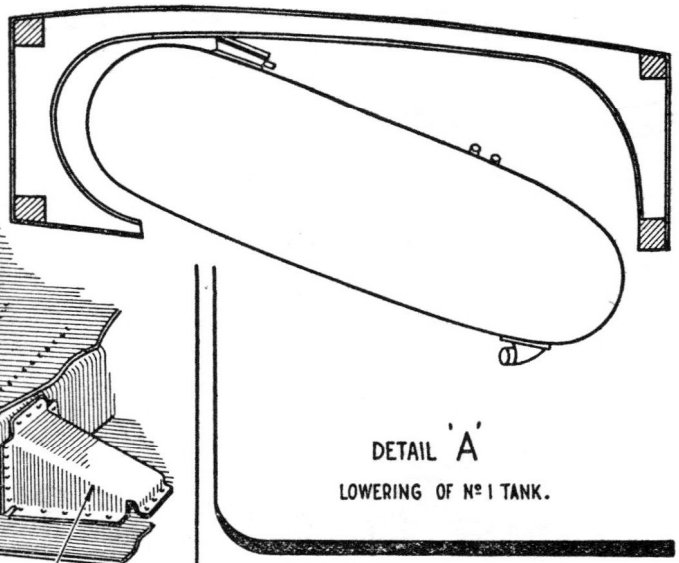

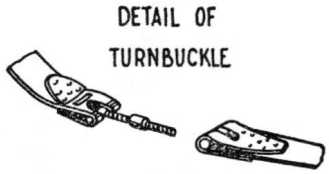

TANK Nº 1.

1 PLACE A SUITABLE PLATFORM BENEATH THE ASSEMBLY PANEL IN THE MAIN PLANE.

2 DRAIN OR PARTLY DRAIN THE FUEL SYSTEM AS REQUIRED (SEE SECT. 4 CHAP. 3)

* 3 REMOVE ACCESS DOORS IN UPPER SURFACE OF PLANE AND REMOVE FILLER CAP ASSEMBLY LEAVING SPLASH TRAY IN POSITION.

4 DISCONNECT ALL PIPES AND ELECTRICAL LEADS AT THE TOP OF THE TANK.

5 REMOVE THE NUT FROM THE END OF THE SPINDLE SECURING THE JETTISON PIPE DOOR TO THE UNDERSIDE OF THE MAIN PLANE.

* 6 REMOVE THE TANK ASSEMBLY PANEL FROM THE UNDERSIDE OF THE MAIN PLANE.

7 DISCONNECT THE DELIVERY PIPE AT THE CONNECTION TO THE TANK.

* 8 SUPPORT THE TANK AND UNSCREW THE TURNBUCKLE OF EACH STRAP.

9 LOWER THE REAR END OF TANK AND WITHDRAW IT FROM THE MAIN PLANE (SEE DETAIL 'A')

TANKS Nº 2 & 3.

10 DRAIN OR PARTLY DRAIN FUEL SYSTEM AS REQUIRED (SEE SECT. 4 CHAP. 3)

11 TAKE THE WEIGHT OF THE OUTBOARD ENGINE BY SLINGING AND TRESTLING.

12 REMOVE THE ACCESS DOOR UNDER THE MAIN PLANE AND DISCONNECT THE DELIVERY PIPE FROM THE TANK.

*13 REMOVE THE SCREWS SECURING THE SPLASH TRAY TO THE ACCESS PANEL AT THE FILLER CAP NOTE THAT THE BONDING LEAD MUST BE RECONNECTED ON RE-ASSEMBLY

*14 REMOVE THE SCREWS SECURING THE TANK ASSEMBLY PANEL AND LIFT AWAY THE PANEL. WHEN REPLACING A PANEL FIT AT LEAST TWO SCREWS AT DIAGONALLY OPPOSITE CORNERS AND CHECK ALIGNMENT OF SCREW HOLES IF NECESSARY RAISE OR LOWER THE ENGINE TO ENABLE THE SCREWS TO BE FITTED.

*15 DISCONNECT ALL PIPES AND ELECTRICAL LEADS AT THE TOP OF THE TANK.

*16 LIFT THE TANKS BY MEANS OF THE STRAPS AND REMOVE WITH GREAT CARE.

36	FUEL TANKS (2)	36

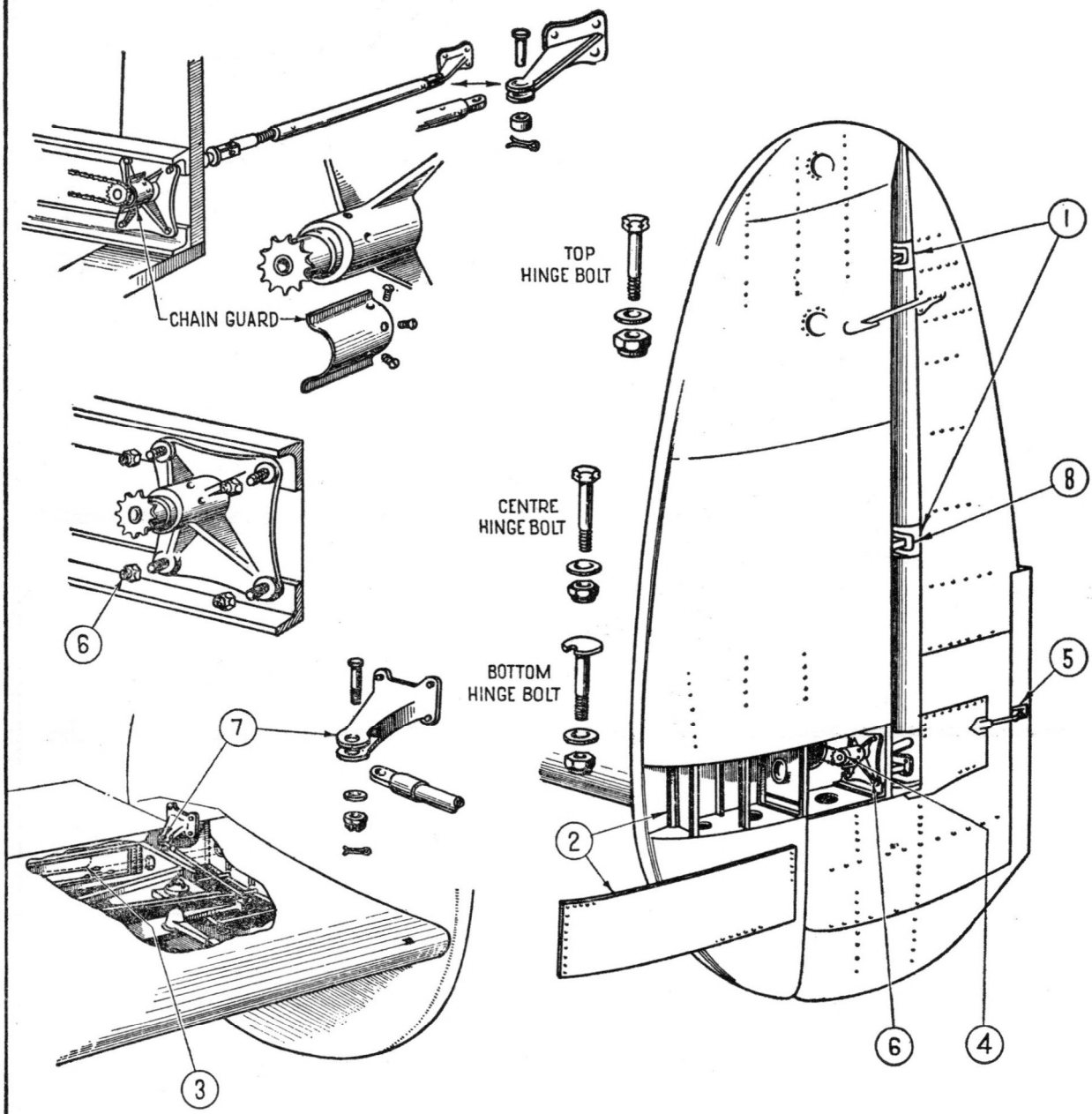

* 1 REMOVE THE THREE HINGE INSPECTION COVERS AT THE NOSE OF THE RUDDER.

* 2 REMOVE THE ACCESS PANEL ON THE OUTER FACE OF THE FIN BY REMOVING THE RIVETS - SEE FIG.4.

* 3 REMOVE THE ACCESS DOOR IN THE UPPER SURFACE OF THE TAILPLANE OUTER END.

* 4 DISCONNECT THE RUDDER TRIMMING TAB OPERATING CABLE. DETACH THE GUARD AND REMOVE THE CHAIN FROM THE SPROCKET IN THE FIN.

* 5 DISCONNECT THE TRIMMING TAB OPERATING ROD AT THE TAB, UNSCREW AND REMOVE (THE SPROCKET MUST BE PREVENTED FROM TURNING WHILE THE ROD IS UNSCREWED)

* 6 REMOVE THE NUTS SECURING THE SPROCKET BEARING HOUSING TO THE OUTER END OF THE TAILPLANE REAR SPAR, AND WITHDRAW THE HOUSING COMPLETE WITH THE UNIVERSAL JOINT AND THE SCREWED FORK-END

* 7 REMOVE THE BOLT SECURING THE RUDDER ACTUATING LEVER TO THE CONNECTING ROD IN THE TAILPLANE

* 8 SUPPORT THE RUDDER, REMOVE THE THREE HINGE BOLTS AND LOWER THE RUDDER FROM THE FIN

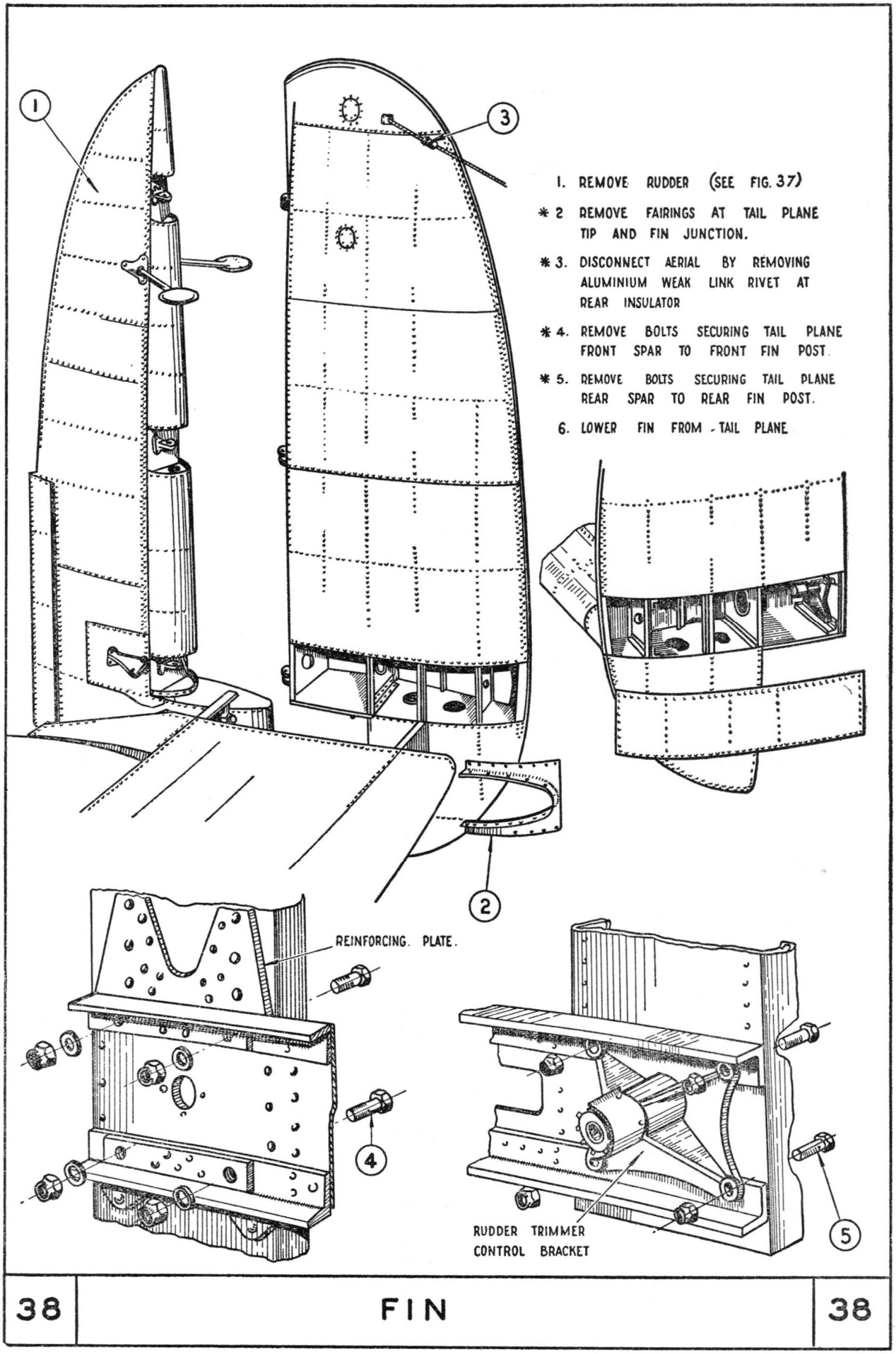
1. REMOVE RUDDER (SEE FIG. 37)
* 2 REMOVE FAIRINGS AT TAIL PLANE TIP AND FIN JUNCTION.
* 3. DISCONNECT AERIAL BY REMOVING ALUMINIUM WEAK LINK RIVET AT REAR INSULATOR
* 4. REMOVE BOLTS SECURING TAIL PLANE FRONT SPAR TO FRONT FIN POST.
* 5. REMOVE BOLTS SECURING TAIL PLANE REAR SPAR TO REAR FIN POST.
6. LOWER FIN FROM TAIL PLANE
1
2
3
4
5
REINFORCING PLATE.
RUDDER TRIMMER CONTROL BRACKET

38 FIN 38

KEY TO FIG. 39

*(1) Disconnect elevator control rod at torque shaft lever.

*(2) Remove bonding lead from torque shaft.

*(3) Disconnect coupling at each side of elevator torque shaft and remove centre portion of shaft.

*(4) Disconnect elevator trimming tab cable turnbuckle at centre of fuselage behind rear spar.

(5) Disconnect elevator trimming tab cables at turnbuckles forward of tail plane front spar.

*(6) Remove Vickers pulleys mounted at former 39.

*(7) Remove fairlead in fuselage side and pass cables through opening.

*(8) Remove access doors on top and bottom surfaces.

*(9) Remove three taper pins securing outer ends of elevator torque shaft to inner end of elevator spars and draw ends of torque shaft into fuselage.

*(10) Remove access doors in bottom surface of elevator just aft of hinges.

*(11) Support elevator, remove split pins and nuts from hinge bolts and draw elevator from tail plane.

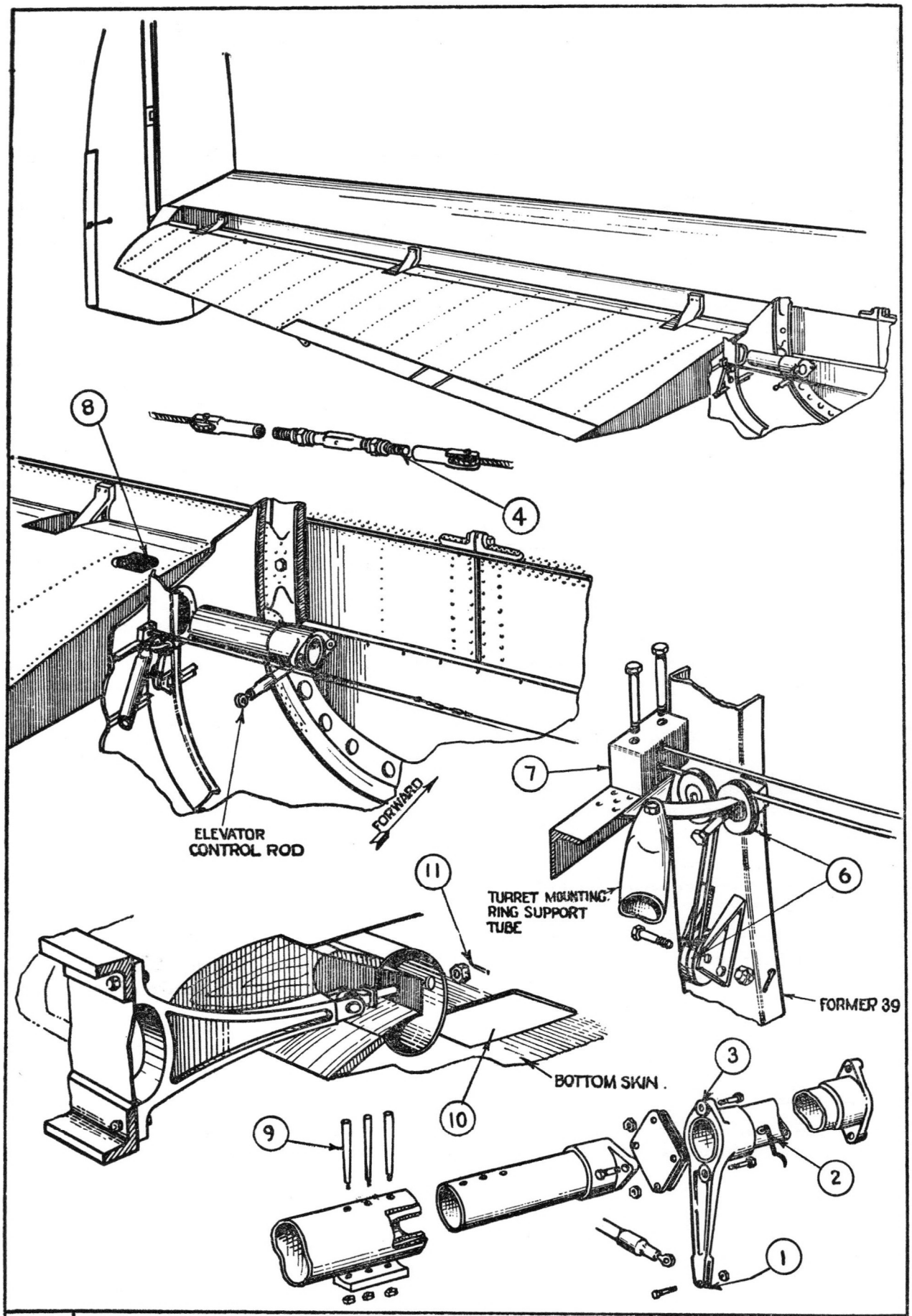

39	ELEVATOR	39

KEY TO FIG. 40

Trestle rear end of fuselage and:—

*(1) Remove all tail plane root fairings (see fig. 4).

(2) Disconnect aerial at top of each fin by removing aluminium "weak link" rivet at rear insulator.

(3) Disconnect aerial (if fitted) from tail plane.

*(4) Disconnect elevator control rod at torque shaft lever.

*(5) Disconnect couplings at each end of elevator torque shaft.

*(6) Remove three taper pins securing outer ends of elevator shaft to inner ends of elevator spars on side of fuselage, and draw ends of torque shaft into fuselage.

*(7) Remove bolts securing walkway across top of tail plane in centre of fuselage and securing walkway in rear end of fuselage to angle brackets on tail plane rear spar.

*(8) Remove four inspection panels on top surface of tail plane inside fuselage.

*(9) Disconnect and remove rod connecting rudder push-pull controls in fuselage to lever between tail plane spars.

*(10) Disconnect starboard rudder push-pull control at lever between tail plane spars in fuselage.

(11) Tie elevator and rudder trimming tab cables with string at control box in pilot's cockpit to prevent cables unwrapping over sides of drum.

(12) Disconnect elevator and rudder trimming tab control cables at turnbuckles on port side of fuselage forward of tail plane front spar.

(13) Remove fairleads on fuselage formers between turnbuckles and tail plane rear spar.

(14) Remove four Vickers pulleys between tail plane spars and draw rudder trimming tab cables into tail plane.

(15) Disconnect rudder trimming tab cable turnbuckle at centre of fuselage between tail plane spars.

(16) Disconnect elevator trimming tab cable turnbuckle at centre of fuselage aft of tail plane rear spar.

(17) Remove four Vickers pulleys at first former aft of tail plane rear spar and remove fairlead on each side of fuselage.

(18) Withdraw cables leading forward and pass them through sides of fuselage.

(19) Remove four bolts securing draught-proof plate to rear spar of tail plane.

(20) Detach canvas bulkhead below front spar of tail plane and remove fastener studs from spar.

*(21) Remove eight bolts securing tail wheel strut anchorage plate on top of tail plane.

*(22) Remove fibre packing blocks positioned between ends of fuselage formers, and at top and bottom skin of tail plane.

(23) Support tail plane at each side of fuselage on suitable trestles.

*(24) Remove attachment bolts at top and bottom joints at centre of tail plane.

*(25) Remove main attachment bolts securing tail plane front and rear spars to fuselage formers 35 and 38. Unscrew rear spar bolt bushes until flush with former. Withdraw tail plane horizontally from each side of fuselage. Care must be taken not to damage fuselage formers and trimming tab cables.

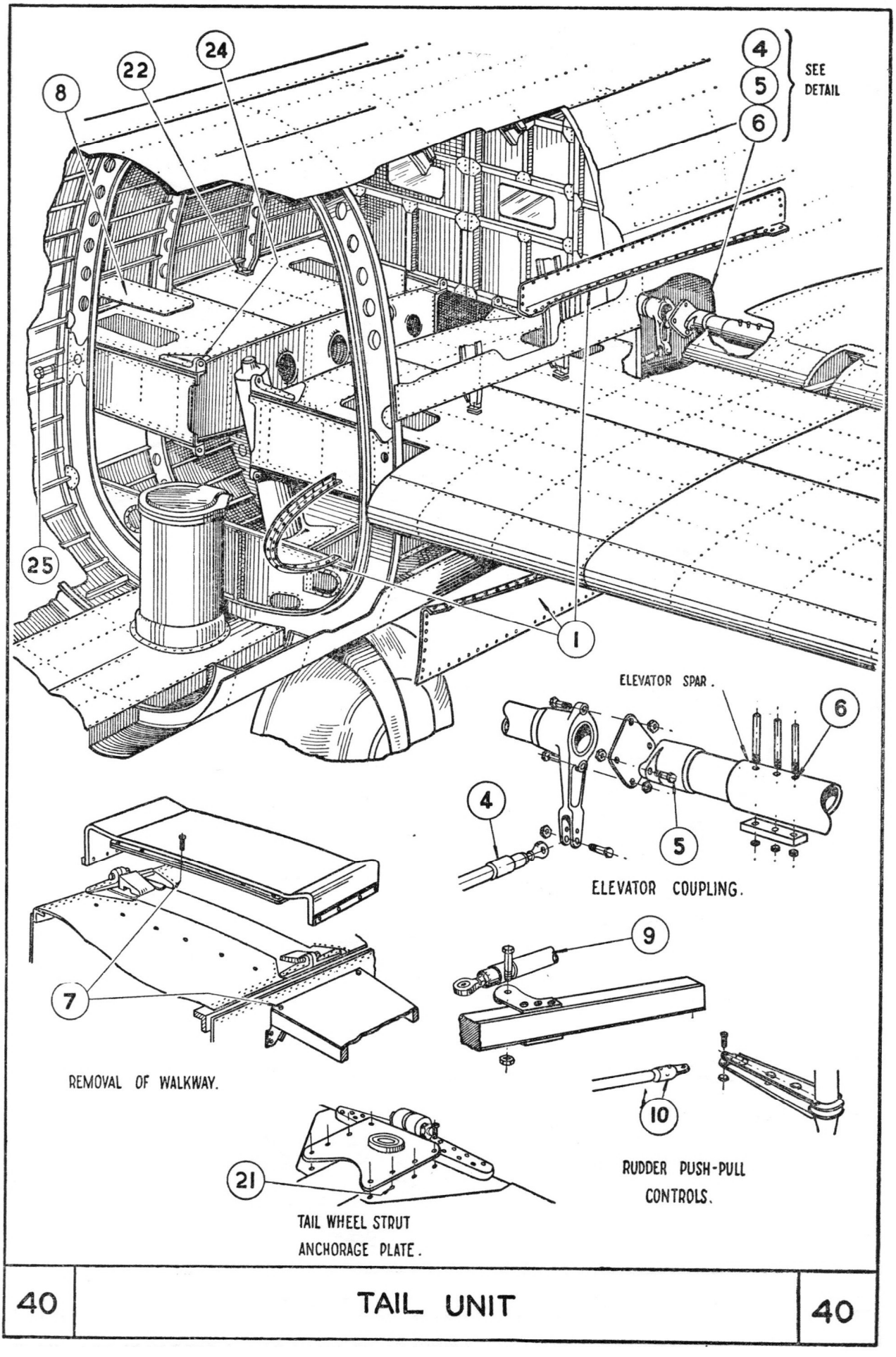

40	TAIL UNIT	40

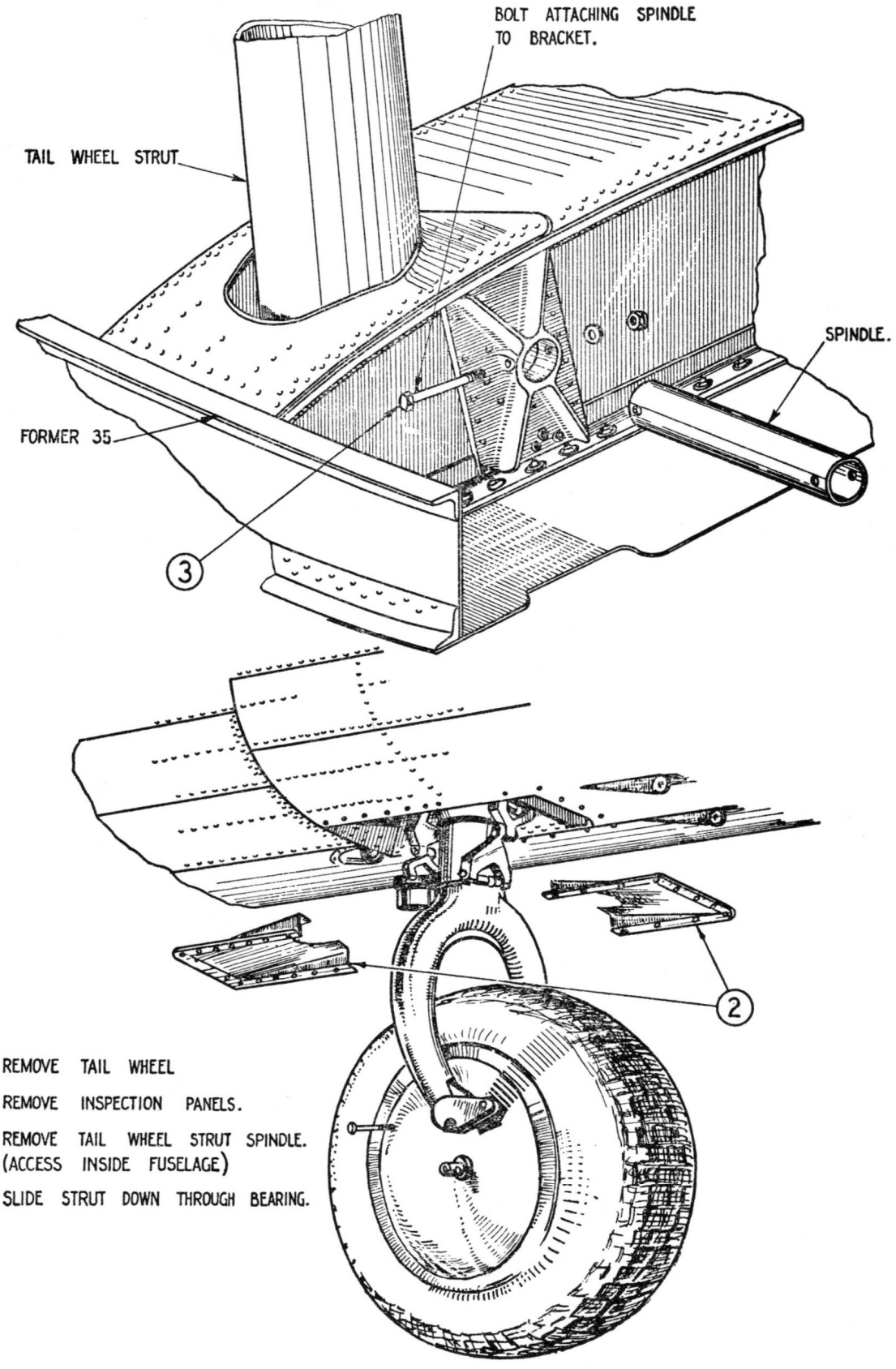

1 REMOVE TAIL WHEEL

*2 REMOVE INSPECTION PANELS.

*3 REMOVE TAIL WHEEL STRUT SPINDLE. (ACCESS INSIDE FUSELAGE)

4 SLIDE STRUT DOWN THROUGH BEARING.

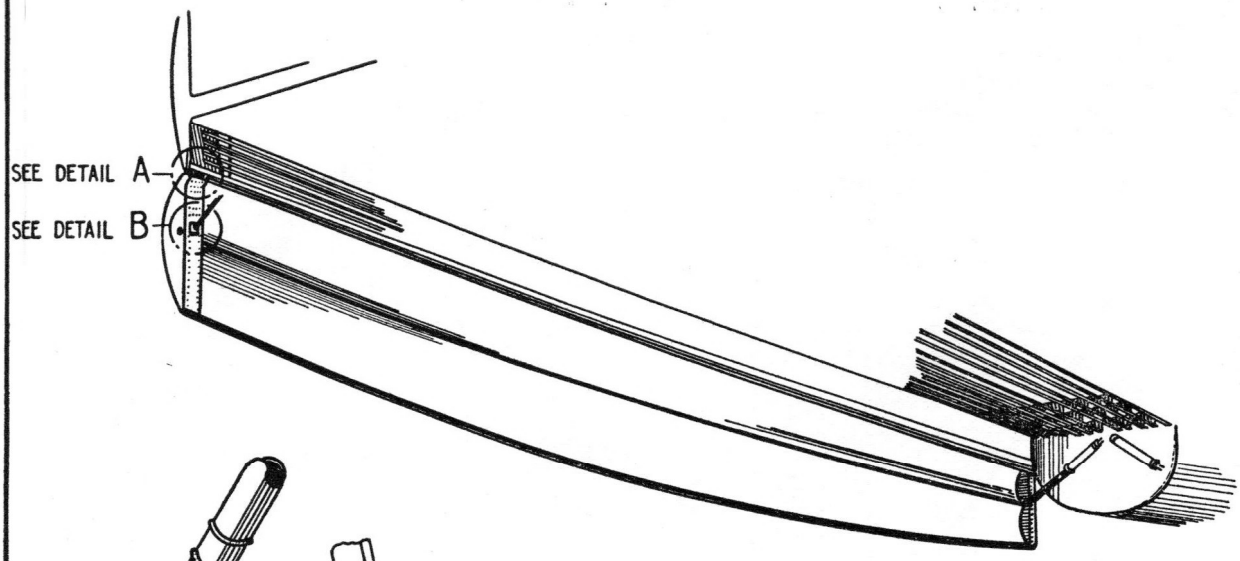

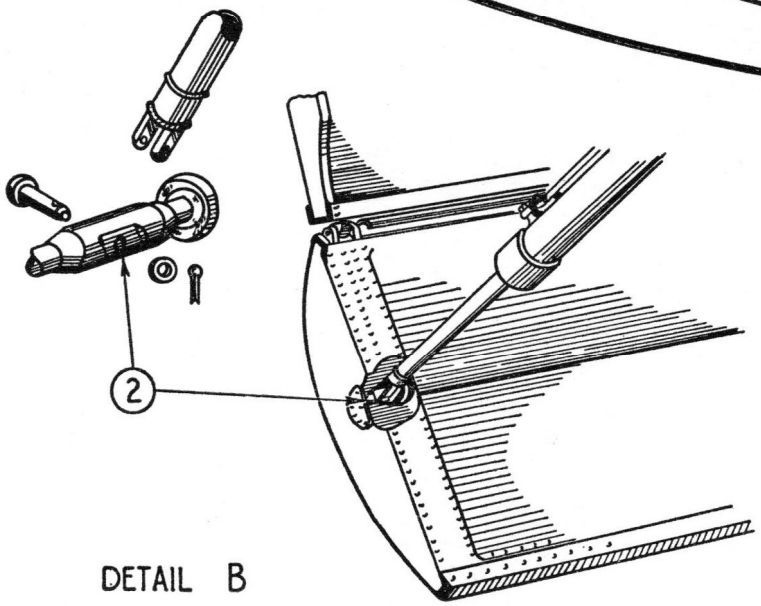

DETAIL B

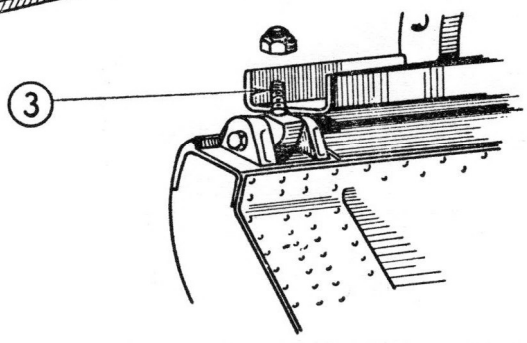

DETAIL A

TO REMOVE THE BOMB DOORS PROCEED AS FOLLOWS :—

1 OPEN THE BOMB DOORS BY SETTING THE LEVER BY THE PILOT'S SEAT TO "OPEN."

* 2 WITHDRAW THE PIN AT THE LOWER END OF THE HYDRAULIC JACKS AT EACH END OF THE DOORS.

* 3 SUPPORT THE BOMB DOOR AND REMOVE THE SIMMONDS NUTS FROM THE TOP HINGE EYEBOLTS SECURING THE BOMB DOOR TO THE FUSELAGE RAIL.

NOTE:— DO NOT TRY TO REMOVE THE HINGE PINS WITH THE DOOR IN POSITION.

42	BOMB DOORS	42

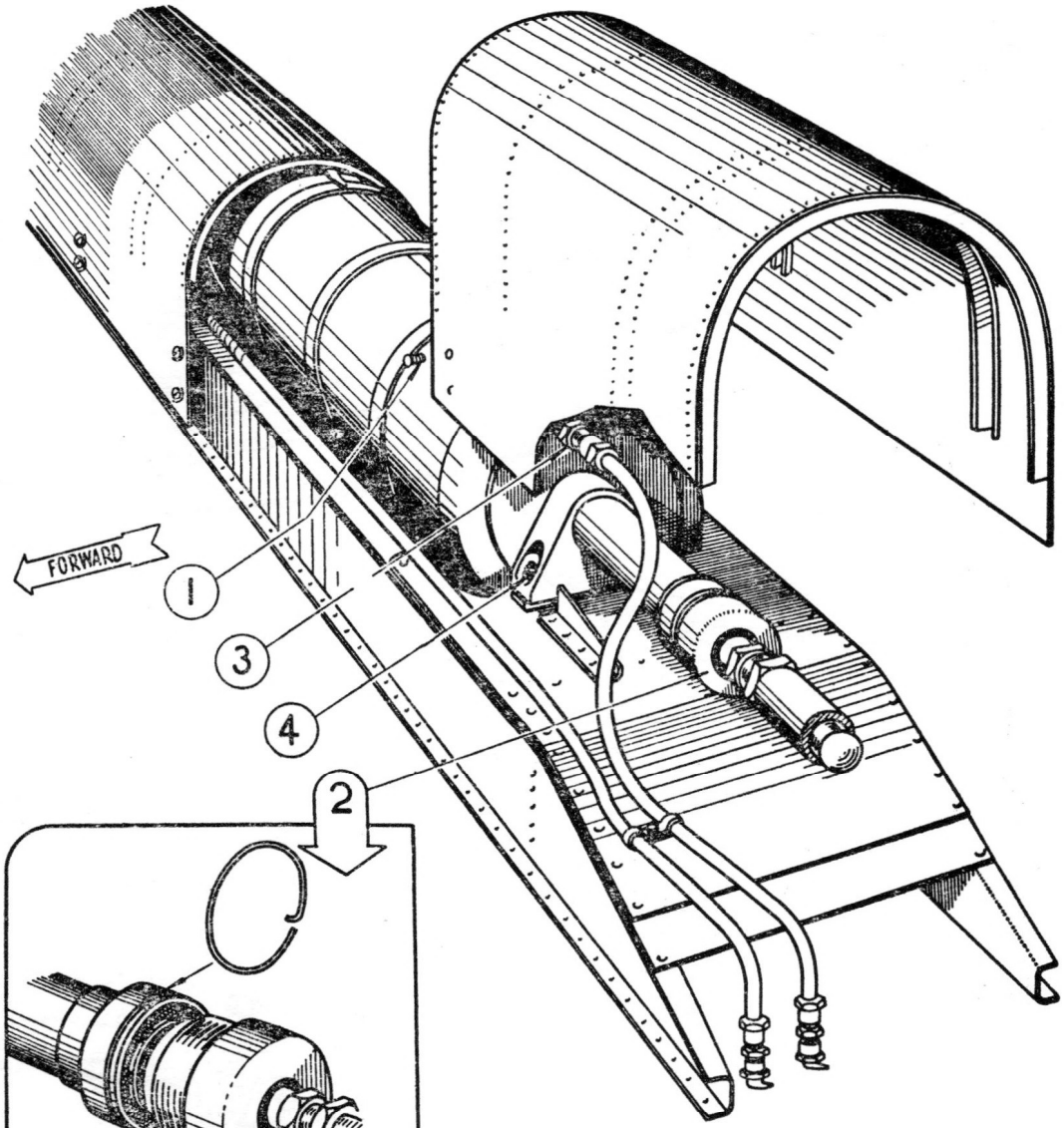

DETAIL OF
FLAP-OPERATING
TUBE CONNECTING LINKS

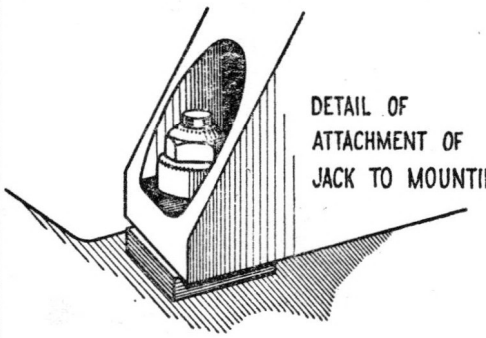

DETAIL OF
ATTACHMENT OF
JACK TO MOUNTING.

*1	REMOVE THE BOLTS SECURING THE COVERS TO THE JACK MOUNTING, LIFT OFF COVERS.
*2	DISCONNECT THE FLAP OPERATING TUBE CONNECTING LINKS - SEE DETAIL.
*3	DISCONNECT THE PIPE CONNECTIONS AT EACH END OF THE JACK.
*4	REMOVE FOUR NUTS SECURING THE ENDS OF THE JACK TO THE MOUNTING - SEE DETAIL.
5	RAISE THE JACK AND REMOVE FROM MOUNTING.

Section 6

Electrical & Radio Servicing

CHAPTER 1. ELECTRICAL SERVICING
CHAPTER 2. RADIO SERVICING.

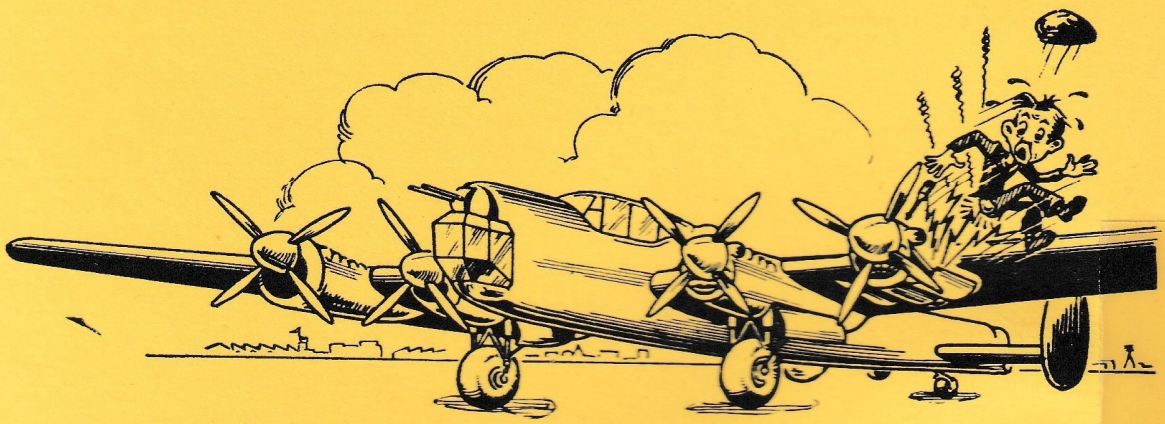

ISOLATE THE CIRCUIT YOU ARE WORKING ON,
BEFORE DISMANTLING ANY EQUIPMENT.

SECTION 6 — CHAPTER 1

Electrical Servicing

CONTENTS

	Para.
INTRODUCTION	1
INTERPRETATION OF DIAGRAMS —	
Location diagrams	3
Theoretical diagrams	4
Routing charts	5
Circuit diagrams	6
SYSTEM DETAILS —	
Access to components	7
Distribution boxes	8
Earth points	9
Harness	10
Terminal blocks	11
Circuit breakers and fuzes	12
Conduits and cables	13
Power supply	14
Voltage regulators	15
SERVICING NOTES —	
Supply and distribution	16
Radial feeder distribution	17
Engine starters	18
Propeller feathering	19
Ignition controls	20
Booster coils	21
Slow-running cut-off	22
Hot and cold air intake	23
Air cleaner controls	24
Radiator flap controls	25
Supercharger controls	26
Engine priming	27
Fuel pumps (pulsometer)	28
Fuel flowmeters	29
Fuel pressure warning lights	30
Oil pressure indicators	31
Undercarriage indicators and buzzer ...	32
Flap indicator	33
Oil temperature indicators	34
Radiator temperature indicators	35
Engine speed indicators	36
Fuel contents indicators	37
Fire extinguishers	38
Landing lamps	42
Navigation and head lamps	43
Resin and glider tug lamps	44
Identification lamps	45
Pilot's panel lamps	46
General lighting	47
Call lamps	48
Heated pressure head	49
Bomb slip heater supply	50
Heated clothing supply	51
Automatic pilot	52
Flare chute, Mk. III	53
Dinghy release	54
Mk. XIVA bomb sighting head supply ...	55
ARI. 5131 demolition	56
Front turret B.P. type F	57
Mid-upper turret type B. 17	58
Rear turret B.P. type D	59
Bomb gear	60
Plugs and sockets	61
Bonding and screening	62

ILLUSTRATIONS

	Code No.	Fig.
Location of electrical equipment		1
Location diagram — bomb fuzing and release		2
CIRCUIT DIAGRAMS		
Theoretical diagrams	—	3–13
Generator controls	A	14
Engine starter, booster and ignition	R & C	15
Propeller feathering	U	16
Fire extinguisher	M	17
Oil temperature thermometers	O.T.	18
Radiator temperature thermometers	R.T.	18
Oil pressure indicators	B	19
Fuel flowmeter indicators ...	Y	19
Air cleaner control	A.C.	20

ILLUSTRATIONS — (*continued*)

	Code No.	Fig.
Slow running cut-off control...	S.R.	20
Air intake control	H.C.	20
Radiator flaps	W	21
Supercharger control	B.C.	21
Fuel pressure warning	V	22
Engine speed indicators... ...	Z	23
Landing lamp	G	23
Fuel pumps	X	24
Fuel contents gauges	H	25
Undercarriage indicators ...	Q	26
Navigation, recognition and identification lamps...	E	27
Engine priming	E.P.	28
Heated pressure head	K	29
Dinghy release	L	29
Flap indicator	J	29
Bomb fuzing and release supply	T	29
Long range tanks — fuel contents gauges	H.L.	30
Long range tanks — fuel pumps	X.L.	30
Radial feeder distribution ...	—	31
Heated clothing socket... ...	H.E.	32
Scanner unit heaters	H.S.	32
Call lamps...	C.L.	33
General lighting	F	34
Bomb fuzing and release ...	T	35
Flare chute Mk. V	F.C.	36
Turret supplies and internal distribution	—	37
Camera supply and heating ...	P	38
D.R. compass	D.R.	39
A.M.U., A.P.I., G.P.I. and W.F.A.	G.P.	40,40A
W/T supplies and demolition...	W.D.	41
Rear turret supply (Boulton Paul type D) and internal distribution	—	42
L.T. and H.T. supply	D	43
Bomb sights and auto controls	I & S	43
Power supply of motor generator for scanning unit	M.G.	44

Electrical Servicing

Introduction

1. This section contains notes on general servicing and on access to electrical equipment, and diagrams of the electrical services presented in the form of routing charts. For a detailed description of standard items of equipment, reference should be made to the appropriate specialist Air Publications. For a description of the installation and services, see Section 10.

2. The wiring of this aircraft is single pole, earth return system. The wires are enclosed in conduits of polyvinyl flexible tubing—some of which are supported by troughs bolted to the aircraft structure with the exception of the following circuits which are screened by metal braided cables: inter-communication, and D.R. compass. Where it is necessary to break down conduits and cables, Breeze plugs and sockets, junction boxes or A.M. terminal blocks are provided.

INTERPRETATION OF DIAGRAMS

Location Diagrams

3. These diagrams show the position of each item of electrical equipment, including conduit runs, junction boxes and removable panels.

Theoretical Diagrams

4. These diagrams give a theoretical representation of the whole electrical system. The D.C. power is fed by radial feeders, each protected by a main circuit breaker. The various circuits are supplied through independent fuses from the radial feeders, and the negatives are connected to earth.

Routing Charts

5. The routing charts are laid out in tabular form, the first column on the left-hand side giving the title of the circuit, and further columns denote the distribution box, junction box, panel or item of equipment where breaks in the circuit occur. While all possible points for circuit breaks are given at the head of each column, only those appropriate to the individual circuits are marked. Where possible, the column heading gives the location of an item of equipment shown in that column. Further columns headed "Con. Ref." are placed beside the junction box columns to indicate conduit references and pin designations.

Circuit Diagrams

6. The figure and code numbers of each circuit diagram are contained in the contents page at the beginning of this chapter.

SYSTEM DETAILS

Access to Components

7. Where required, provision has been made to give access to items of electrical equipment. The leading edge of the main plane between the fuselage and the inboard engine is hinged to give access to the equipment forward of the front spar. The top rear fairing panel of the inboard nacelle is also hinged to the front spar. Equipment forward and aft of the firewalls can be reached by removal of the engine cowling panels. Reference should be made to Sect. 4, Chap. 3, for a diagrammatic view of the access to electrical components.

Distribution Boxes

8. The distribution boxes are 1DB, located on the starboard side of the fuselage, just forward of the front spar, 2DB, also on the starboard side adjacent to the pilot's instrument panel, and 3DB which is situated on the port side of the fuselage in the vicinity of the dorsal turret. All the fuses for the various circuits are distributed among the three distribution boxes, except for those which are located on the air-bomber's starboard panel. Reference should be made to Fig. 1 for the location of the distribution boxes, and junction boxes.

Earth Points

9. Earth points may be identified by a coating of oil-base blue paint, and these connections are situated at various positions in the fuselage and wings as follows:—

Starboard air-bomber's panel.
Port air-bomber's panel.
Nose turret terminal block.

2DB adjacent to panel.
Flight-engineer's panel.
Londex relay, and L.T. and H.T. power unit panel.
Navigator's panel.
1DB adjacent to panel.
2P, 3P and 8P.
Accumulators.
External supply socket.
Dorsal turret.
Under-defence gun panel.
3DB adjacent to panel.
Ammunition assister panel T.B. 117.

Fuselage, port and starboard:—

Undercarriage warning buzzer T.B. 17.
Tail turret, T.B. 119.
W/T. call lamp panel.
M/D. alternators at formers 18 and 19.
Tail turret earth lead.

Starboard wing:—

5P adjacent to panel } on front spar web.
7P adjacent to panel }
Wing tip T.B. 5 }

Port wing:—

4P adjacent to panel } on front spar web.
6P adjacent to panel }
Wing tip port T.B.1 }
Landing lamp T.B. 9 in leading edge.

Harness

10. For convenience and to facilitate replacement, the installation as a whole is divided up into groups of harnesses. A harness consists of the intermediate conduits connecting one or more panels or junction boxes. Attached to each conduit are one or more sockets.

Terminal Blocks

11. The terminal blocks, located and identified on various parts of the aircraft, are numbered and referenced on the appropriate routing chart.

Circuit Breakers and Fuses

12. Type A, circuit breakers are mounted on panels 2P and 3P and radial feeders are connected from these to banks of fuses in the distribution boxes and air bomber's panel. The circuit breakers are labelled 1D-1, 1D-2, 3D-1 and BA-1, etc., depending on which boxes they feed (see routing chart, Fig. 31), and connect to their respective fuse banks, as follows:—

1 D-1

AA1	Fire extinguisher warning lamps	P.O.	5A
AA2	Fuel flowmeter	P.O.	5A
AA3	D.R. compass		10A
AA4	Oil temperature thermometers	P.O.	5A
AA5	Demolition		20A
AA6	Undercarriage indicator and horn		10A
AA7	Radiator Temperature Thermometers	P.O.	5A
AA8	Fuel contents gauges	P.	5A
BB1	Oil pressure and fuel pressure	P.O.	5A
BB2	Fuel contents gauges (long range)		5A
BB3	Fuel pump No. 2	P.	20A
BB4	G.P.I. and A.M.U.		5A
BB5 } BB6 } BB7 }	Spares		
BB8	Radiator flaps	P.O.	5A

1 D-2

CC1	Fire extinguisher warning lamps	P.I.	5A
CC2	Fuel flowmeter	P.I.	5A
CC3	Radiator temperature thermometers	P.I.	5A
CC4	Spare		
CC5	Oil temperature thermometers	P.I.	5A
CC6	Oil pressure and fuel pressure	P.I.	5A
CC7	Fuel pump No. 1	P.	20A
CC8	Spare		
DD1	Pressure Head		10A
DD2 } DD3 }	Spares		
DD4	Radiator flaps	P.I.	5A

	1 D-3		
DD5	Fire extinguisher warning lamps	S.I.	5A
DD6	Fuel flowmeter	S.I.	5A
DD7	Radiator temperature thermometers	S.I.	5A
DD8	Oil temperature thermometers	S.I.	5A
EE1	General lighting		5A
EE2	Oil pressure and fuel pressure	S.I.	5A
EE3	Fuel pump No. 1	S.	20A
EE4	ARI. 5131 supply		20A
EE5 } EE6 } EE7 }	Spares		
EE8	Radiator flaps	S.I.	5A
	1 D-4		
FF1	Fire extinguisher warning	S.O.	5A
FF2	Fuel flowmeter	S.O.	5A
FF3	Spare		
FF4	Oil temperature thermometers	S.O.	5A
FF5	Oil pressure and fuel pressure	S.O.	5A
FF6	Fuel contents gauges	S.	5A
FF7	Fuel pump No. 2	S.	20A
FF8	T.R. 1196 supply		10A
GG1	L.T. supply		20A
GG2	H.T. supply		60A
GG3	Radiator temperature thermometers	S.O.	5A
GG4	Radiator flaps	S.O.	5A
	1 D-5		
GG5	ARI. 5083, 5559 and 5560		20A
GG6	General lighting		5A
GG7	Demolition		20A
GG8	Spare		
HH1	Fuel pump (long range) aft		20A
HH2	Fuel pump (long range) (forward)		20A
HH3	Flap indicator		5A
HH4	Spare		
	2 D-1		
JJ1	Spare		
JJ2	Spare		
JJ3	Spare		
JJ4	Automatic pilot		5A
JJ5	Call lamps		5A
JJ6	Fire extinguisher, inertia switch		20A
JJ7	Fire extinguisher bottles	P.O.	10A
JJ8	Fire extinguisher bottles	P.I.	10A
KK1	Propeller feathering	P.O.	10A
KK2	Propeller feathering	P.I.	10A
KK3 } KK4 }	Spares		
KK5	Exterior lamps		20A
KK6	General lighting		5A
KK7	Booster coils		10A
KK8	Slow running cut-off	P.O.	5A
LL1	Slow running cut-off	P.I.	5A
LL2 } LL3 } LL4 }	Spares		
PP1	Resin lamps		5A
PP2	Identification lamps		5A
PP3	Navigation lamps		5A
PP4	Landing lamp motor		5A

2 D-2

LL5	Slow running cut-off	S.I.	5A
LL6	Slow running cut-off	S.O.	5A
LL7	Spares		
LL8			
MM1	Engine starting		10A
MM2	Propeller feathering	S.I.	10A
MM3	Propeller feathering	S.O.	10A
MM4	Fire extinguisher bottles	S.I.	10A
MM5	Fire extinguisher bottles	S.O.	10A
MM6	Air cleaner control		5A
MM7	General lighting		5A
MM8	Hot-and-cold air intake		5A
NN1	Supercharger		5A
NN2	Engine priming		20A
NN3			
NN4			
NN5	Spares		
NN6			
NN7			
NN8	Landing lamp filament		20A

3 D-1

TT1	General lighting	5A
TT2	Under-defence gun	10A
TT3	Rear turret panel	5A
TT4	Scanner stabiliser	20A
TT 5	Scanner unit heaters	20A
TT6		
TT7	Spares	
TT8		
UU1		
UU2		
UU3		
UU4	Spares	
UU5		
UU6		
UU7		
UU8		

2 P

WW1	Warning light power supply	P.O.	5A
WW2	Warning light power supply	P.I.	5A
WW3	Londex relay	P.I.	5A
WW4	Londex relay	P.O.	5A

3 P

VV1	Voltmeter		5A
VV2	Motor driven alternator No. 1		5A
VV3	Motor driven alternator No. 2		5A
VV4	Mid turret circuit breaker No. 3		5A
VV5	Nose turret circuit breaker No. 4		5A
VV6	Warning light power supply	S.O.	5A
VV7	Warning lamps power supply	S.I.	5A
VV8	Londex relay	S.I.	5A
XX1	Londex relay	S.O.	5A
XX2	Supercharger controls	Port	10A
XX3	Supercharger controls	Stbd.	10A

B.A. - 1

RR1	Nose fuzing	20A
RR2	Tail fuzing	20A
RR3	Distributor heater	5A
RR4	Bomb slip heater	5A
RR5	Camera heater supply	10A
RR6	Auto-bomb sight, Mk. III	5A
RR7	Flare chute	10A
RR8	Camera supply	10A

B.A. - 2

SS1	Bomb sight supply, Mk. XIVA	5A
SS2	General lighting	5A
SS3	Heated clothing socket	10A
SS4	Dinghy	20A
SS5 } SS6 } SS7 | SS8]	Spares	

Conduits and Cables

13. The general service wiring is embraced in polyvinyl sheathing which is proof against water, fuel and oil. Each conduit is attached to a multi-pole plug at one end or to sockets embodied on junction boxes or panels. The other end may be:—

(i) Open if the conduit is to carry cables to individual equipment.

(ii) Fixed to another panel or junction box, when junction boxes or panels are inter-connected by the same conduit.

(iii) Fitted with separate plugs and sockets, when breaking down from fuselage conduits to main plane equipment. Each conduit will bear a reference number and letter indicating its relative position in the aircraft as follows:—

"F" for fuselage services.
"P" for port main plane and engine services.
"S" for starboard main plane and engine services.

Power Supply

14. The D.C. power supply is provided by four 30 volt, 6 kw. shunt-wound generators, mounted on the gear box of each engine, behind the firewall. The generators, which are connected in parallel, charge the four 12 volt, 40 A.h. accumulators (connected in series-parallel and situated immediately aft of the front spar in the fuselage) through four type X suppressors to prevent interference to radio services. The power failure warning lamps, mounted on 1DB, are connected through a pair of auxiliary contacts in the main circuit breaker, type "D", to earth. Should the generator fail, the type "J" cut-out will open the circuit, the "hold-in coil" breaking the main contacts so that the other generators or accumulator will light the warning lamps. The negative return is connected to the main aircraft structure by bolts. To maintain constant voltage over varying ranges of engine speed and load fluctuation, voltage regulators are connected in series with the shunt field of each generator. Four type 23 voltage regulators are connected in parallel from terminal 4 on each regulator to terminal 3 of the master voltage regulator, type 32. Four type "J" cut-outs, mounted respectively in panels 2P and 3P, are wired between the voltage regulators and generator circuit breakers. Depressing the re-set push switch will open-circuit the supply for the cut-out to the "hold-in coil" of the main circuit breaker, thus de-energizing the circuit breaker and disconnecting the generator supply from the general services. The cut-out remains entirely unaffected by this operation. The GROUND-FLIGHT switch, mounted on panel 3P on the starboard side of the fuselage centre section, and the external supply socket, mounted in the fuselage rear centre section, enable a ground battery to be plugged in for independent external electrical supply for engine starting, and for testing all other services. The supply is fed through a

number of radial feeders, each protected by its main circuit breaker. These are as follow: Five radial feeders to main distribution box (1DB) forward of front spar on starboard side; two radial feeders to distribution box (2DB) at pilot's instrument panel; one radial feeder to distribution box (3DB) in rear centre section on port side of fuselage, and two radial feeders to B/A panel.

Voltage Regulators

15. The following instructions should be followed for testing and setting the voltage regulators:—

(1) *Procedure Prior to Test*

(a) Short the master regulator by connection of terminal 3 to terminal 4 with a short length of unicel 7 or its equivalent.

(b) Check the re-set range mark of the master regulator.

(c) Set Ground-Flight switch to "Ground".

(d) Set generator control switch to "ON".

(e) Connect an accurate 0-40 scale voltmeter across terminal 2 of cut-out and earth connection.

(f) When engines are running switch off ground battery and switch on emergency switch on panel 1DB.

(2) *Setting*

(a) Check each type 23 regulator separately, running the respective engines at 2000 r.p.m. Should the controlled voltage exceed 23 volts, adjust the trimmer resistance embodied in the regulator until the correct setting of 23 volts is obtained.

(b) Increase the engine speed to between 2800 and 3000 r.p.m. and ensure that the voltage is maintained within ± .5 volts.

Note.—This voltage check is to be read under conditions of increasing engine speed only. Due to hysterisis effects, it is probable that the voltage recorded on reduction of engine speed to 2000 r.p.m. will be above 23 volts. This voltage may be between 23 and 23.5 volts.

(c) The above tests will be repeated for each engine separately.

(3) *Master Regulator*

(a) Before running generators in parallel, that is, with two or more engines running simultaneously, check the master regulator for mechanical setting, instructions for which are given outside the cover.

(b) Remove the shorting strip from terminals 3 and 4 of master regulator.

(c) Switch on both inboard generators.

(d) Set "Ground/Flight" switch to "GROUND" and ground batteries off.

(e) Set emergency switch to "ON".

(f) Connect voltmeter between terminal 2 of master regulator and earth connection.

(g) Run the two inboard engines at the same speed of 2000 r.p.m. and set voltage to 29 volts by means of trimmer resistance on master regulator.

(h) Each generator system should then be checked in turn by pressing the re-set switches and observing the voltage reading.

(j) The voltage on the complete system must be maintained within the limits of ± 0.5 volts.

Note.—Should any tendency to hunt be experienced, immediately shut down each generator in turn until hunting ceases. Any one generator system out of adjustment will cause the whole system to hunt. The type 23 regulator on the faulty system must be removed and replaced, it being inadvisable to try to correct the hunting on engine run-up.

Warning.—Should violent hunting set up during flight the generators should be immediately shut off in turn, leaving at least one satisfactory system in operation. Failure to do this may lead to a damaged gear box drive.

(4) *Checking Circulating Currents*

Place an insulating strip between the contacts of one circuit breaker and connect ammeter (10-0-10) across the circuit breaker contacts; run both engines with switches as for setting master regulator and check circulating currents, which should not exceed 10 amps. Pull-in voltage of cut-out under conditions of gradually increasing voltage should be between 26.5 and 27.0 volts.

SERVICING NOTES

Supply and Distribution

16. It is important that the GROUND/FLIGHT switch be put in the GROUND position when the aircraft is grounded, otherwise the circuits which have no switches would be a constant load on the accumulators.

Radial Feeder Distribution

17. Close each circuit breaker, type A, in turn and, with a 24 volt test lamp, check that supply is available at the fuse banks supplied by the appropriate circuit breaker (*see* paragraph 12).

Engine Starters

18. Double-pole push switches, mounted on the pilot's panel, control the starting system and energize the master relay as well as the appropriate starter relay solenoids, mounted inside the engine service junction boxes. Disconnect each starter motor and connect a 24 volt test lamp across the motor supply leads and earth. Press each starter button, then the lamp at the selected engine should light.

Propeller Feathering

19. This installation is of conventional design, with the addition of a master relay mounted on 3P controlling the heavy cables for starting and feathering. Disconnect the positive lead from each pump motor and connect a 24 volt test lamp between the lead and earth. Operate the corresponding feathering switch and note that this holds in and the lamp lights. Unscrew the plug to the hydromatic pressure switch mounted on the engine diaphragm, and ensure that the switch is automatically returned to the OFF position.

Ignition Controls

20. The magnetos are controlled through two sets of four switches, mounted in the top centre of the pilot's panel. The switches may be operated independently or in unison by means of the bridge plate. With a continuity tester, check between the pins and frame of each ignition socket at the engine bulkheads. From pin 1 of each socket, continuity should be gained through the port magneto switch, and pin 2, through the starboard magneto switch for each engine respectively.

Booster Coils

21. Four single-pole push-buttons mounted on the pilot's panel control the booster coils for each engine. When a button is pressed the booster coil in the selected engine can be heard vibrating.

Slow-running Cut-off

22. This is an electrically-controlled pneumatic system operated by switches mounted on the pilot's panel. Check that the pressure of the pneumatic system exceeds 160 lb. per sq. in. Press each switch in turn and check that the slow-running cut-off on the selected engine functions.

Hot and Cold Air Intake

23. This is an electrically-controlled pneumatic system. With the pneumatic system charged above 160 lb. per sq. in., note that the hot and cold air intake rams on all engines operate in synchronism with the operation of the switch mounted on the pilot's instrument panel.

Air Cleaner Controls

24. The air cleaner is always in operation when the aircraft is grounded and cannot be taken out of circuit. Check that the pneumatic system is charged above 160 lb. per sq. in. Select air cleaner OUT on the switch situated on the pilot's panel, and press the air cleaner micro-switch beside the port undercarriage UP catch. Check air cleaner rams on port engine and repeat the foregoing for starboard air cleaner rams.

Radiator Flap Controls

25. The radiator flaps are operated by electrically-controlled pneumatic rams, and automatic temperature control is obtained by a thermostat on each engine mounting frame. This thermostat may be cut out of the circuit by the manual operation of override switches mounted on the starboard side cockpit rail, the closing of these switches short circuiting the thermostat and opening the radiator shutters. A test button is mounted on each engine mounting frame to allow for a ground test to be carried out on individual engines. Check that the pneumatic pressure on the cockpit gauge exceeds 160 lb. per sq. in. and operate each override switch and test button in turn and note that these switches control the correct pneumatic rams. During the engine run, note that the operation of the radiator shutters takes place at a temperature corresponding to the limits indicated on the thermostatic switch.

Supercharger Controls

26. The supercharger control consists of a selector switch, and four warning lamps on the pilot's panel. The switch enables medium supercharge (M.S.) or automatic (AUTO) to be selected; in the automatic position, an altitude switch just forward of the engineer's panel brings the supercharger relay switches into operation at about 12,000 ft. to give full supercharge. When the aircraft is grounded, the push-button can be pressed to give full supercharge and, immediately full supercharge has been selected, either manually or automatically, the warning lamps light. The lamps are controlled by micro-switches mounted on the supercharger rams on the engine. The action of selecting full supercharge energizes two relays mounted in the power panel. Two 10 amp. fuses on this panel protect the main supercharger supply.

Engine Priming

27. Electrically-driven pumps mounted behind both inboard bulkheads supply fuel for engine priming; switching on the priming switch starts up the motors driving the fuel pumps, which have internal relief valves. Push buttons on the pilot's panel control the individual solenoids for priming the selected engine. When fitting a replacement motor, a special note should be taken of the pump connections which require a strapping link to be fitted.

Fuel Pumps

28. The Pulsometer pumps are mounted on distributor tanks behind the inboard firewalls and are controlled by switches on the engineer's panel. The suppressors for these pumps are mounted on the inboard firewalls. For particulars of Pulsometer fuel pumps, see A.P. 2241, Vol. I, Sect. 3. Connect a 24 volt test lamp to pins A and B of each fuel pump motor supply socket. Operate each fuel pump switch in turn, and observe that the corresponding test lamp operates. For auxiliary fuel pump motors, connect the test lamp to pins 1 and 2 of sockets F68 and F69 in centre bomb cell and turn on the forward and aft auxiliary fuel pump switches, when the respective test lamp should operate.

Fuel Flowmeters

29. Two fuel flowmeters of the twin indicator type are mounted on the flight engineer's panel. The meters indicate the total quantity of fuel delivered to each engine. The indicators are electrically connected through suppressors, located respectively in panels 4P, 5P, 6P and 7P, to the transmitter units, which are located at each engine. The indicator can be reset to zero by means of the knob provided on the left hand side of the bezel. Bridge the two pins of the socket on the flowmeter lead on each engine bulkhead, when a slight movement of the corresponding indicator should be observed. Displacement of the fuse will cause the indicator to oscillate. For details of system see A.P. 1275A, Vol. I.

Fuel Pressure Warning Lights

30. A description of the system, which consists of a switch and resistance unit, and warning lamps, will be found in A.P. 1275A, Vol. I, Section 1, Chapter 11. The warning lamps are mounted on the engineer's panel and the resistance units inside the spar junction boxes. Make the function test during the fuel flow, check and ensure that each warning lamp is extinguished when the fuel pressure reaches 10 ± 2 lb. per sq. in. (for Merlin 85 only).

Oil Pressure Indicators

31. The system consists of four transmitters, one on each engine, electrically connected to four indicators, mounted on the pilot's panel. The system is supplied through the same fuses as the fuel pressure warning lights. Move the fuses in and out of their holders and observe that the indicators fluctuate accordingly.

Undercarriage Indicators and Buzzer

32. A standard warning system is embodied with the indicator mounted on the pilot's panel and the UP and DOWN indicator lamps controlled by switches on the undercarriage legs. A horn and test button are mounted behind the pilot to give audible warning should either of the inboard throttles be more than two-thirds closed with the undercarriage in the retracted position; for this purpose, both inboard engine throttle switches are connected in parallel.

Carry out the function check during the undercarriage retraction tests and note the amount of depression on the Burgess micro switches. With both undercarriage legs down, both green lamps should light. Lift each of the four DOWN micro-switch catches in turn and note that the appropriate green lamp is extinguished. During the retraction, note that the red lamps are alight from the time the DOWN micro-switch catch lifts and remain alight until the undercarriage is locked in the UP position when all lamps should be out. With the undercarriage retracted, press the warning horn test switch and note the functioning of the test lamp and horn. Close each inboard engine throttle-lever to approximately two-thirds closed and note the operation of the audible warning. With the throttle in this position, lower the undercarriage and ensure that the warning horn stops when the undercarriage is fully extended. Break each DOWN switch in turn and note that the warning sounds again as each micro-switch catch is lifted.

Flap Indicator

33. A Desynn flap indicator is mounted on the pilot's panel with a transmitter controlled by the GROUND/FLIGHT switch. Servicing should be carried out during the hydraulic tests and the transmitter adjusted until the reading on the indicator corresponds to the position of the flap.

Oil Temperature Indicators

34. The system consists of standard Mk. II electrical indicators mounted on the engineer's panel and coupled to resistance bulbs at the appropriate engine outlet. A description of the instrument will be found in A.P. 1275A, Vol. I, Sect. IV, Chap. 1. Oil temperature and all essential instruments are connected directly through the GROUND-FLIGHT switch and have no individual switches in circuit. Remove the plugs from each resistance bulb in turn, and observe that the corresponding indicator is open circuited. When connected, the indicators should read approximately ambient temperature.

Radiator Temperature Indicator

35. The remarks on oil temperature gauges (para. 34) are also applicable to radiator temperature gauges.

Engine Speed Indicators

36. These are standard installations using a three-phase alternator transmitter and synchronous motor indicator as described in A.P. 1275A, Vol. I, Sect. I, Chap. 4. Remove flexible drives from the engine gear case and attach a hand drill to the drive. Rotate drive and observe movement of the corresponding indicator on the pilot's panel.

Fuel Contents Indicators

37. Fuel contents gauges are mounted on the engineer's panel, their layout corresponding to that of the tanks. With the fuse in circuit, check that the indicators give a zero reading with empty tanks and, during the fuel flow, check that the correct indicator gives the quantity of fuel delivered to the tank. Details may be found in A.P. 1275A, Vol. I, Sect. 3, Chap. 12. If auxiliary tanks are not fitted, connect a test potentiometer to sockets F.68 and F.69 in centre bomb cell, and check long range indicators through the full scale.

Fire Extinguishers

38. The complete two bottle methyl-bromide system is fitted. The operation of a flame switch closes the circuit to the warning

lamp on the pilot's instrument panel. On depressing the push-button switch on the pilot's panel, the air intake bottle will operate and after ten seconds, the delay action switch will operate the engine spray bottle. An inertia switch fitted in the nose, and four push buttons mounted on the pilot's instrument panel give instantaneous operation of the bottles when the switch contacts are closed.

39. Remove all bottle sockets and disconnect the positive supply to each delay cartridge. The following tests are given for one engine only, and should be repeated for each engine. Short-circuit any flame switch on the engine firewall and mounting; this should immediately operate the warning lamp on the pilot's panel corresponding to the engine under test. Connect a 24-volt test lamp across the delay cartridge positive and earth terminal and also across the air intake bottle socket. Press the fire extinguisher button on the pilot's panel and both lamps should light. With test lamp across the spray bottle socket, operate the small test screw on the delay switch and check that the lamp lights when the screw is turned, and goes out when the screw is released. After the above tests have been carried out on all engines, trip the inertia switch and, with a 24-volt test lamp, ensure that there is a supply to all bottles for both air intake and spray services.

40. On later aircraft, which will have a modification incorporated introducing four relays mounted near the delay switches, and the fire control cables connecting to the propeller feathering switches, the push buttons and inertia switch will be used only as an emergency measure. The flame switches are connected to a double pole relay, the operation of any flame switch energises its circuit relay and closes both contacts, one completing the circuit to the warning lamp and the other closes the bottle and delay firing circuits up to the feathering switch. The feathering of the propeller on the faulty engine then completes the circuit and fires both the air intake bottle and the cartridge of the delay switch.

41. Disconnect the sockets to all bottles and the positive supply to each delay switch cartridge. Disconnect the positive lead from the pump motors. Short circuit any flame switch and the appropriate warning lamp should light. This switch will have to remain short circuited until the end of the following test: Connect a test lamp across an air intake bottle socket and press the corresponding feathering button, when the test lamp should light. Repeat the above test with the test lamp across the delay cartridge positive connection and earth. Re-set the flame switch and note that the lamp is extinguished. Check the functioning of the delay switch as described in the previous test. Connect a 24 volt test lamp across the air intake bottle and spray bottle in turn and the lamps should light when the correct fire extinguisher button is pressed. After carrying out the above tests on all engines, ensure that the bottle sockets are still disconnected and trip the inertia switch in the nose; a light should be obtained at all bottle positions for both air intake and spray services.

Landing Lamps

42. Switch on the exterior lamps master switch and operate the landing lamp switch; the lamp should then take up a position as indicated on the switch label.

Navigation and Head Lamps

43. Switch on the exterior lamps master switch and select the navigation lamps; note that the lamps on each wing and tail, light. Switch the selector switch to DIM and note that there is a similar decrease in light from all lamps. Switch head or station lamp to MORSE and note correct functioning of lamp.

Resin and Glider Tug Lamps

44. Switch on the exterior lamps master switch and main control switch on pilot's panel and select each resin lamp colour in turn by means of the switch mounted on the pilot's panel. Note that the appropriate coloured lamp lights. Switch on the glider tug switch and note that the tug lamp lights (if connected).

Identification Lamps

45. Switch on the exterior lamps master switch and select each identification lamp colour in turn, and on 1DB press the downward identification morse key. Note that the lamp corresponding to the selected colour lights. Switch the head and station lamp switch on

1DB to MORSE and see that the head lamp responds to the identification lamp morse key.

Pilot's Panel Lamps

46. Four U/V lamps and four red lamps are mounted around the instrument panel, and are controlled from four dimmer switches mounted on the canopy roof. Check that the U/V and red lamps are extinguished when their respective fuses are removed. The P.4 compass lamp and the lamp for the pilot's repeater are connected to the fuses for red and U/V lamps respectively.

General Lighting

47. There are a number of dimmer-controlled cockpit lamps and cabin lamps at various stations in the aircraft and these should be functioned by switching on and checking that the station lamps are fed through the correct fuses.

Call Lamps

48. Call lamps are positioned at various stations in the aircraft and servicing should be carried out by pressing each call lamp button in turn, when all lamps should light as each button is pressed.

Heated Pressure Head

49. An electrically heated Mk. VIIIB, or Mk. VIIIH pressure head, mounted on the port longeron, is controlled by a switch on the engineer's panel. To test, switch on the head and note an increase in temperature. A test button is also provided to check current consumption by means of the test ammeter. Unless in flight, the pressure head heater must not be switched on for more than five minutes, or over-heating will develop and damage the head.

Bomb Slip Heater Supply

50. Place the heater switch on the starboard bomb aimer's panel in the ON position and apply a 24-volt test lamp across the heater socket in the bomb cell.

Heated Clothing Supply

51. Place the "Body" switch on the starboard bomb aimer's panel, in the ON position and apply a 24-volt test lamp across Red and Green pins of the socket on the auto control panel. With "Hands" and "Feet" switch on, test across Blue and Green pins of heating socket.

Automatic Pilot

52. A Mk. VIII automatic pilot is installed and is controlled by a three-way switch mounted above the pilot's instrument panel. To service, remove the cover from the relay valve and switch the automatic controls to COURSE. Move the pilot's repeater to LEFT and note that the air valve on the relay marked LEFT pulls in; repeat with the pilot's repeater turned to RIGHT and note that the valve marked RIGHT pulls in. Switch the selector switch to JINK and the jink valve on the relay should pull in, and the operation of the pilot's repeater to LEFT and RIGHT should operate the left and right valves on the relay.

Flare Chute, Mk. III

53. Place hydraulic selector to "Bomb doors open". The flare chute deflector plate should lower with the flare switches on the port bomb aimer's panel in the "Off" position. Close the camera master switch and operate the bomb firing button in the Bombs and Night camera socket, when the flash chamber door should open. Bridge the connected pin of socket on 46/S1302 and positive pin of socket on 057/S1302 at camera control panel and pull the lanyard switch. The camera warning lamp on the pilot's panel should operate. Reset the flash chamber door and press the bomb firing button in the Bombs and Day camera socket. The camera warning lamp should operate with the control sockets bridged as above; but without operation of the flash chamber or lanyard switch. Return all switches to "Off" and return bomb door lever to "Closed" position. Deflector plate should return to "Up" position. Close the flare switches on the port bomb aimer's panel. The deflector plate should lower, and on reaching the lower limit, the flare cell door should open and the flare warning lamp should operate. Place the flare switches in the "Off" position, when the warning lamp should be extinguished and the deflector plate retracted to the "Up" position. Check camera supply with a 24-volt test lamp across pins 1 and 2 of socket on 48/S1302 at camera control panel.

Dinghy Release

54. Connect a 24-volt test lamp to operating head socket in dinghy bay and short immersion switch in starboard side of the nose section.

Mk. XIVA Bomb Sighting Head Supply

55. Check for supply at control panel forward of bomb aimer's seat, with a 24-volt test lamp across pins 2 and 3 of sighting head socket with the toggle switch and graticule dimmer in the "ON" position, and pins 5 and 6 with drift scale dimmer in the "On" position.

A.R.I. 5131 Demolition

56. The A.R.I. 5131 demolition circuit is fed by two fuses, one feeding the W/T push button and a crash switch mounted in the nose, and the other fuse feeding both navigator's and pilot's push-buttons; thus any button energizes the terminals of the detonator plug. Connect a test lamp across the detonator socket and press each set of detonator pushes; the lamp should then light. Trip the crash switch and, with the selector switch on the navigator's panel at SAFE, note that the lamps light and that the test lamp at the detonator socket is out. Switch the IFF switch to LIVE and note that the test lamp lights.

Front Turret B.P. Type F

57. Press the start button on starboard bomb aimer's panel, with the type A circuit breaker on the turret panel closed, the warning lamp should light. Connect a test lamp across the leads at suppressor and press each hand grip in turn. The master relay should operate and the test lamp light. Attach test lamps to right and left hand 2 pin flat sockets at outer stowages of gun positions and turn on the gun heater switch. The warning lamp should light together with the test lamp. Check fuses 1 and 2 on turret panel. Attach the test lamps to right and left hand 2 pin flat sockets at inner stowage positions. Place Safe/Fire Switch in "fire" position and operate the firing triggers separately. The type P firing relay should operate and the test lamps should light. Operate the disengage lever and check that the firing is inoperative. Check fuses 3 and 4 on panel. With the reflector sight switch on, test for supply at the reflector sight socket. Operate the panel light dimmer switch and check the 5 amp. fuse on the turret panel. Turn off all switches and press the turret stop button.

Note.—Care must be taken to check with Armourer that guns are clear before starting work on turrets.

Mid-upper Turret, Type B. 17

58. Connect a test lead across the generator motor supply leads and press the start button on the control panel on port side of the fuselage. The test lamp should light. Press the adjacent stop button, when the light will be extinguished. Repeat the operation with the push buttons on the turret and check the 15 amp. fuse. With the supply on, test for 24 v. across the field windings of rotation and elevation motors. Check fuses 2 and 3 on turret fuse box. Press the high speed switch with test lead across rotation motor field and observe a decrease in brilliancy. Close the master control switch, the interlocking relay should operate opening the contacts. Press the high speed switch, the relay should become de-energised and the contacts close. Close the master control switch for gun firing and servo motors and press the firing trigger, the firing relays and solenoids should operate. Operate the micro switches on the servo motor controls or close the relays and note the operation of the servo motors. Check each circuit for correct fusing. Operate the spotlight dimmer switch. Both spotlights should operate. Close the clothes heating switch and apply a test lamp across red and green, and blue and green pins of heating sockets. Close the camera heating switch and connect a test lamp across slate and black, and red and blue pins of the camera gun socket. Connect a test lamp across white and black pins of camera gun socket and press the gun firing trigger.

Note.— Care must be taken to check with Armourer that guns are clear before starting work on turrets.

Rear Turret, B.P. Type D

59. Close both type A circuit breakers (Panels 2P and 3P) for the rear turret supply. Close the main switch on the turret and note that the warning lamp operates. Connect a test lamp across the right and left hand 2 pin gun firing sockets at the inner stowage positions, close the gun firing switch and press the firing button on the control column. Check fuses 1 and 2 in turret fuse box. Repeat the above test and note that the auxiliary ammunition assister motors on port and starboard side of the rear fuselage operate. Check fuse 3 in turret fuse box. Operate the micro

switches for turret servo motors and check their 20 amp fuses during the operation. Apply a test lamp to the reflector gun sight terminal block at left side of turret and check fuse 5. Turn on the heated clothing switch and apply a test lamp across red and green, and blue and green of the heating socket. Check fuse 6. Operate the dimmer switch and check the function of the panel light. Check fuse 7. Turn the gun heater switch on and test for supply across terminals A and B of scanner heater terminal block. Also test across terminals A and C and check fuse 8. With the heater switch on, attach a test lamp across the gun heating sockets at outer stowage positions and check the 20 amp. fuses at left and right of the turret. When the firing button is pressed the test lamps should be extinguished. Press the casualty evacuation button adjacent to the turret, and note the operation of the solenoid and the release of the free and engage gear, allowing the turret to be moved freely.

Note.—Care must be taken to check with Armourer that guns are clear before starting work on turrets.

Bomb Gear

60. In the event of a full set of bomb carriers not being available, a test set using four lamps to represent the release and fusing circuits should be used. Select each individual bomb station in turn and note that when either the nose or tail fusing switches are selected both fusing lamps light. Press each release button in turn and note that the release lamps light. Repeat above for all positions of distributor box switch, and at all positions press the container jettison switch when the lamp representing containers should light. Operate the jettison switch and note that the lamps give an indication of release at all bomb positions. Remove the automatic distributor and, with a 24-volt test lamp, check the supply at the distributor heater.

Plugs and Sockets

61. Where multi-pole plugs and sockets are used each pin of the plug bears a number or letter reference (this annotation is only a local reference between plug and socket). The manner in which the pins are arranged is such that the plugs can only be inserted into the socket the correct way. It is important that when screwing or unscrewing the socket, the conduit coupling must first be slackened off so that the socket shell is free to rotate independently of the conduit.

Bonding and Screening

62. Each metal section of the aircraft and various types of equipment, pipes, metal braided cables, oil and fuel tanks are bonded (see A.P. 1464D, Vol. I, Part 2, Sect. I, Chap. 5) by small copper flex cord, each end being attached to a small spade terminal. These copper strips or brass strips are connected between sections of the aircraft, e.g., elevator spar and tail plane structure. Thus all metal parts are brought to the same electrical potential in the event of the aircraft becoming statically charged, thus minimising the risk of fire; also the bonding wiring may be utilised for the necessary earth connections on the radio services. The metal braided cable of the D.R. compass, G.P.I., A.M.U. and ignition form an electro-static screen which prevents radiation of high frequency currents from being circulated. By this means the interference with the radio reception and transmission is minimised. The D.C. generators, fuel pumps, etc., are all separated by suppressors from the rest of the circuit. The tailwheel is fitted with a conducting tyre; for servicing see A.P. 1464D, Vol. I, Part 2, Sect. I, Chap. 5. When fitting or servicing bonding clips, care must be taken that the surfaces in contact are perfectly clean and free from paint or grease. The following precautions must be observed in order to reduce corrosion:—

(1) The cleaning of the protective covering from the outer surfaces of components where bonding joints occur is essential. Emery paper should not be used; a clean surface can be obtained with a scraper. When the clip is replaced the uncovered area must be recoated with similar protective covering material to that which has been removed, but where this is not possible, varnish may be substituted. This re-coating is to be done thoroughly as one of the places where corrosion is most likely to occur is between the open ends of the clips.

(2) A metal fitting should be enamelled (if not otherwise protected against corrosion) in the neighbourhood of the joint of the bond to the fitting and also wherever the bond is likely to be in contact with the fitting other than the joint itself.

(3) If the bond is soldered, it is essential that all traces of flux be carefully removed. Only approved fluxes are to be used.

(4) Leather packing must never be used between clamps, pipes or cables, as this material sets up chemical action. Where packing is necessary, either fibre, Sistoflex, varnished Langite or other non-corrosive material must be employed.

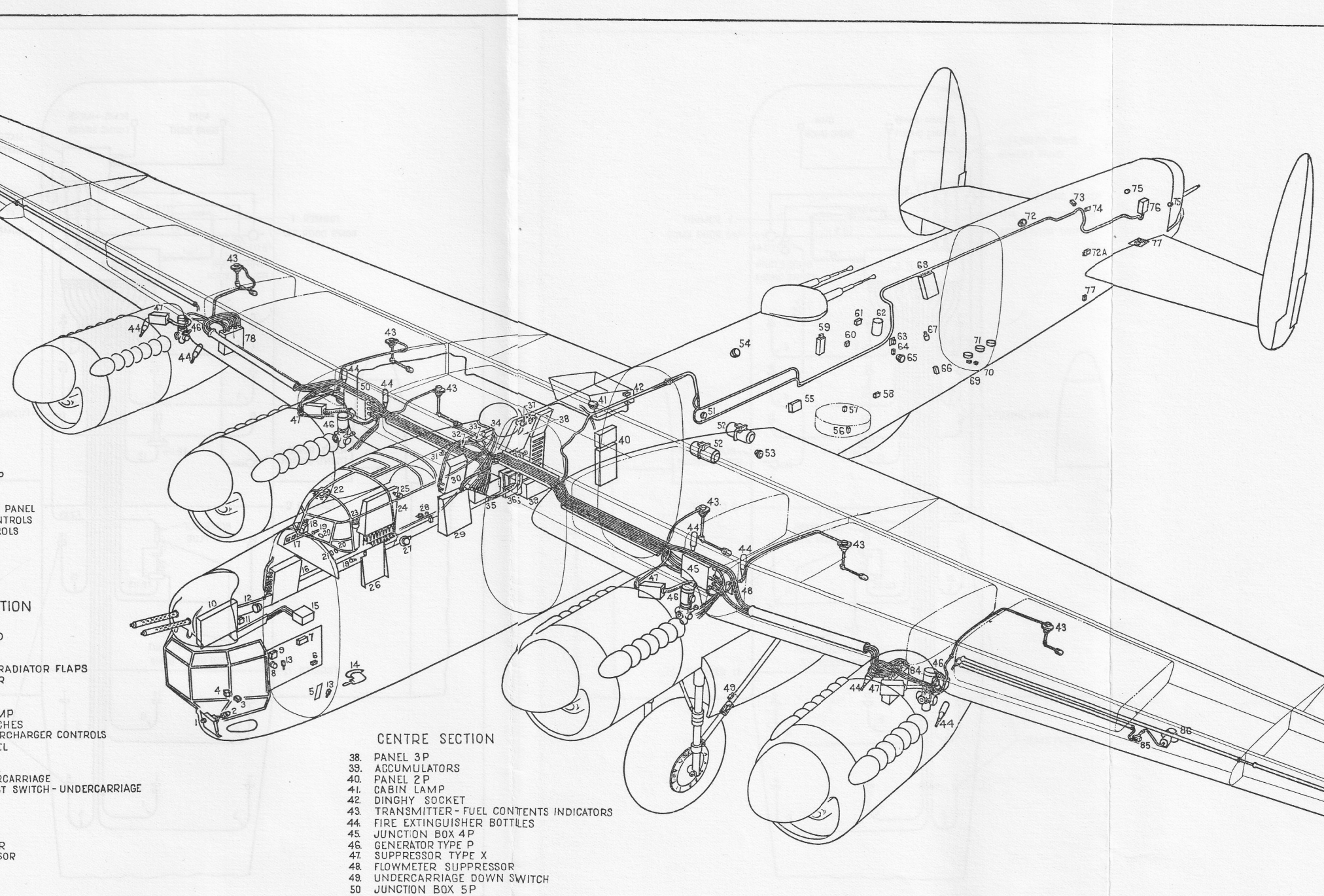

PANEL
NTROLS
OLS

TION

RADIATOR FLAPS
R

MP
CHES
RCHARGER CONTROLS
EL

RCARRIAGE
T SWITCH - UNDERCARRIAGE

R
SOR

CENTRE SECTION

38. PANEL 3P
39. ACCUMULATORS
40. PANEL 2P
41. CABIN LAMP
42. DINGHY SOCKET
43. TRANSMITTER - FUEL CONTENTS INDICATORS
44. FIRE EXTINGUISHER BOTTLES
45. JUNCTION BOX 4P
46. GENERATOR TYPE P
47. SUPPRESSOR TYPE X
48. FLOWMETER SUPPRESSOR
49. UNDERCARRIAGE DOWN SWITCH
50. JUNCTION BOX 5P

REAR CEN

51. EXTERNAL SU
52. MOTOR DRIVE
53. FLAP TRANSMI
54. CABIN LAMP
55. UNDER GUN
56. TERMINAL BL
57. TERMINAL BL
58. CALL LIGHT P
59. MID UPPER TU
60. TERMINAL BL
61. TERMINAL BL
62. D.R. COMPAS
63. SCANNER HEA
64. TERMINAL BL
65. CABIN LAMP
66. FLARE CHUTE
67. FLARE CHUTE
68. JUNCTION BO

REAR S

69. TERMINAL BL
70. TERMINAL BL
71. DOWNWARD
72. CABIN LAMP
73. TERMINAL BL
74. TERMINAL BL
75. TAIL NAVIGAT
76. JUNCTION BO
77. TERMINAL BL

WING SE

78. JUNCTION BO
79. WING NAVIGA
80. TERMINAL B
81. TERMINAL B
82. RESIN LIGHTS
83. TERMINAL BL
84. JUNCTION B
85. TERMINAL BL
86. LANDING LA
87. TERMINAL BL
88. TERMINAL B
89. TERMINAL B

LOCATION OF ELECTRICAL EQUIPMENT

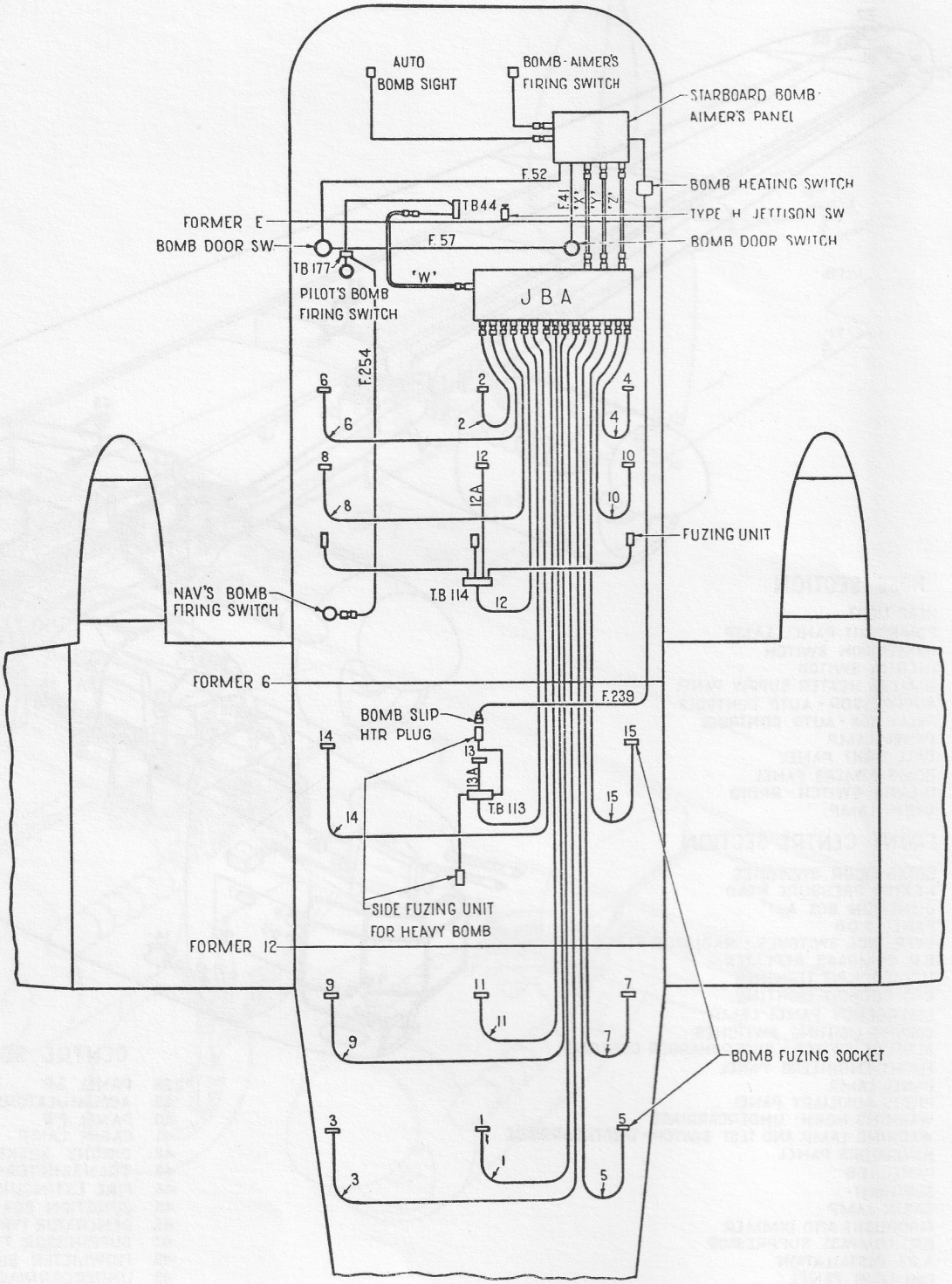

2	LOCATION DIAGRAM – BOMB FUZING & RELEASE	2

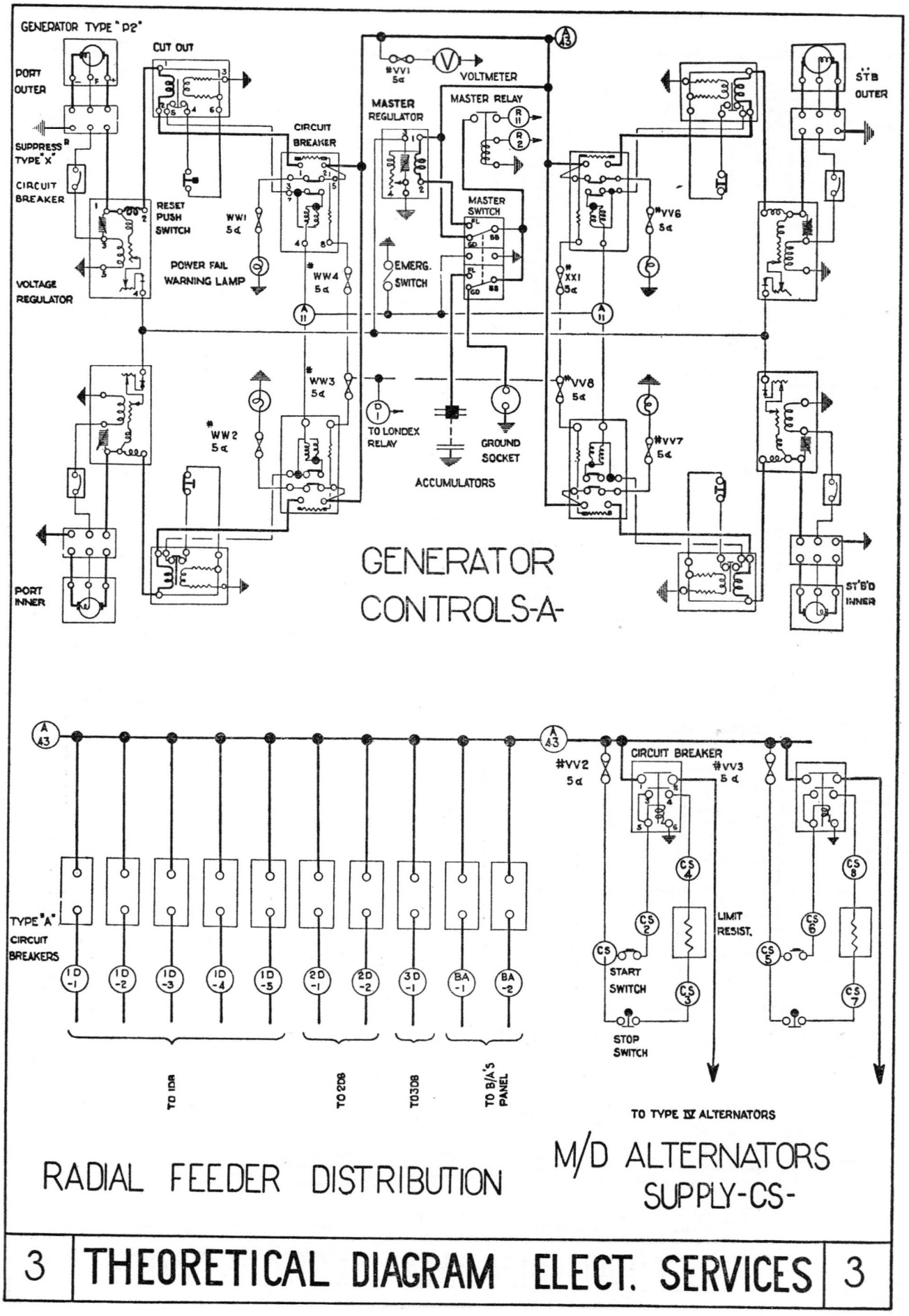

3	THEORETICAL DIAGRAM ELECT. SERVICES	3

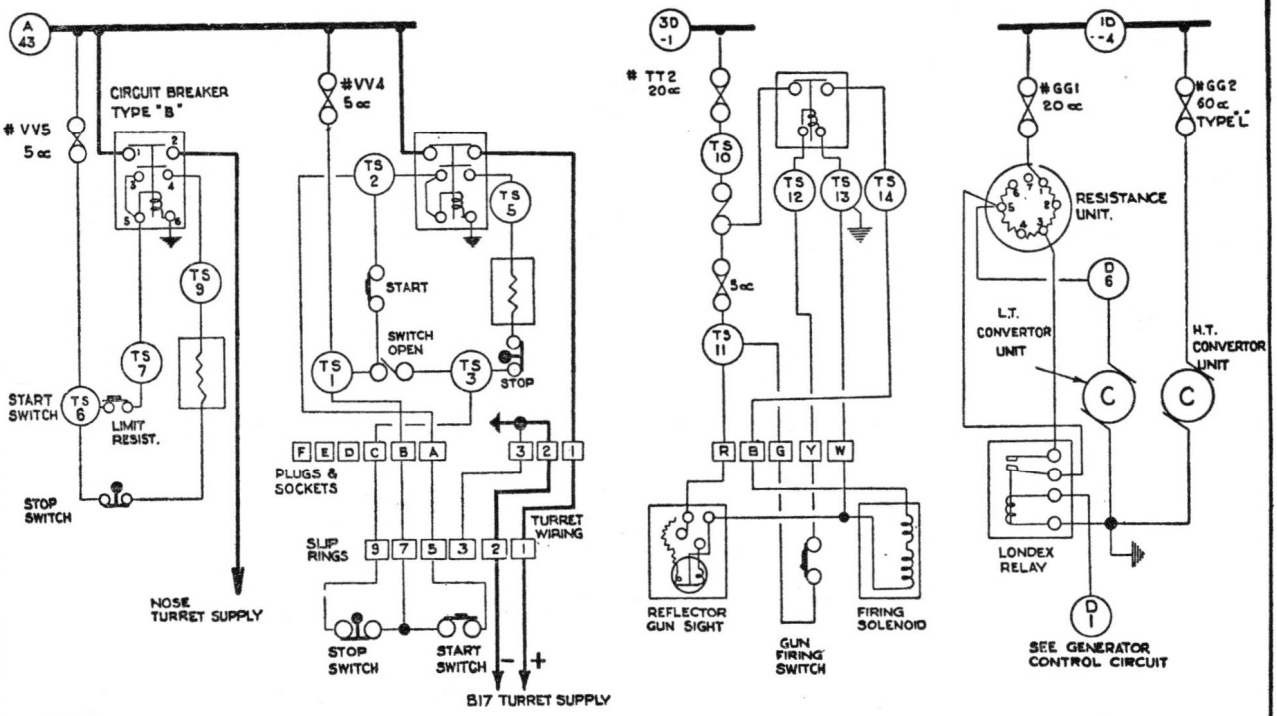

NOSE TURRET SUPPLY -TS-

MID UPPER TURRET SUPPLY -TS-

UNDER DEFENCE GUN -TS-

L.T. & H.T. SUPPLY -D-

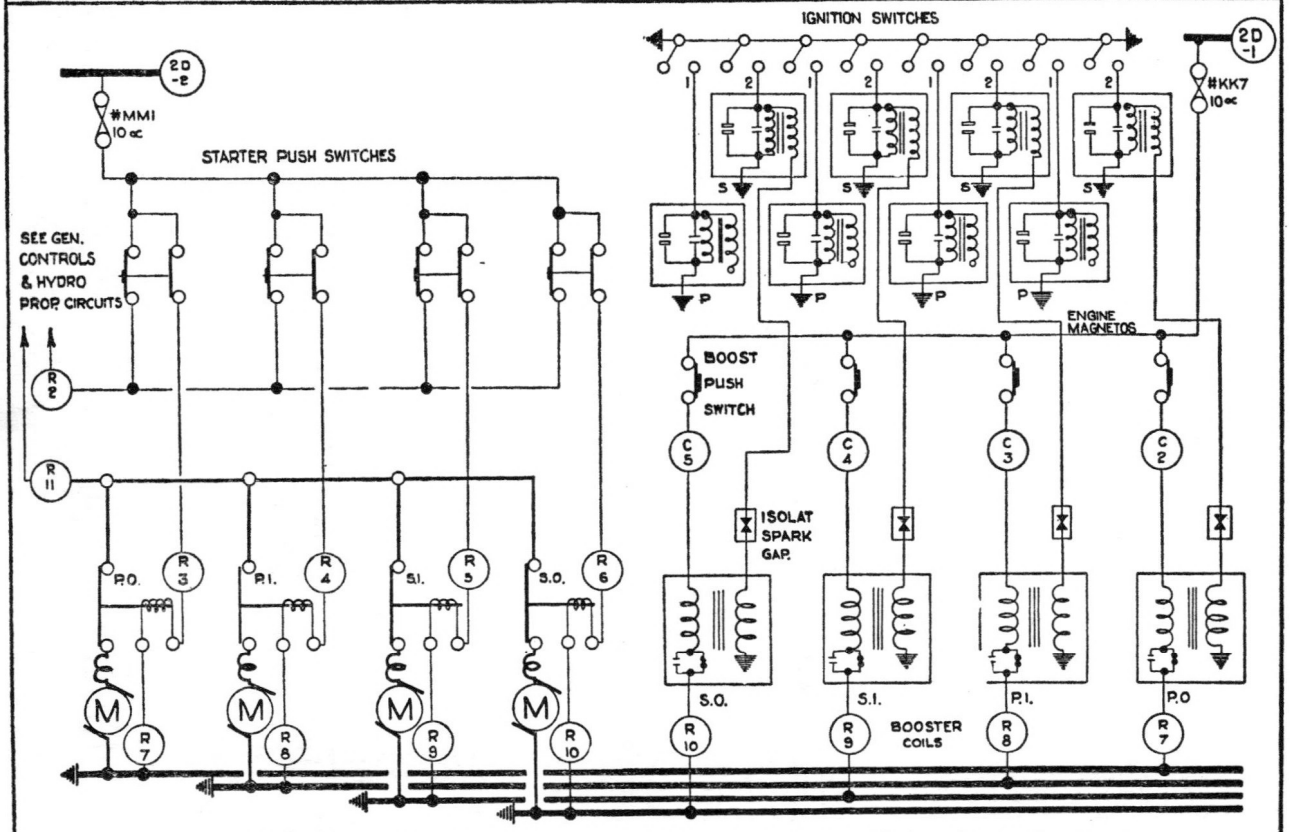

ENGINE STARTER IGNITION & BOOST- R & C

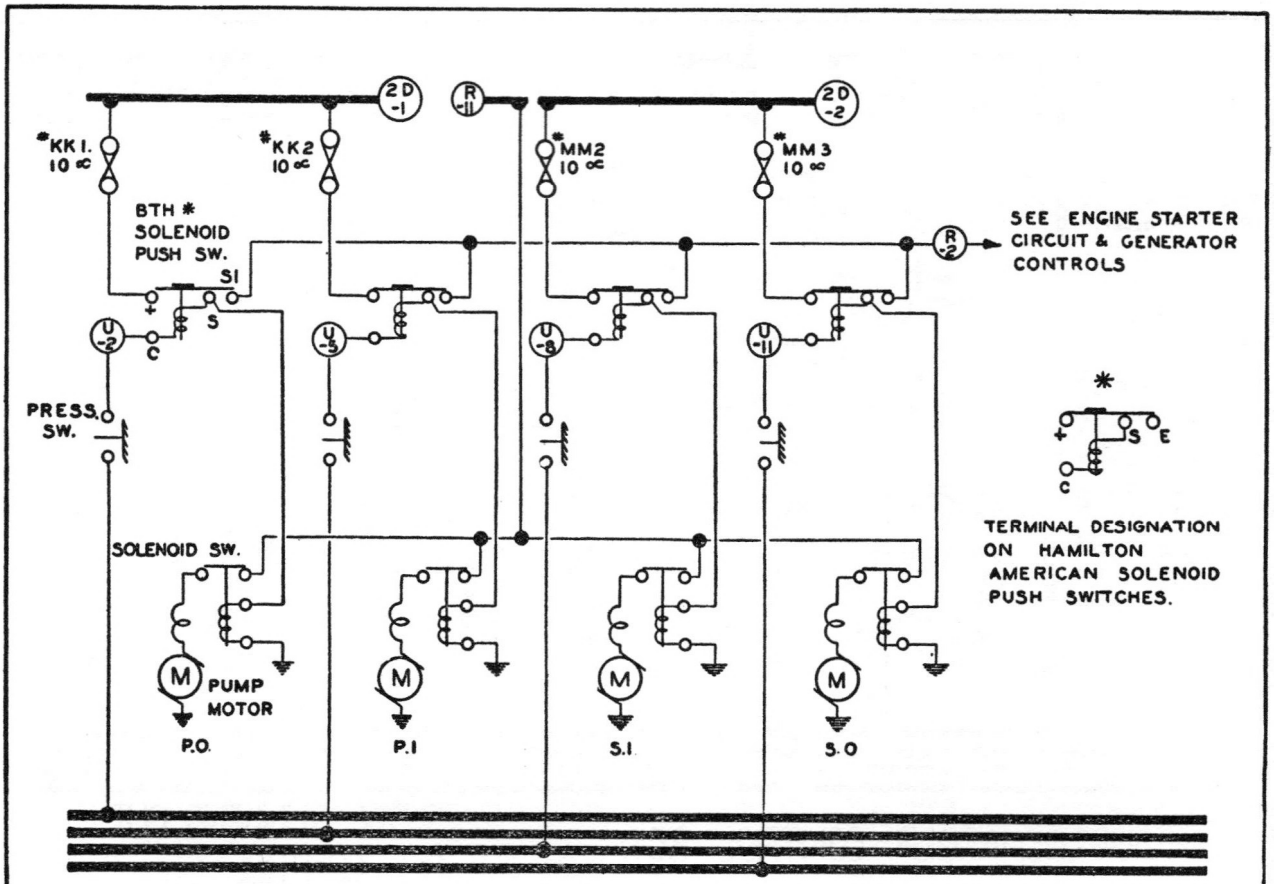

HYDROMATIC PROPELLER FEATHERING - U

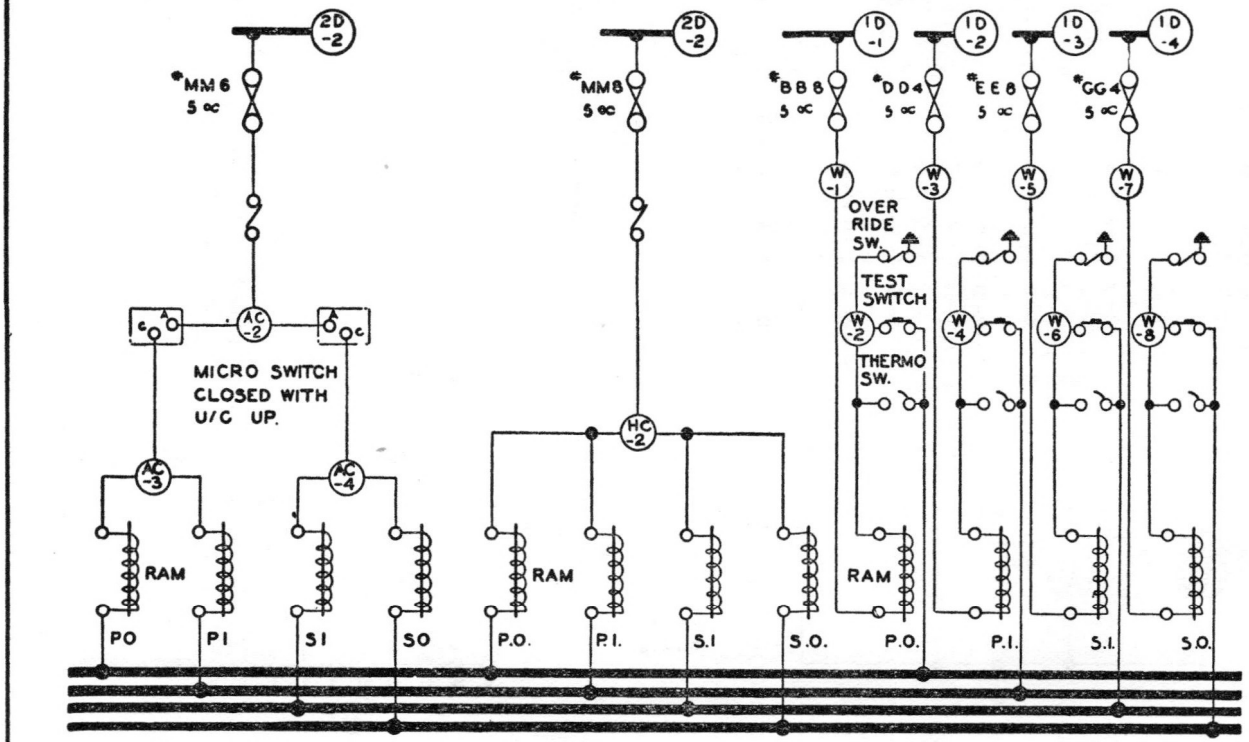

AIR CLEANER CONTROL AC HOT & COLD AIR INTAKE CONTROL - HC RADIATOR FLAP CONTROLS - W

5 THEORETICAL DIAGRAM ELECT. SERVICES. 5

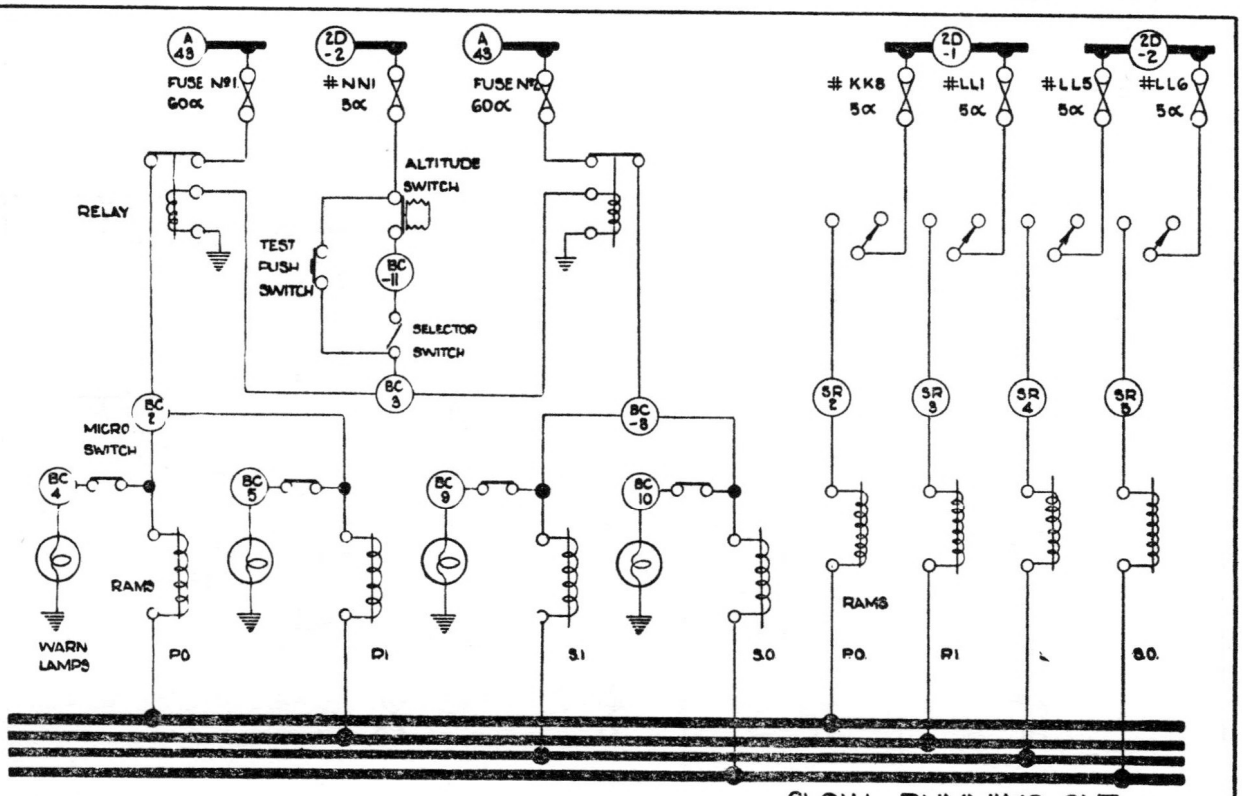

SUPERCHARGER CONTROL - BC.

SLOW RUNNING CUT-OFF CONTROL - SR

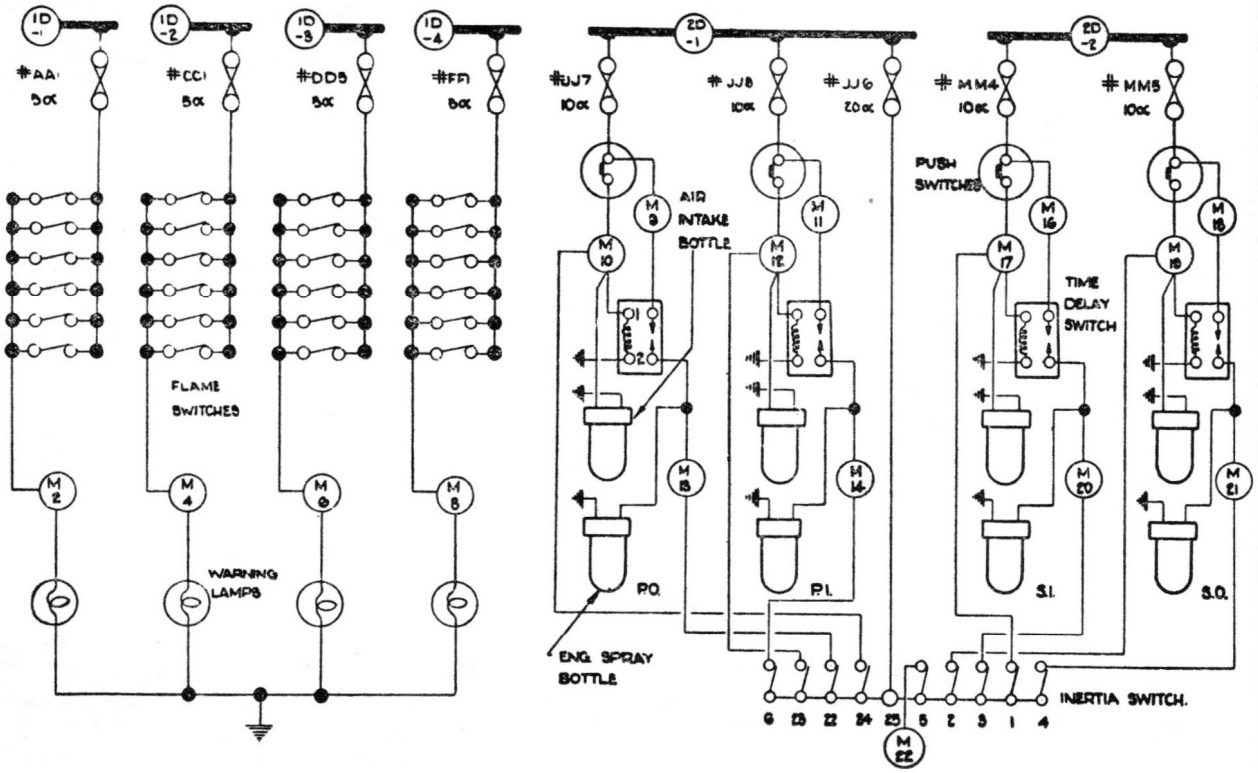

FIRE EXTINGUISHERS - M.

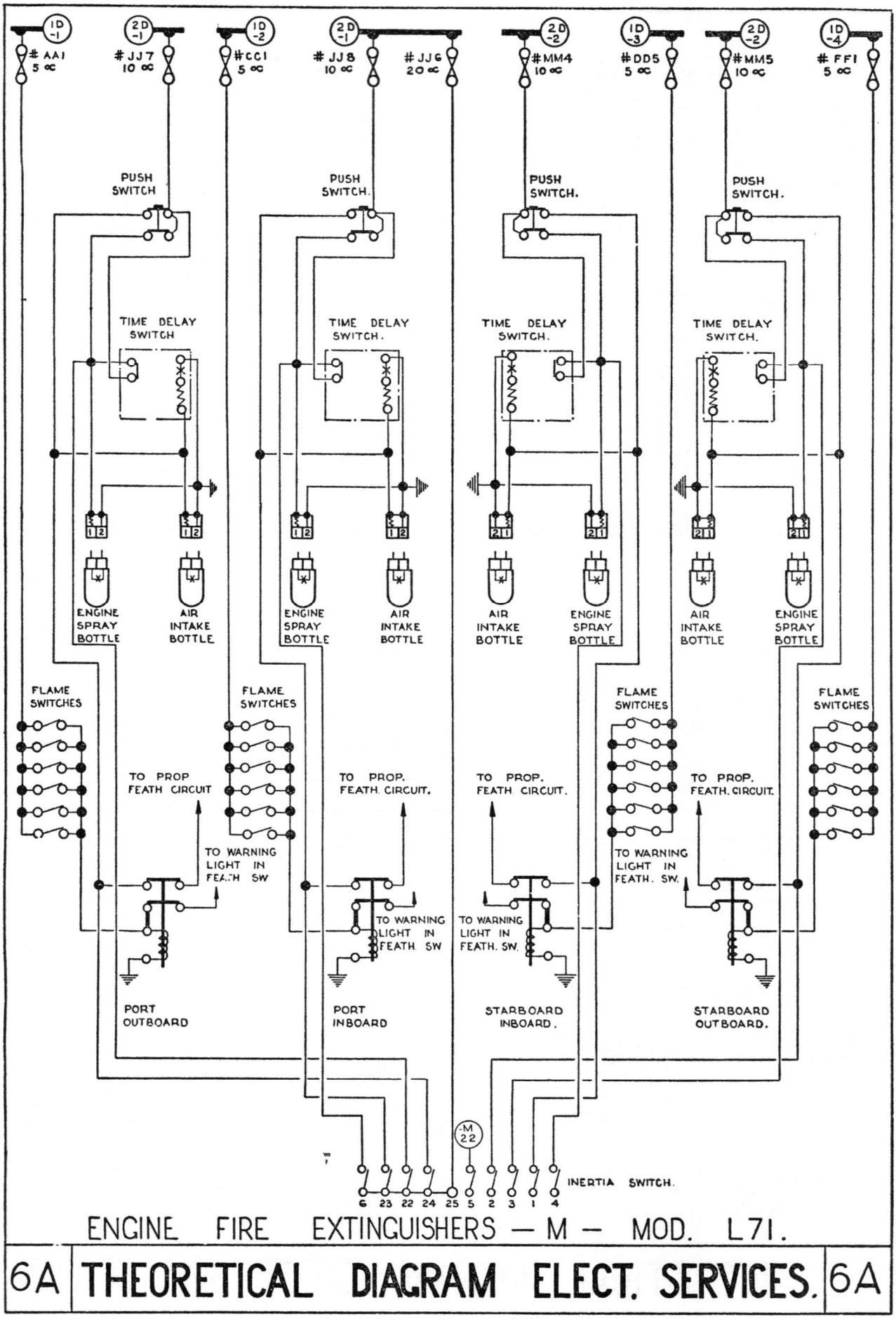

ENGINE FIRE EXTINGUISHERS — M — MOD. L71.

6A **THEORETICAL DIAGRAM ELECT. SERVICES.** 6A

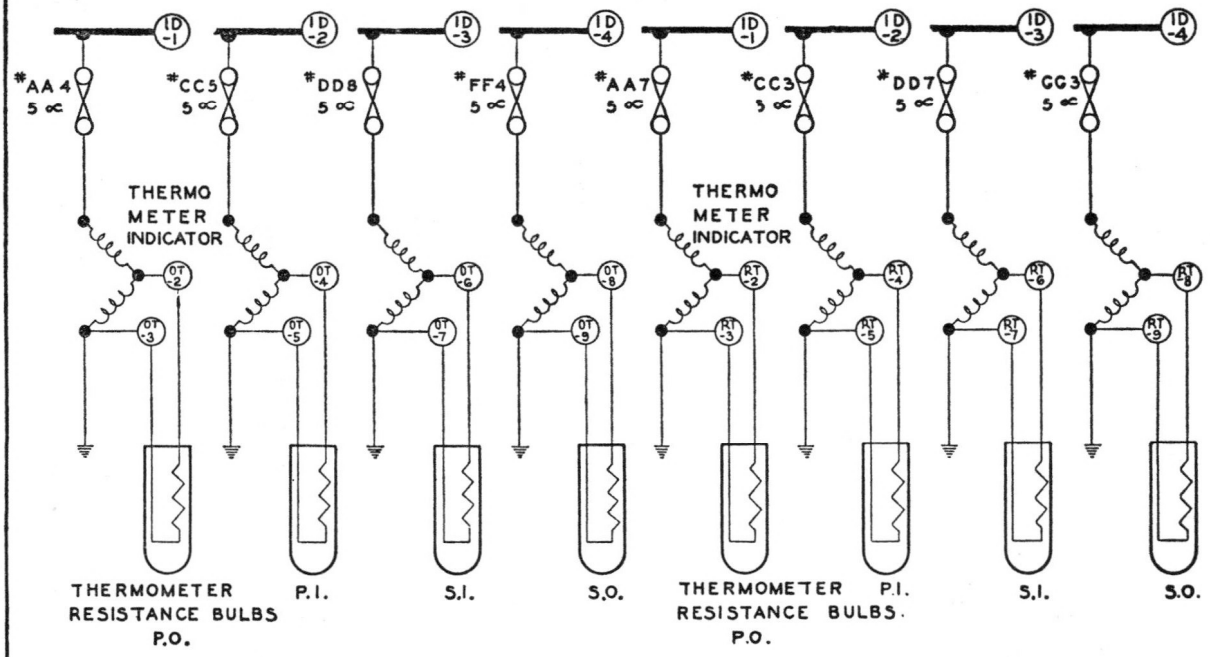

OIL TEMPERATURE THERMOMETERS - OT. RADIATOR TEMPERATURE THERMOMETERS - RT.

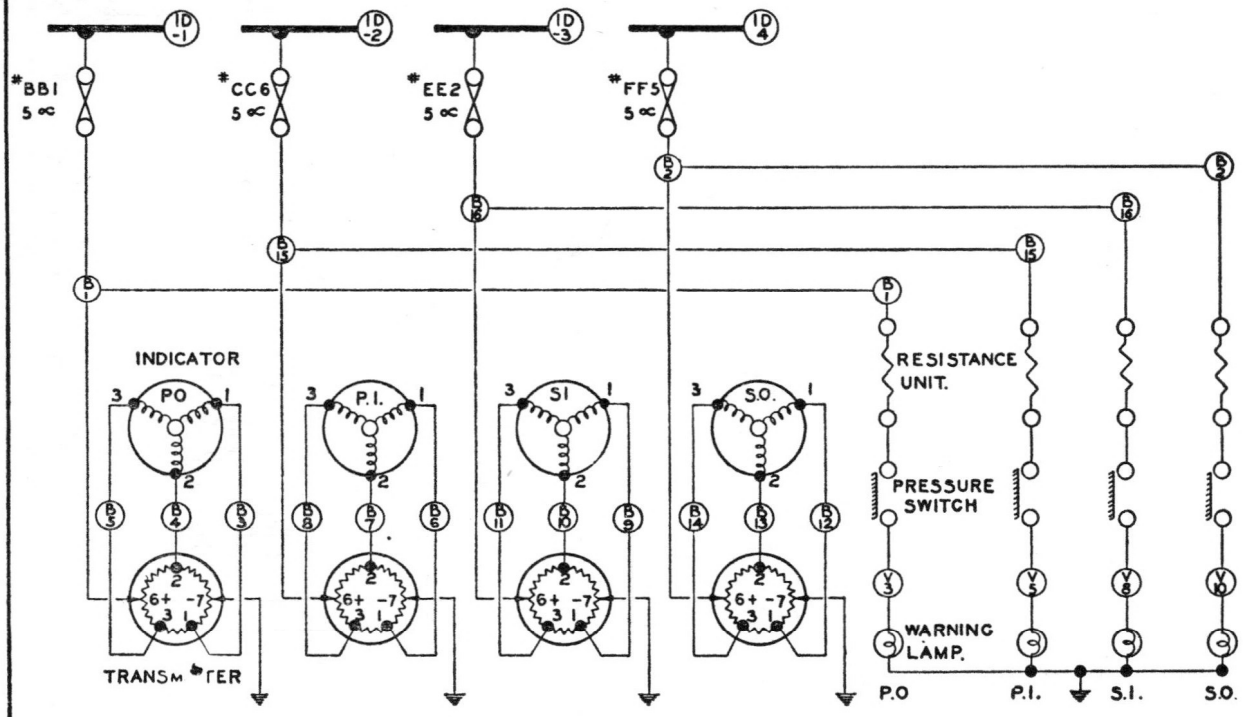

OIL PRESSURE INDICATORS – B.

FUEL PRESSURE WARNING LAMPS – V.

7 THEORETICAL DIAGRAM ELECT. SERVICES. 7

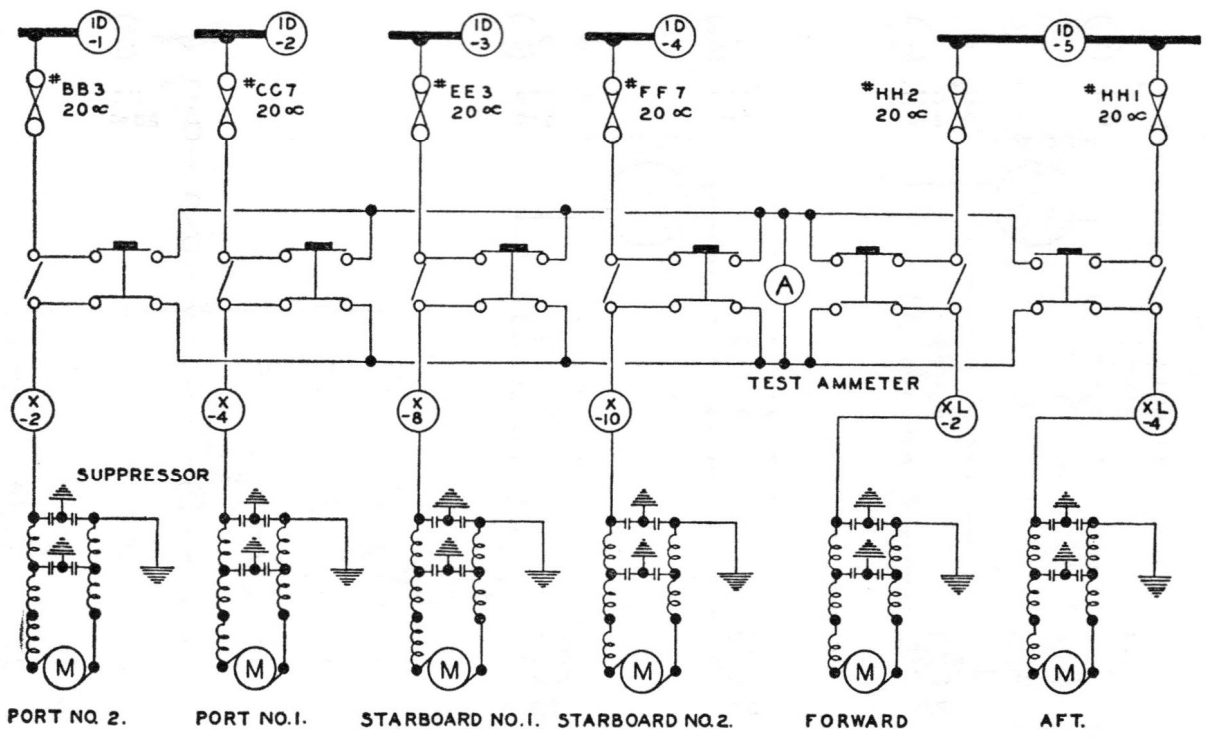

FUEL PUMPS -X-.

FUEL PUMPS FOR LONG RANGE TANKS -XL-.

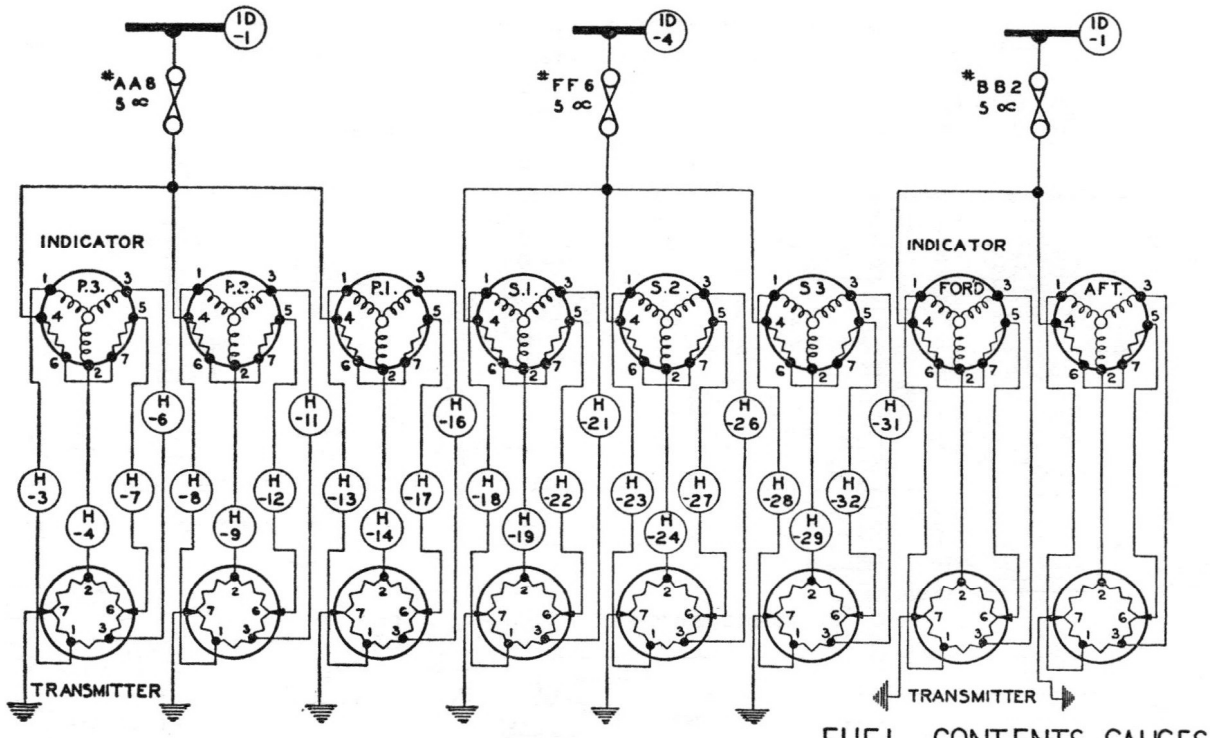

FUEL CONTENTS GAUGES - H -

FUEL CONTENTS GAUGES FOR LONG RANGE TANKS

8	THEORETICAL DIAGRAM ELECT. SERVICES.	8

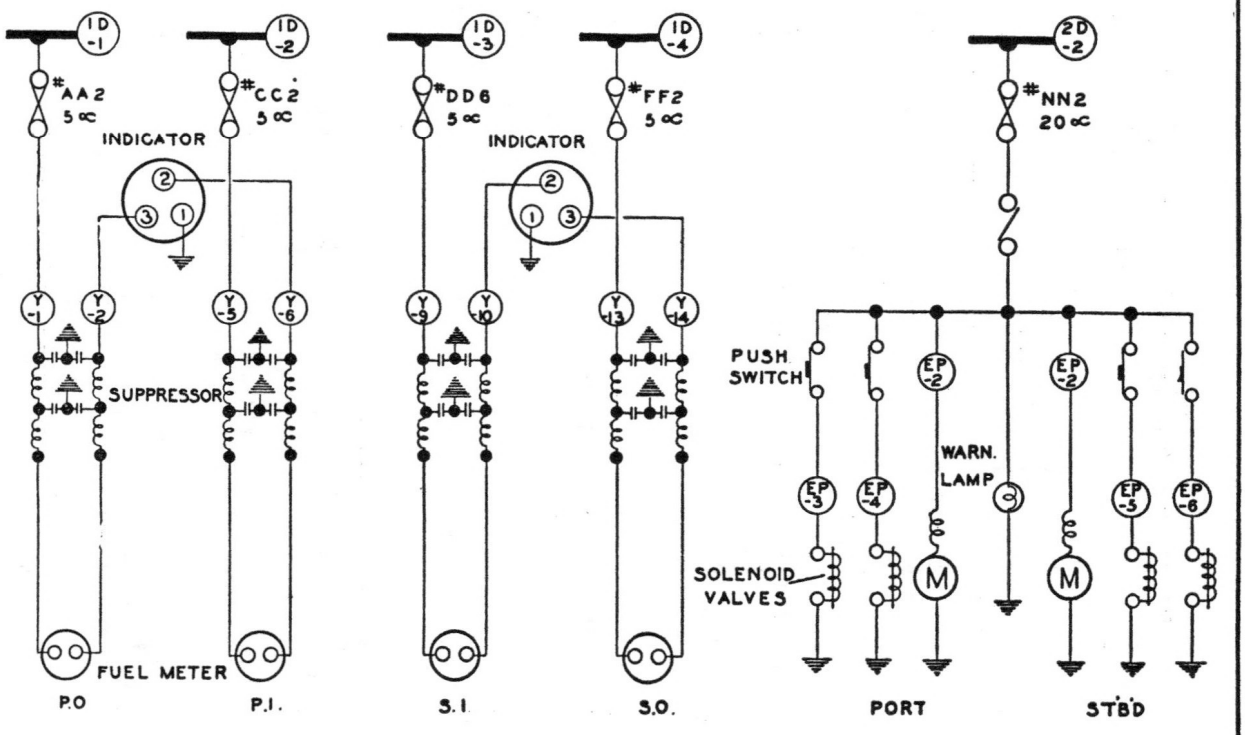

FUEL METERS -Y-

ENGINE PRIMING-EP-

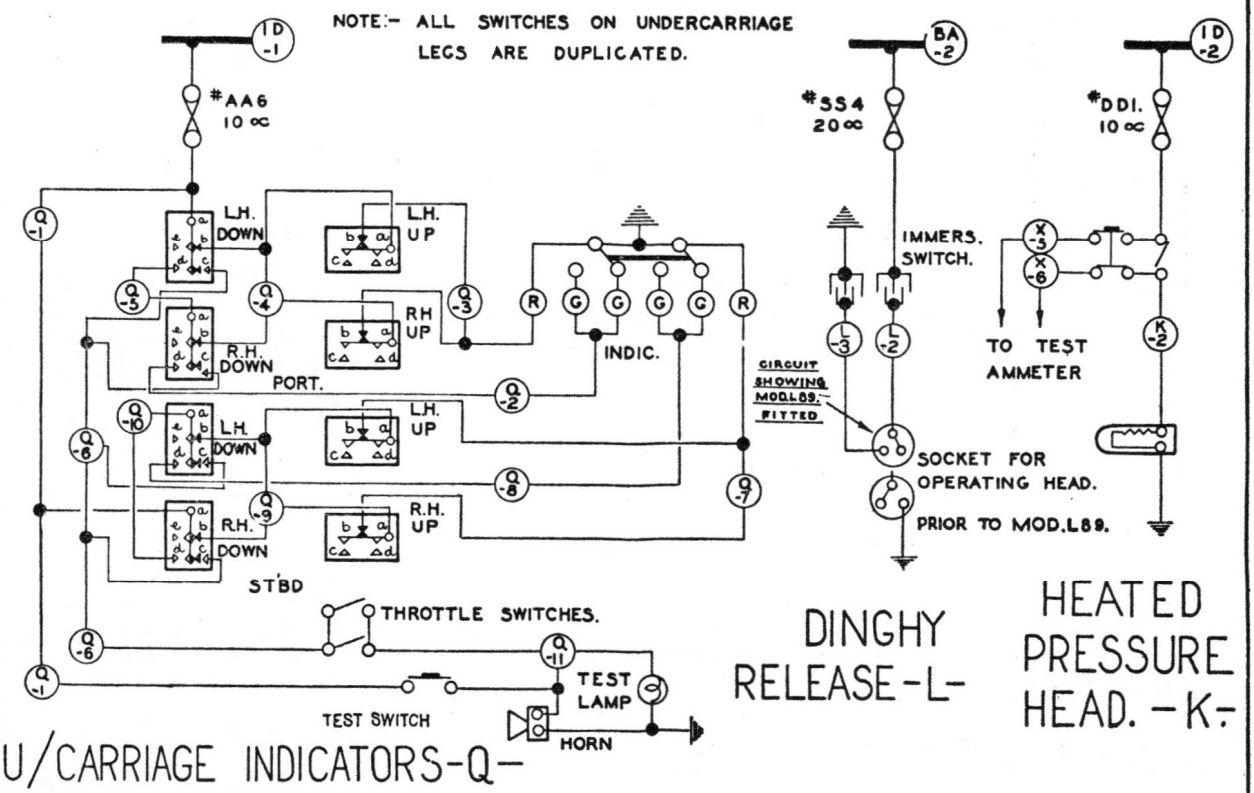

U/CARRIAGE INDICATORS-Q-

DINGHY RELEASE-L-

HEATED PRESSURE HEAD. -K-

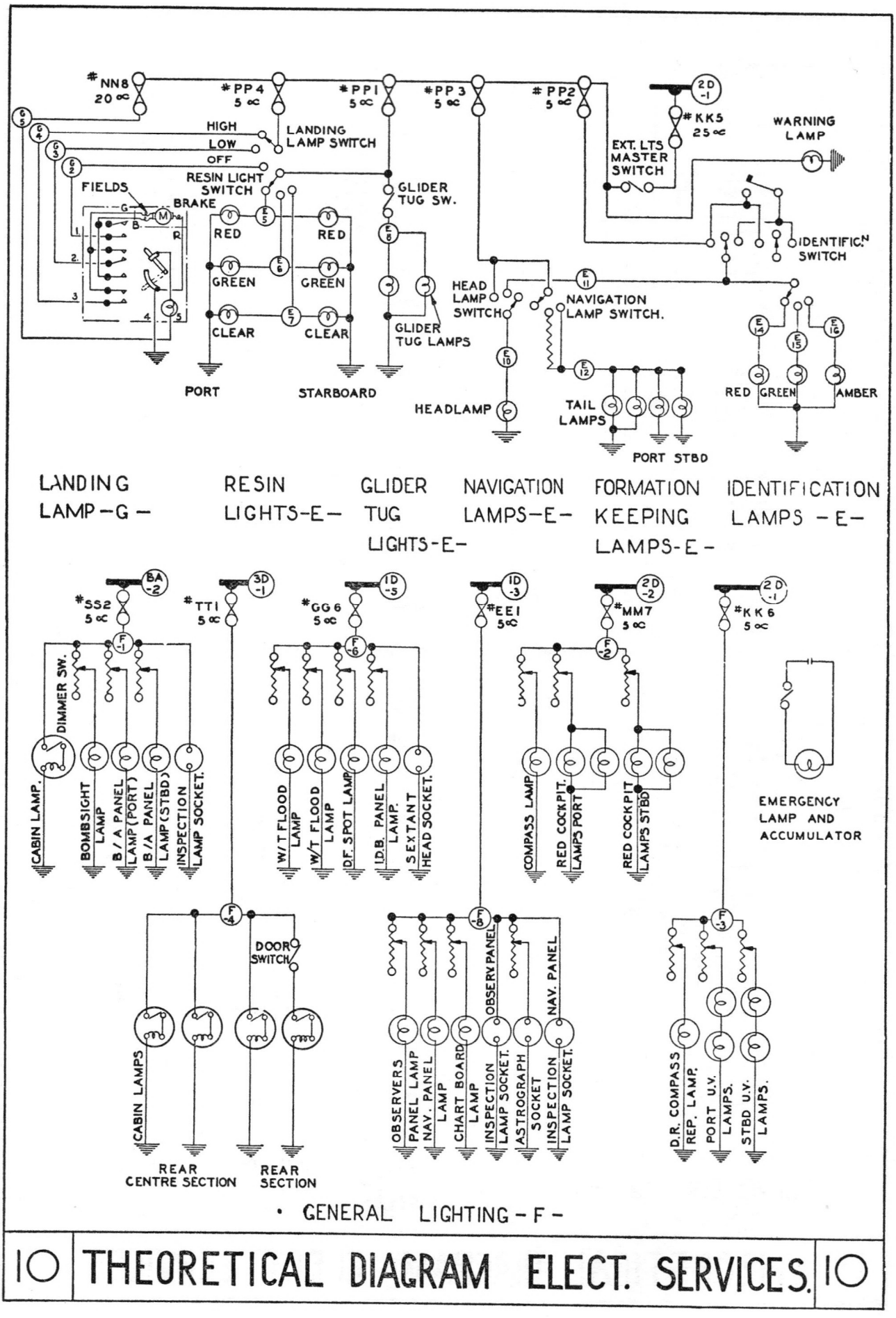

10 THEORETICAL DIAGRAM ELECT. SERVICES. 10

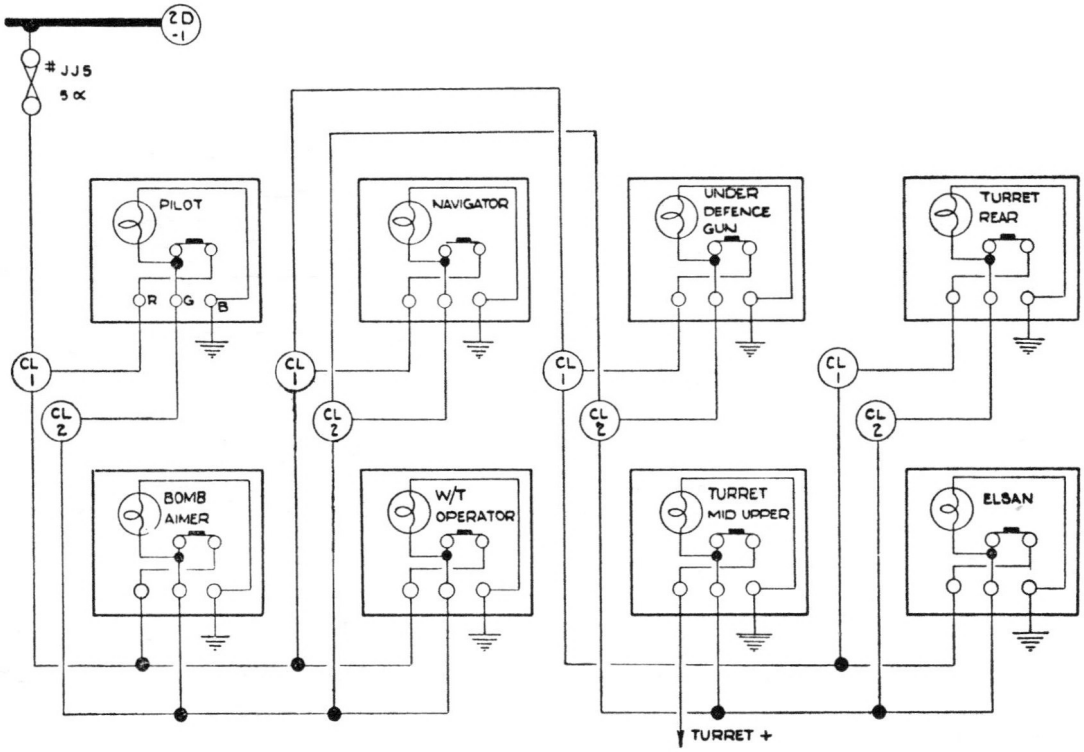

CALL LIGHTS -CL-

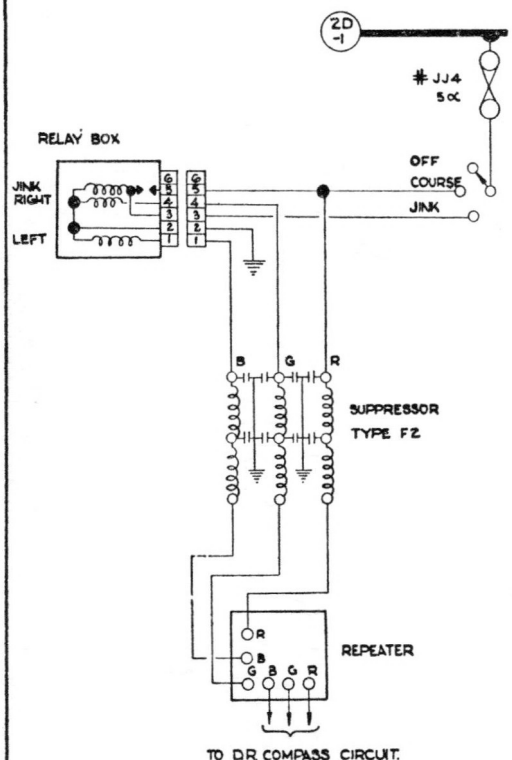

AUTOMATIC CONTROLS -S-

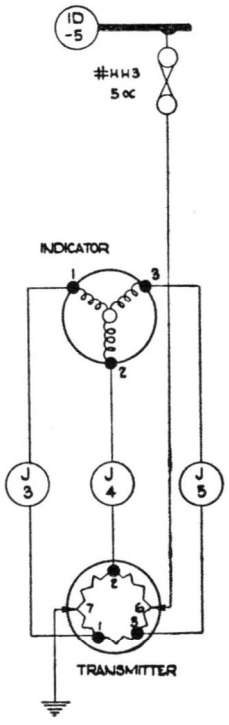

FLAP INDICATOR -J-

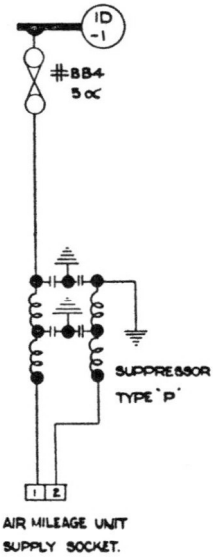

G.P.I. & AMU -GP-

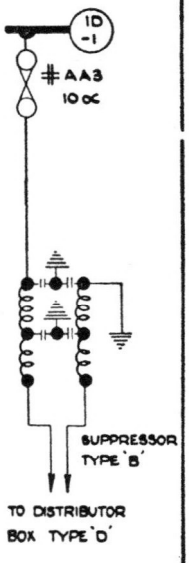

D.R. COMPASS SUPPLY -DR-

11 THEORETICAL DIAGRAM ELECT. SERVICES. 11

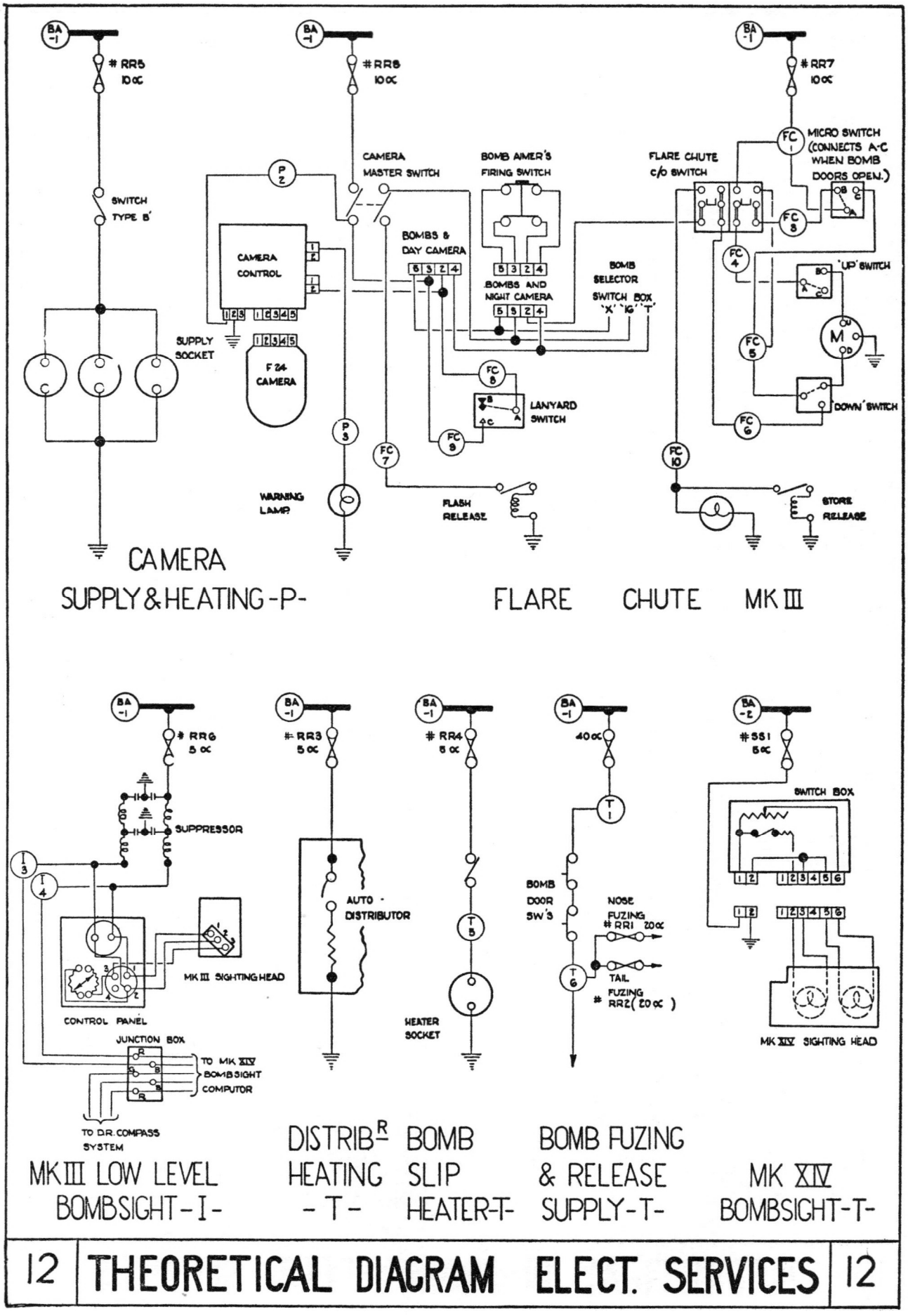

12 **THEORETICAL DIAGRAM ELECT. SERVICES** 12

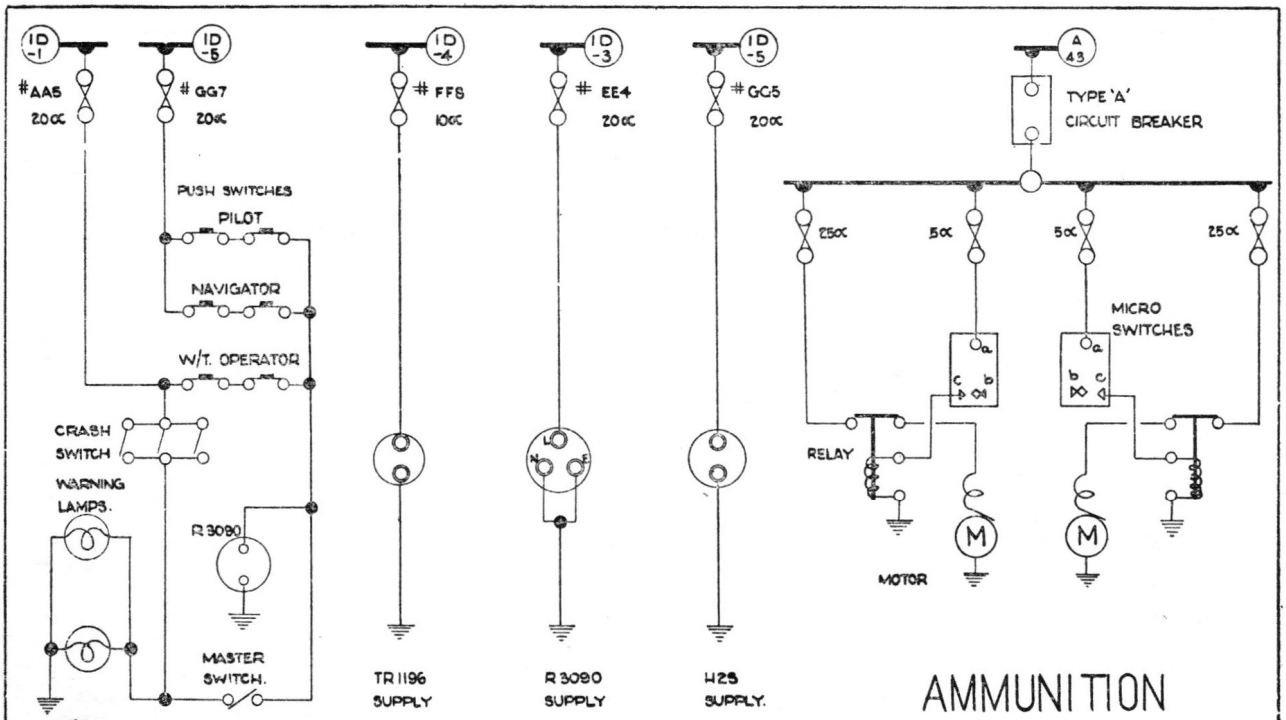

W/T DEMOLITION & SUPPLIES -WD-

AMMUNITION ASSISTOR PANELS

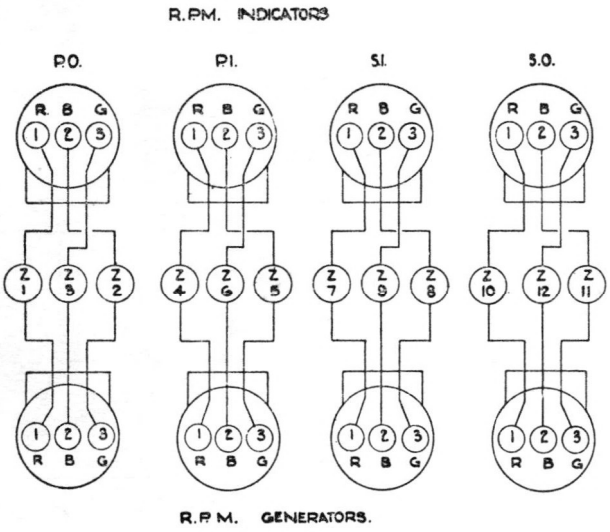

ENGINE SPEED INDICATORS -Z-

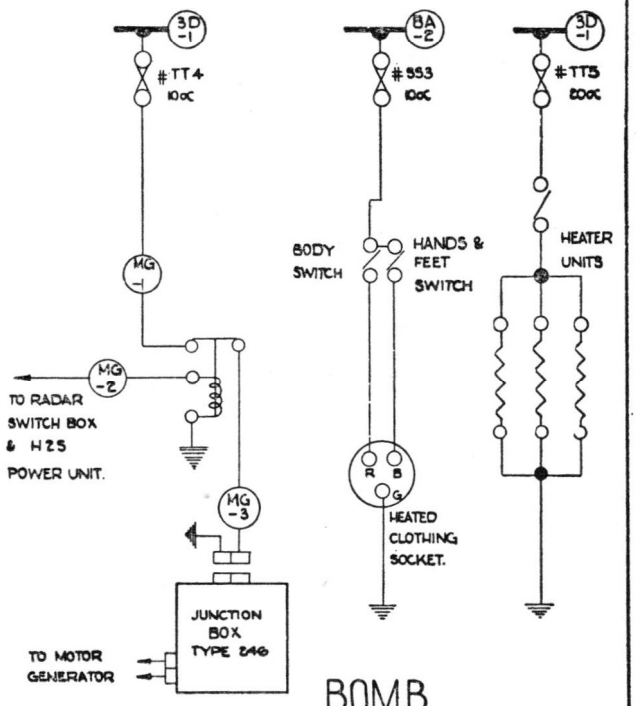

MOTOR GENERATOR FOR SCANNING UNIT -MG-

BOMB AIMERS HEATED CLOTHING -HE-

SCANNING UNIT HEATER -HS-

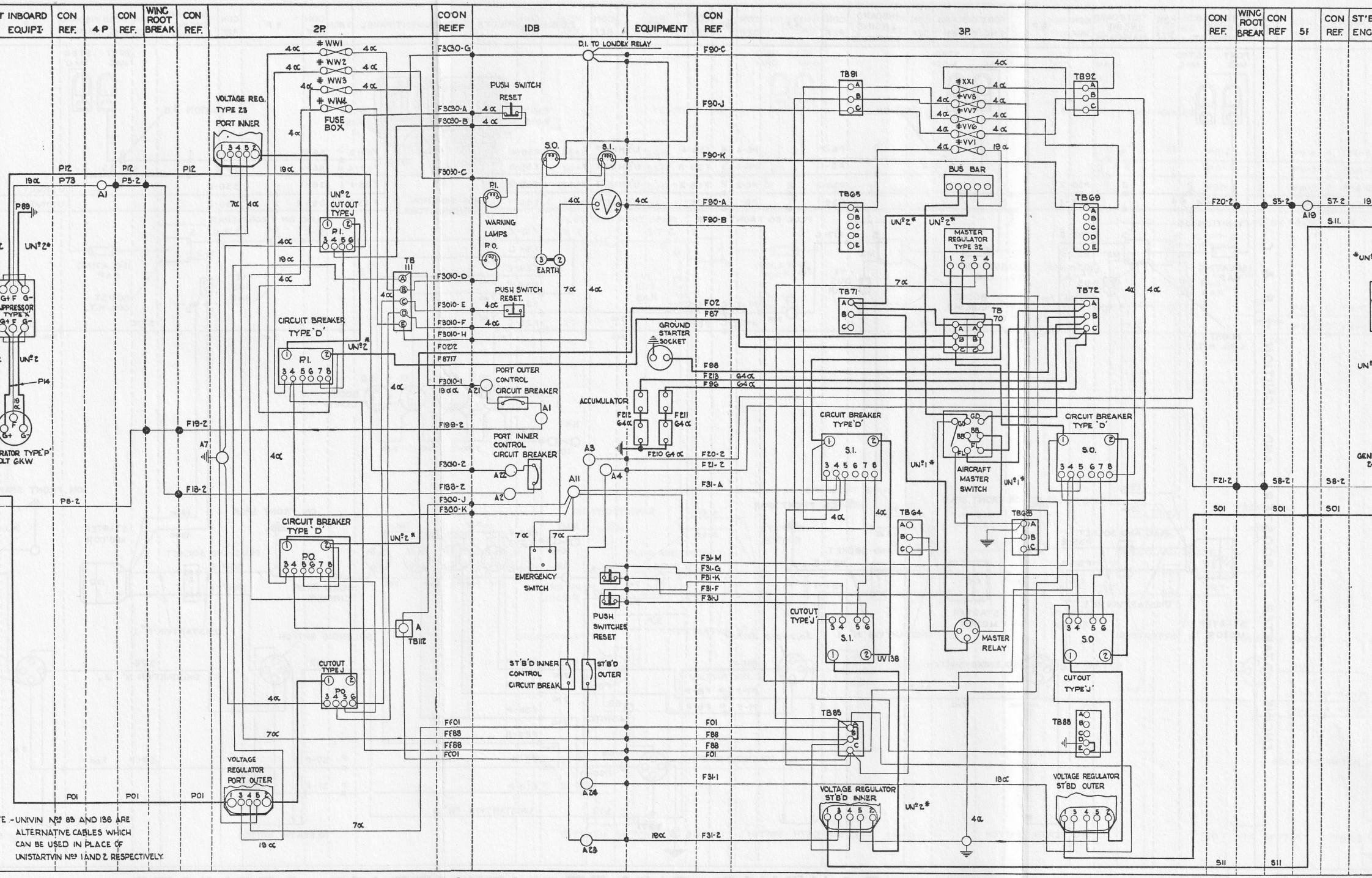

NOTE - UNIVIN Nos 89 AND 138 ARE ALTERNATIVE CABLES WHICH CAN BE USED IN PLACE OF UNISTARTVIN Nos 1 AND 2 RESPECTIVELY.

ROUTING CHART — GENERAL SERVICES

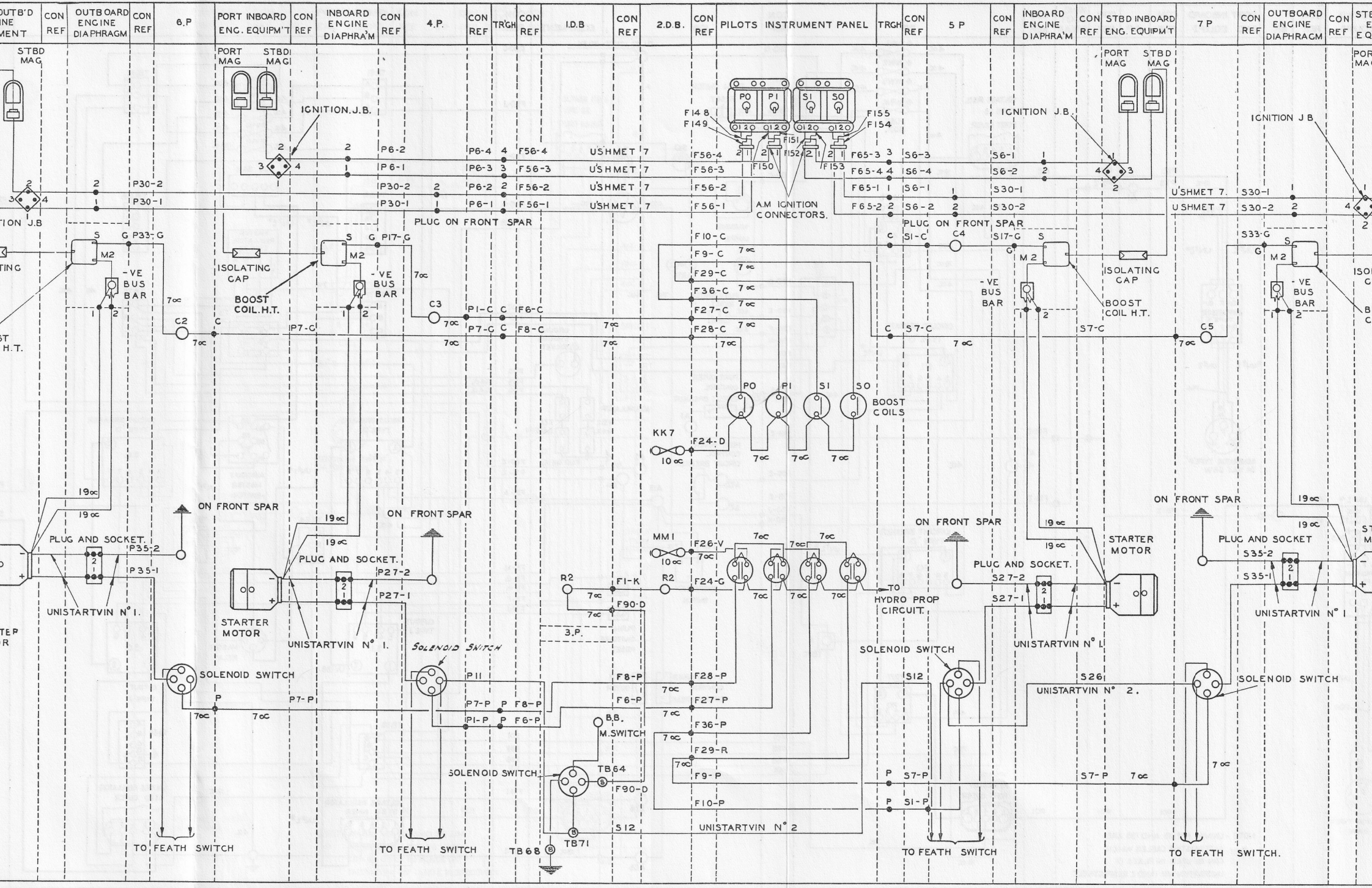

ROUTING CHART GENERAL SERVICES

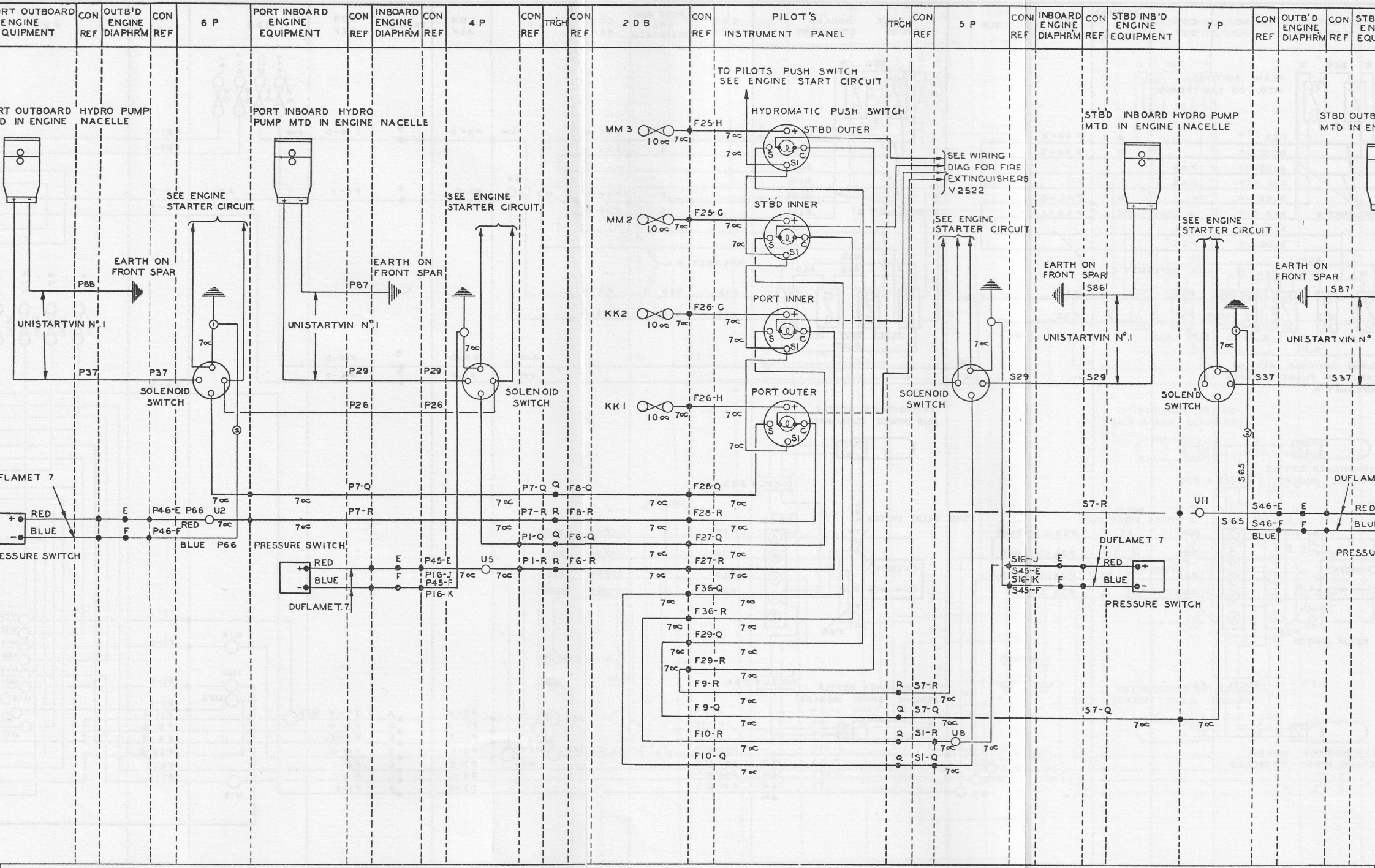

ROUTING CHART GENERAL SERVICES

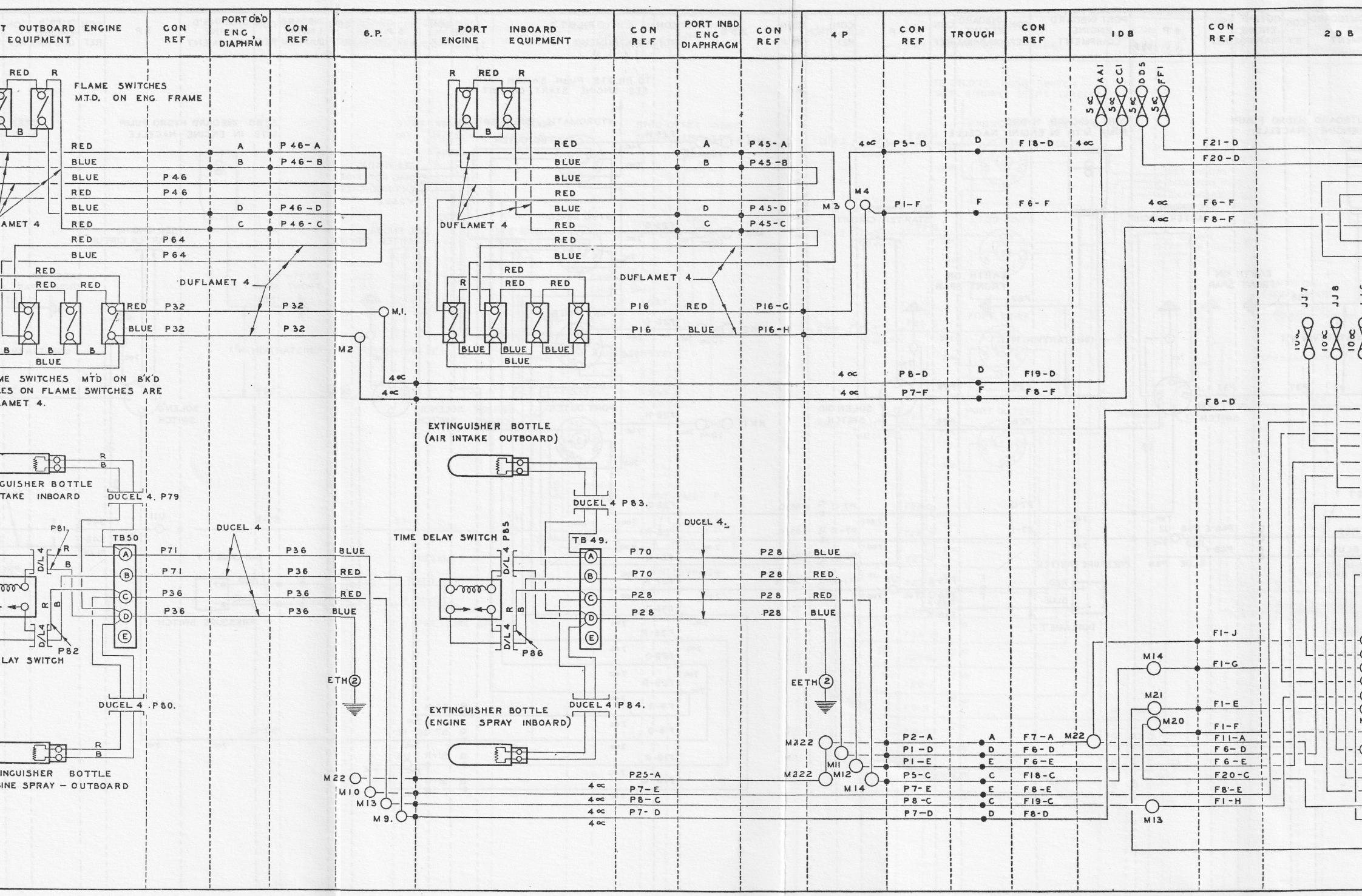

ROUTING CHAR

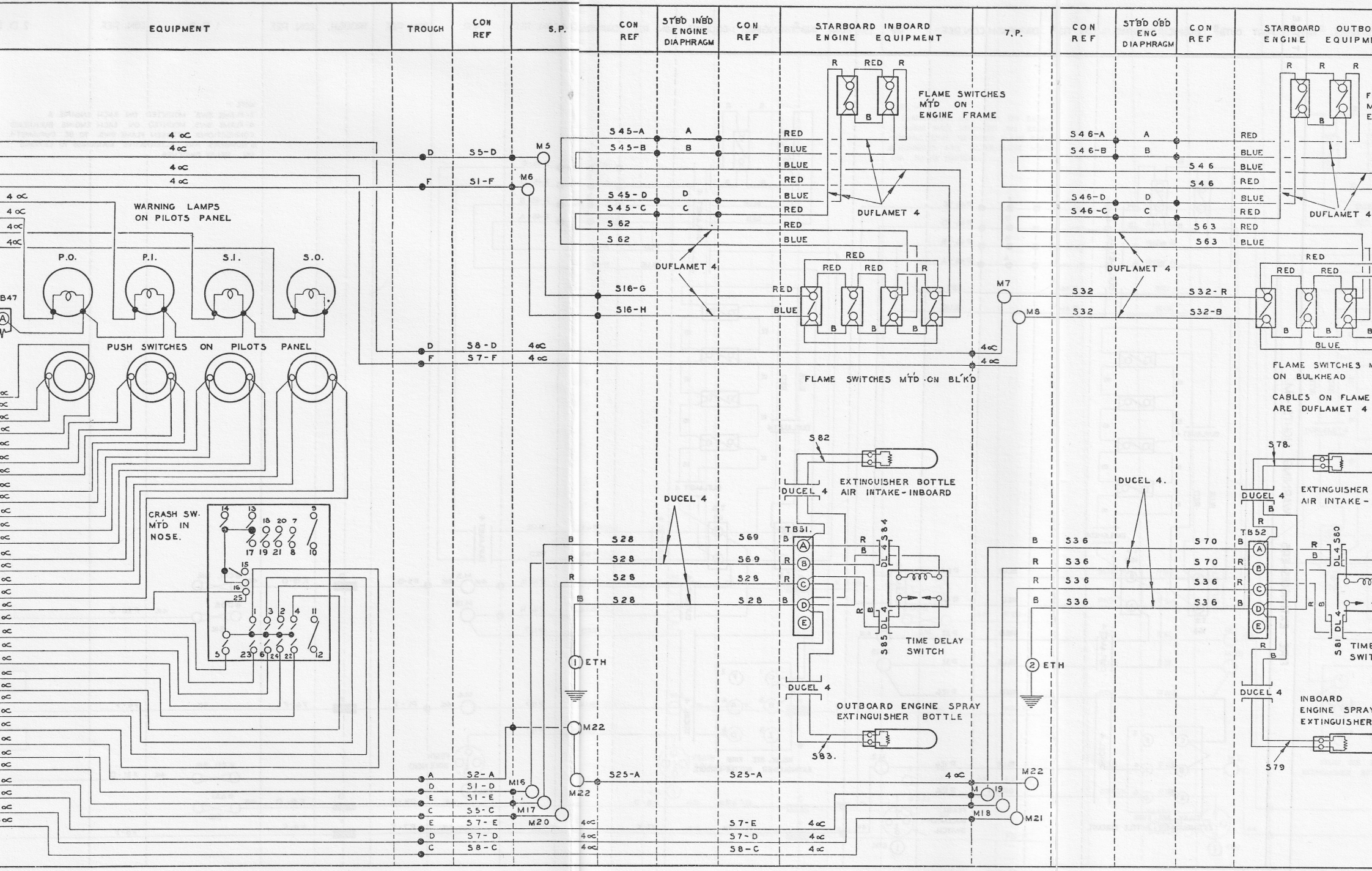

ERAL SERVICES

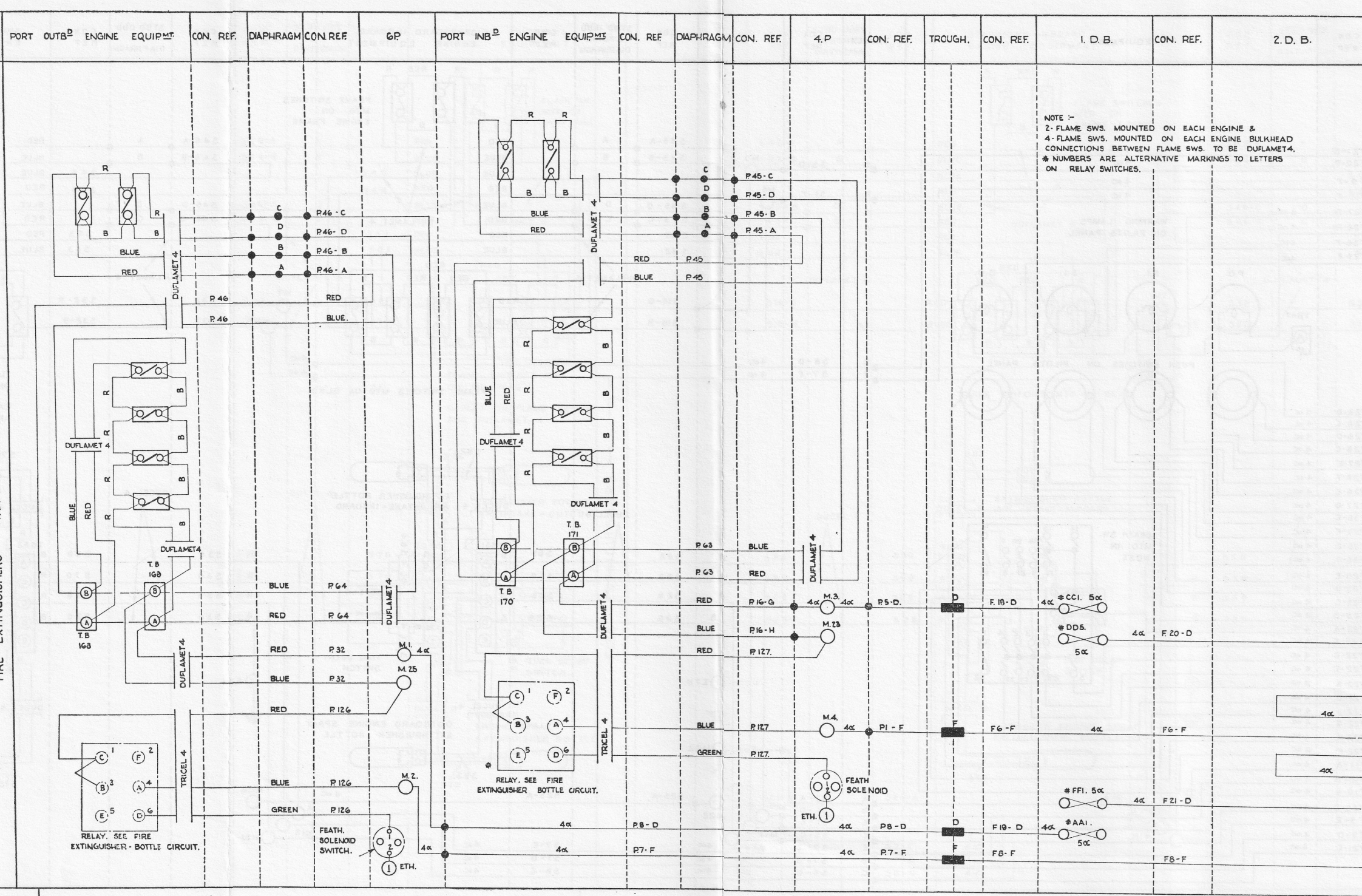

ROUTING CHART

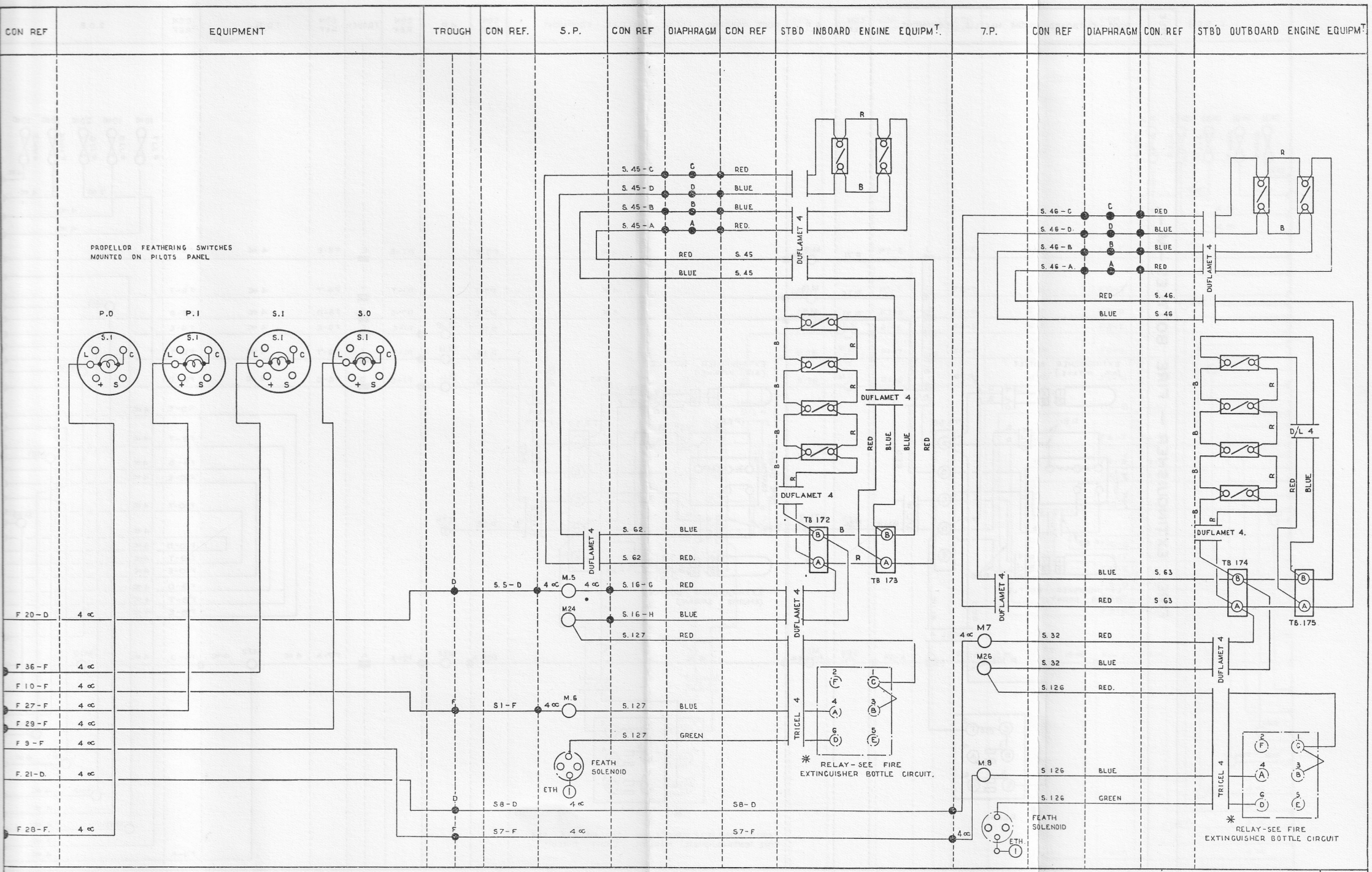

GENERAL SERVICES

17A

FIRE EXTINGUISHER — FIRE BOTTLES - M -.

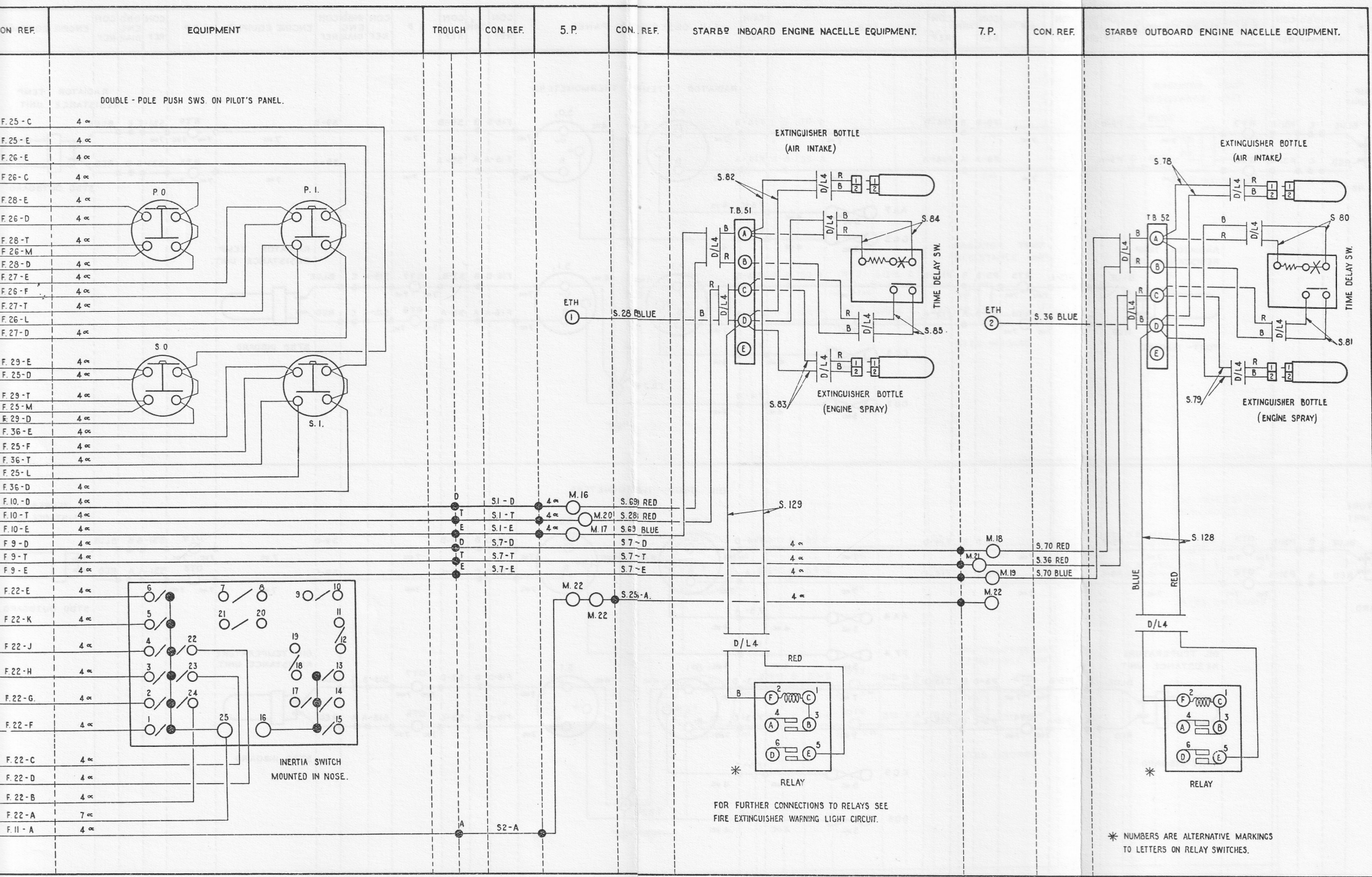

GENERAL SERVICES.

17B

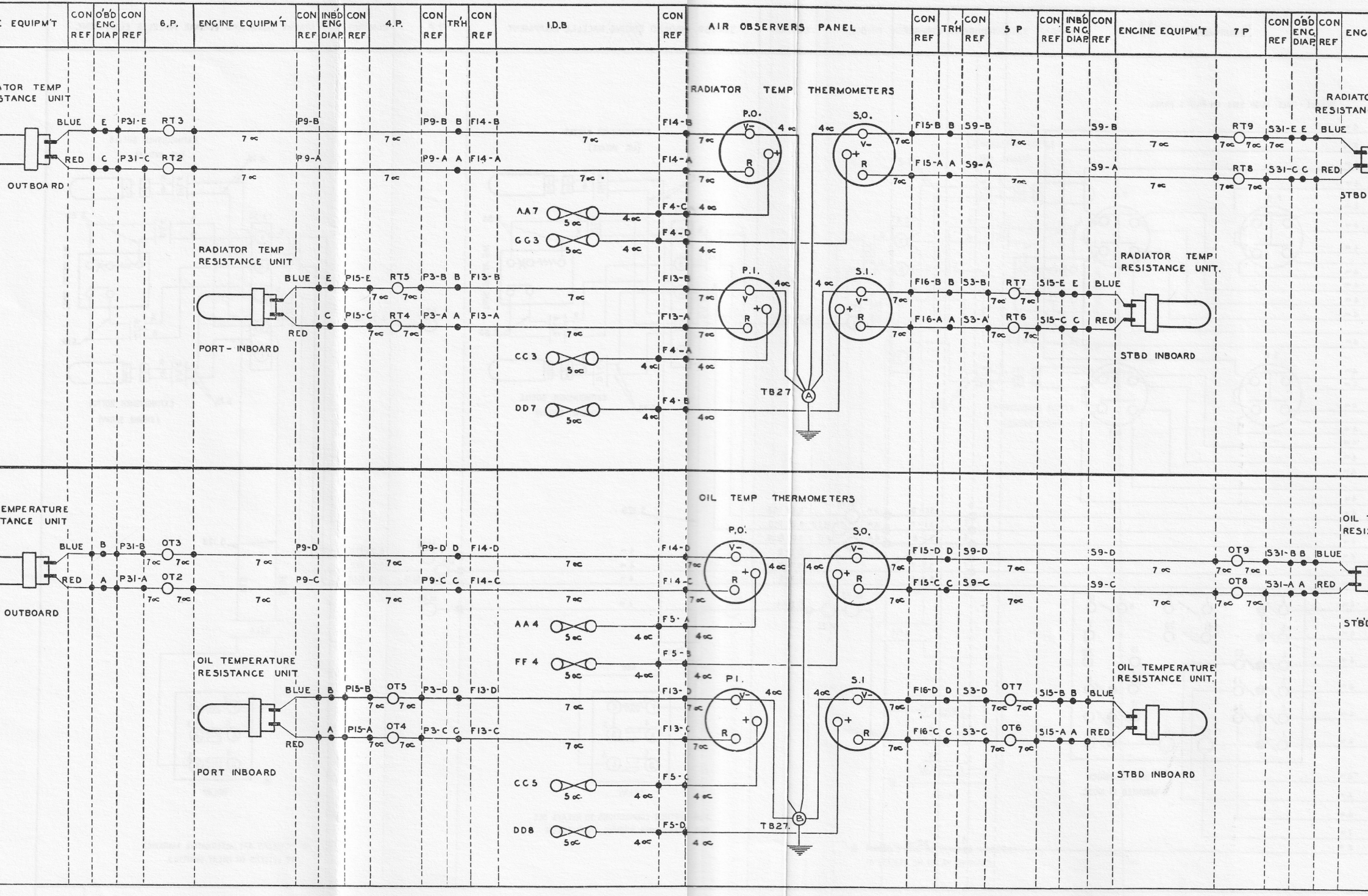

ROUTING CHART GENERAL SERVICES

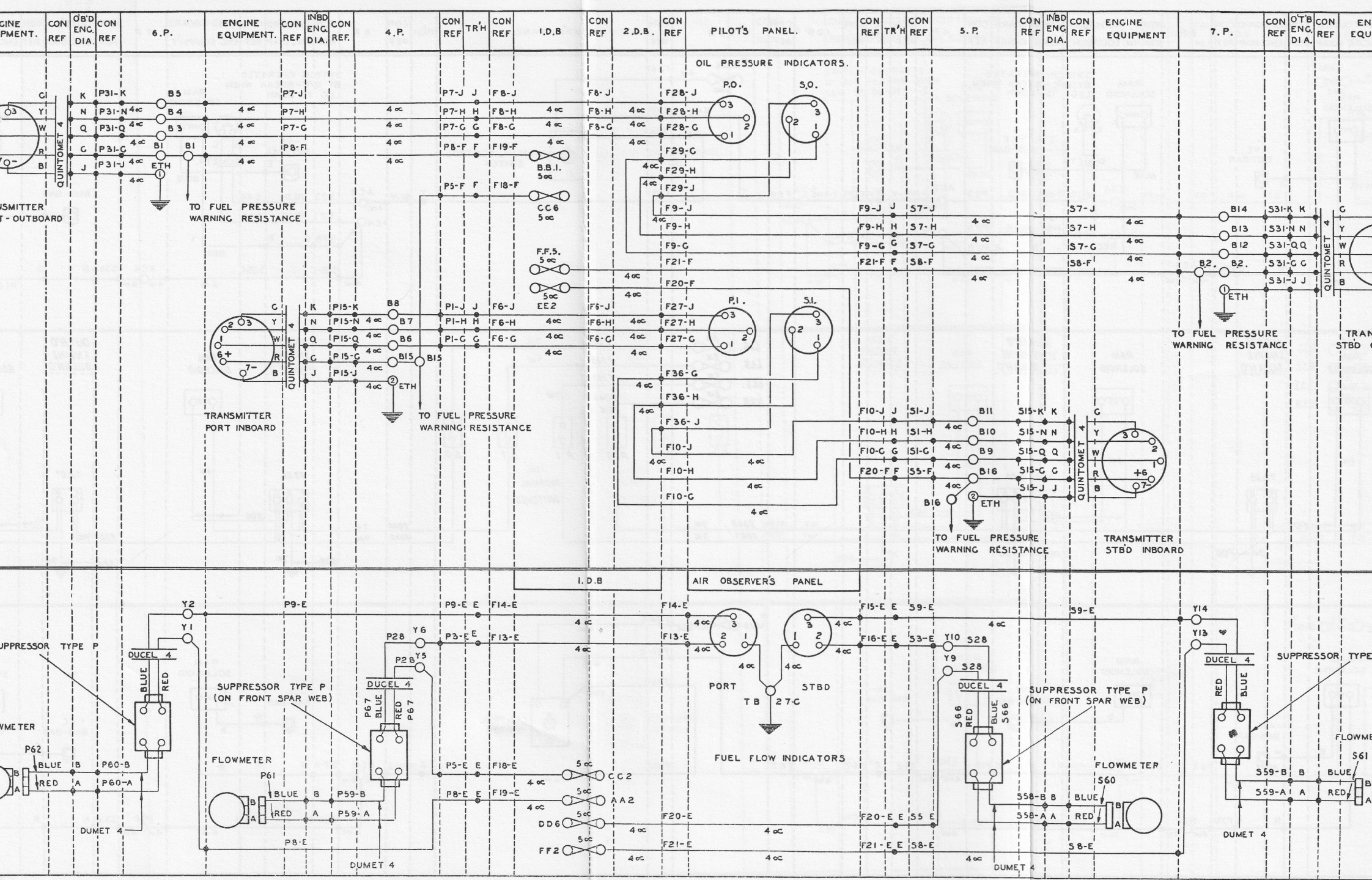

ROUTING CHART GENERAL SERVICES

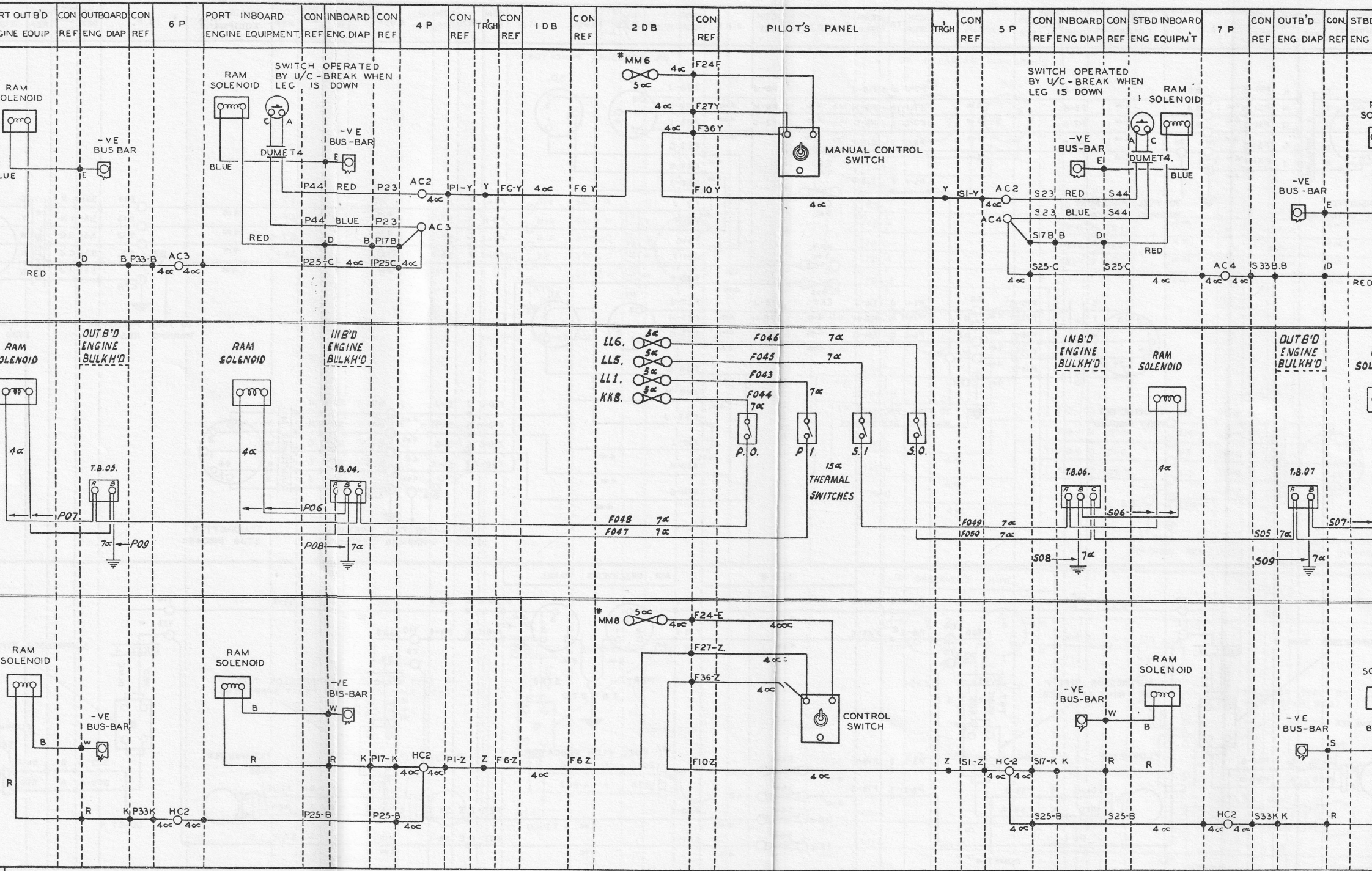

ROUTING CHART GENERAL SERVICES

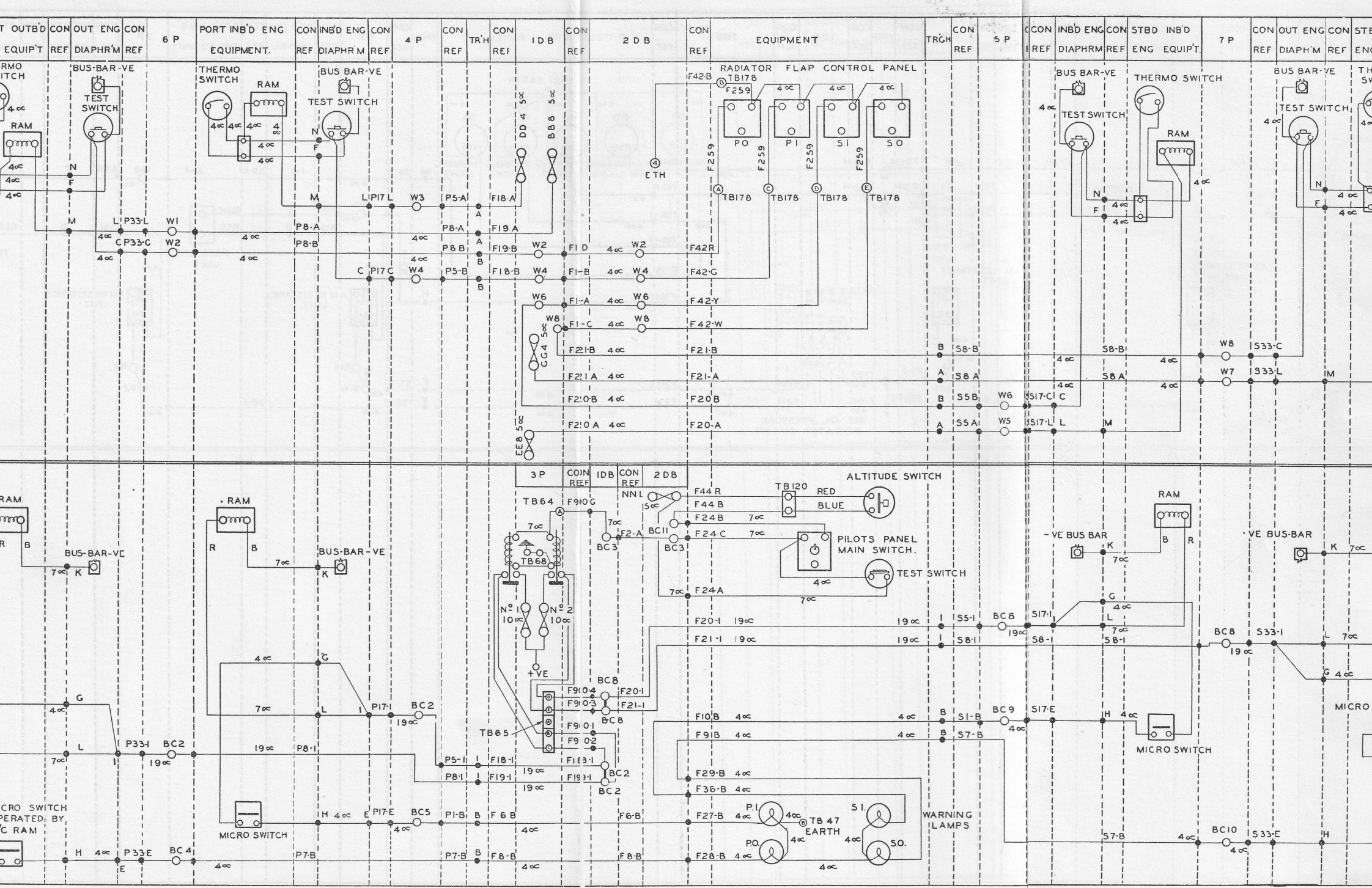

ROUTING CHART GENERAL SERVICES

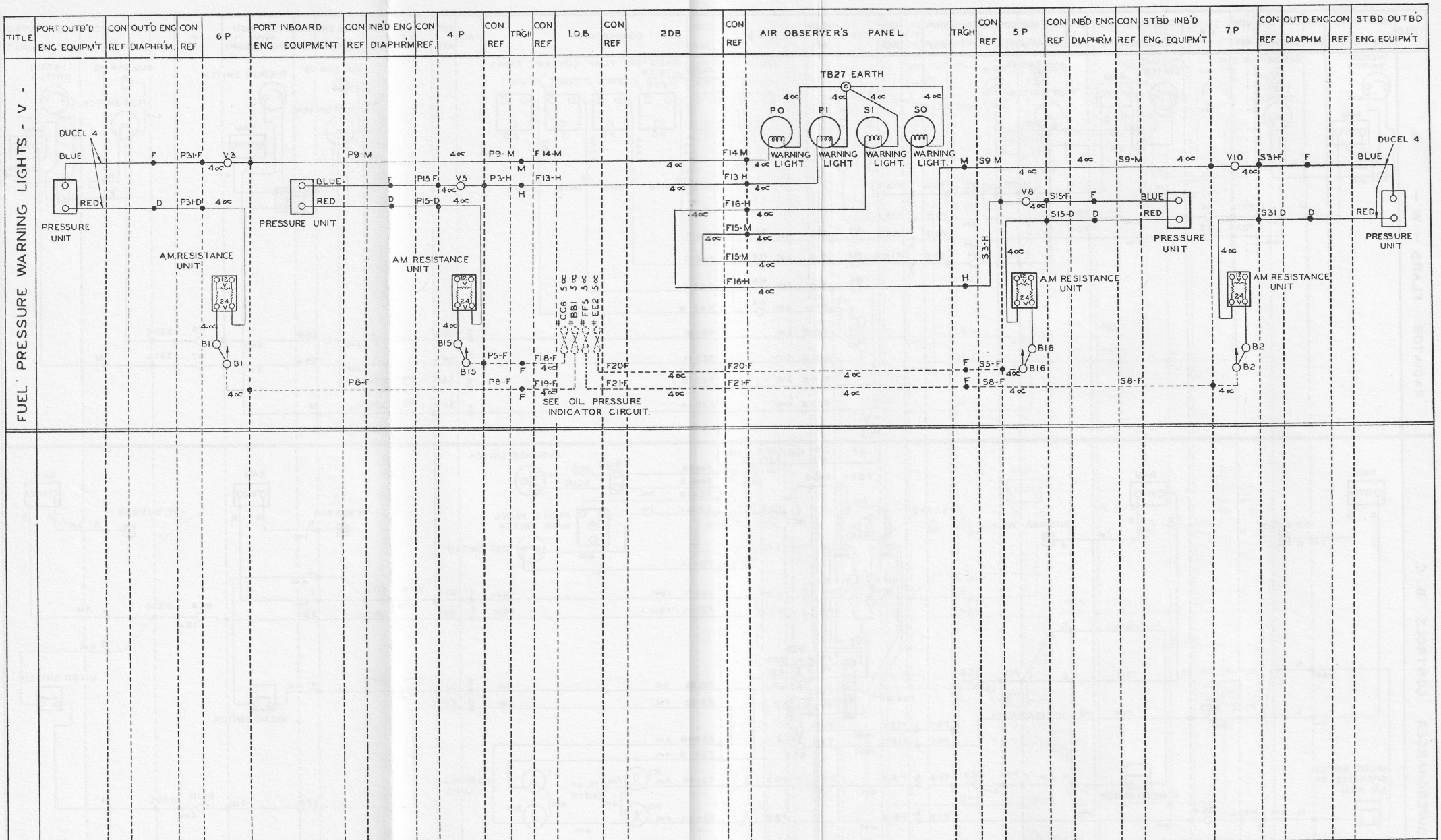

ROUTING CHART GENERAL SERVICES

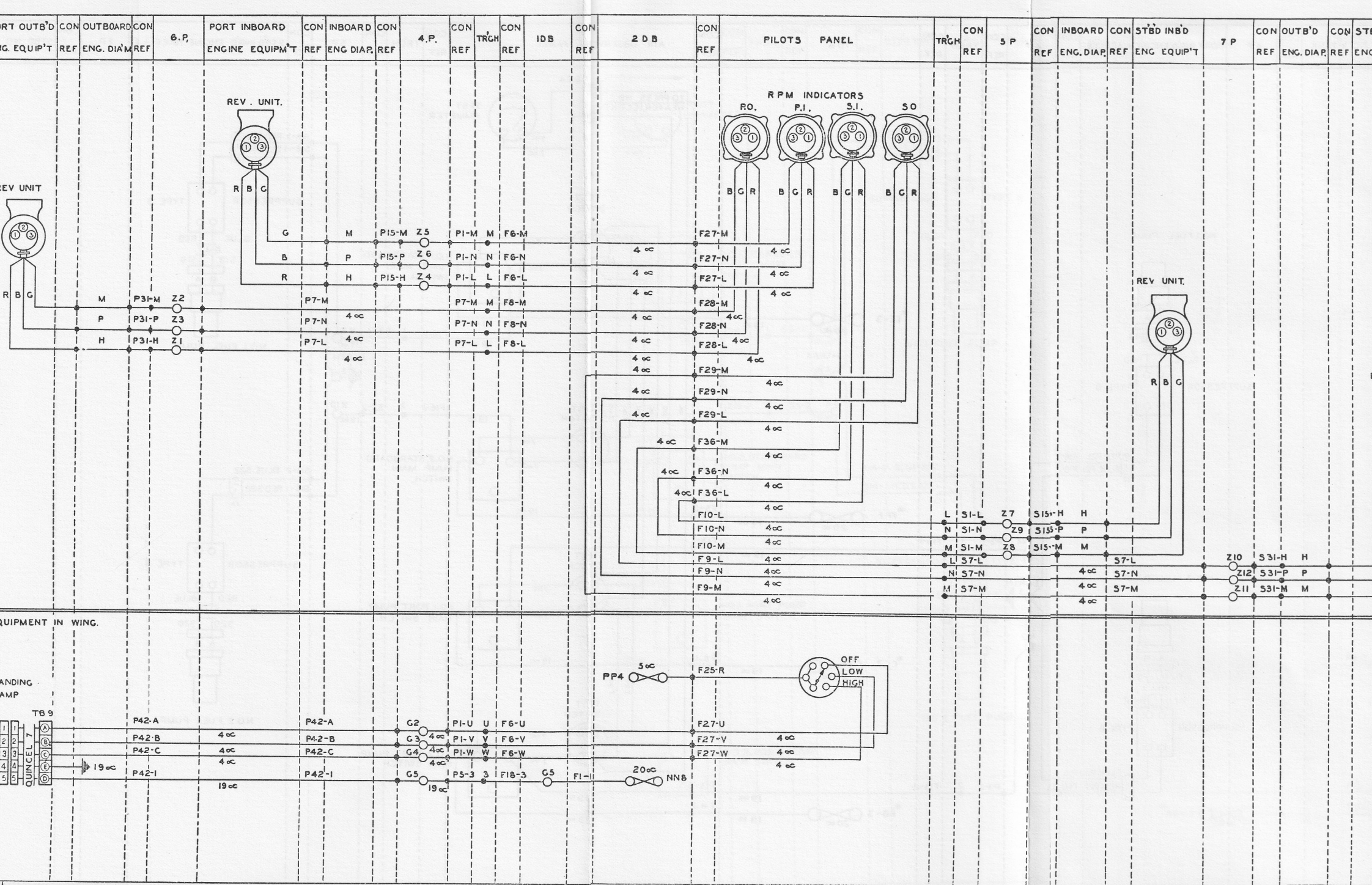

ROUTING CHART GENERAL SERVICES

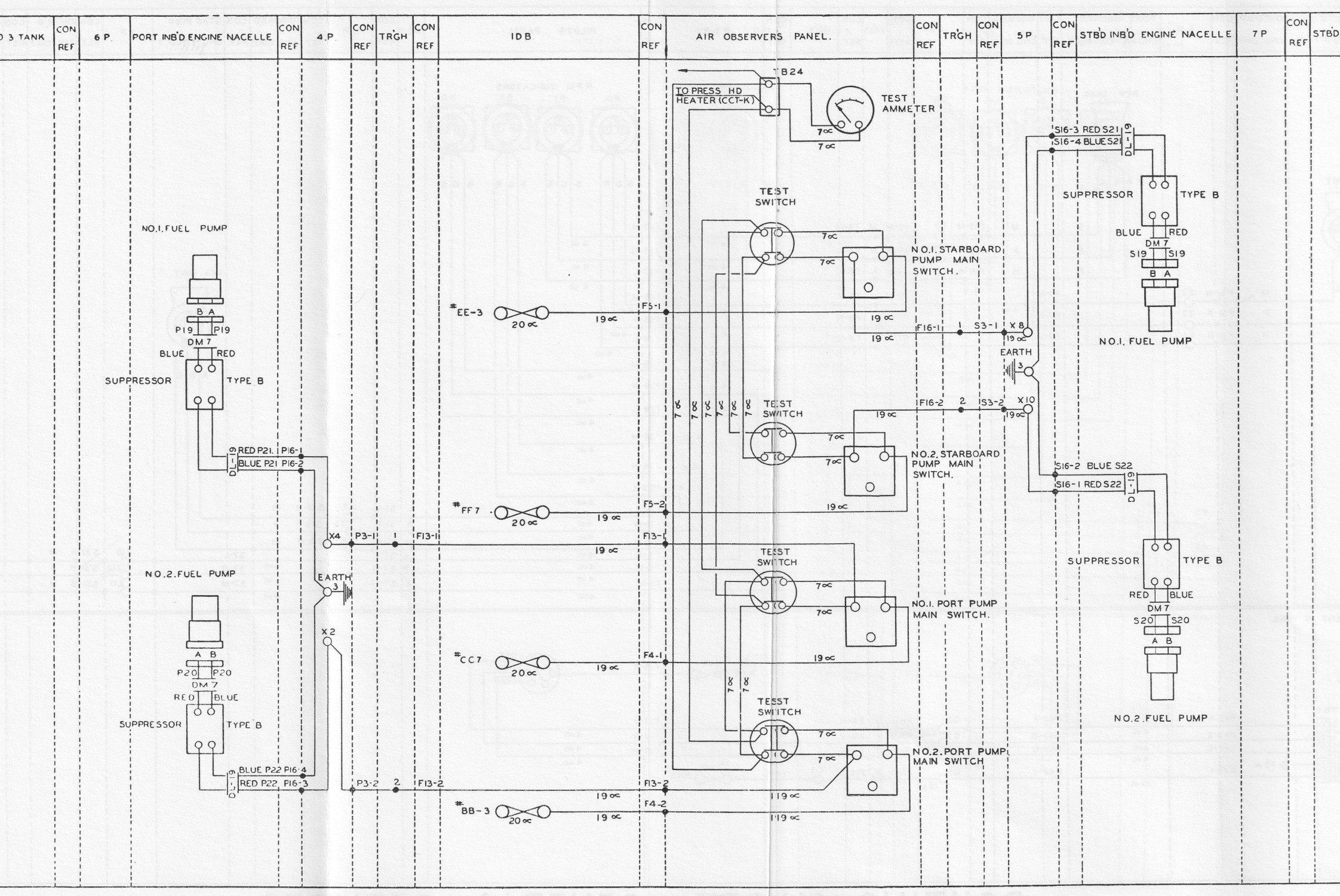

ROUTING CHART GENERAL SERVICES

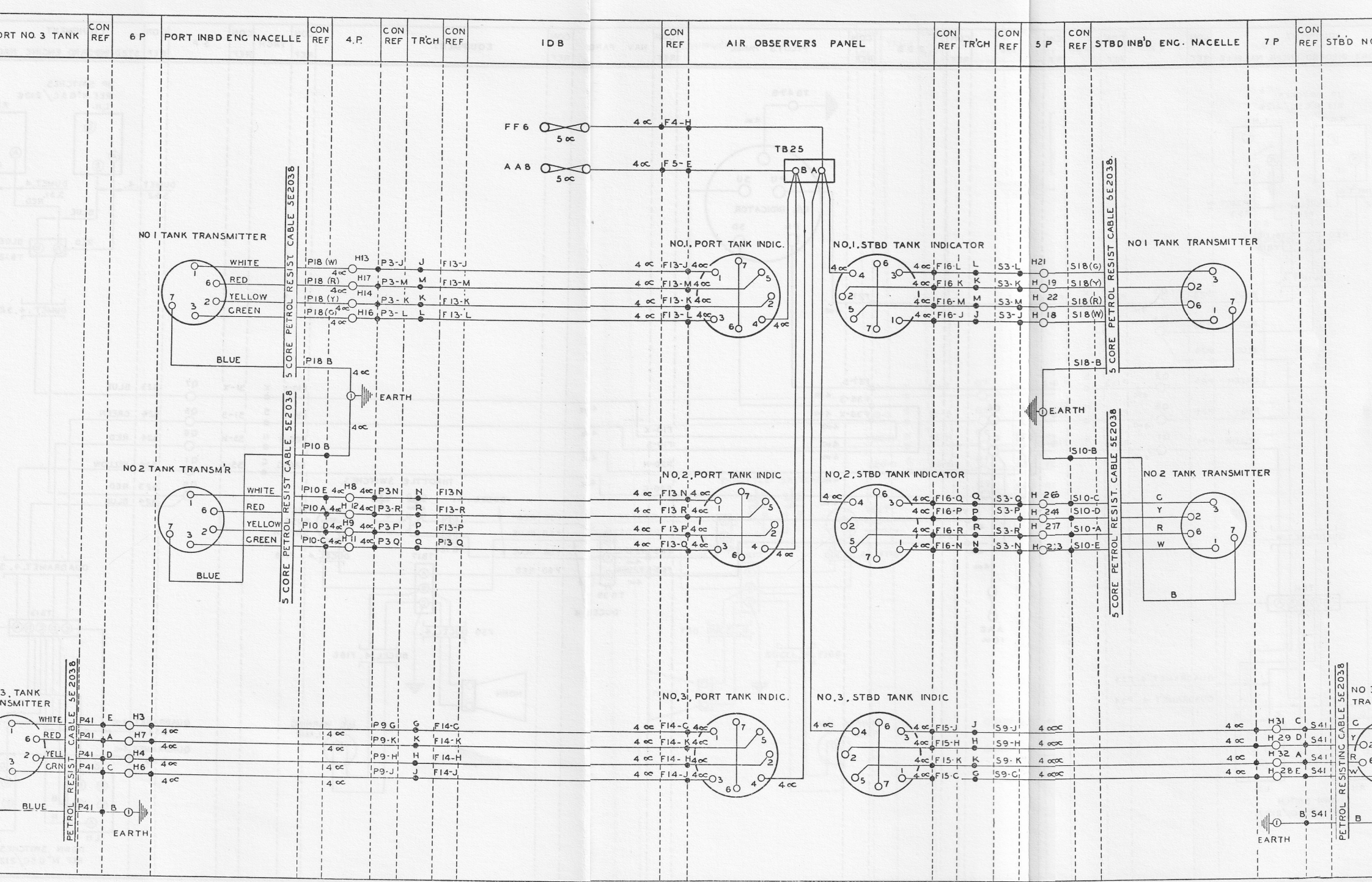

ROUTING CHART GENERAL SERVICIES

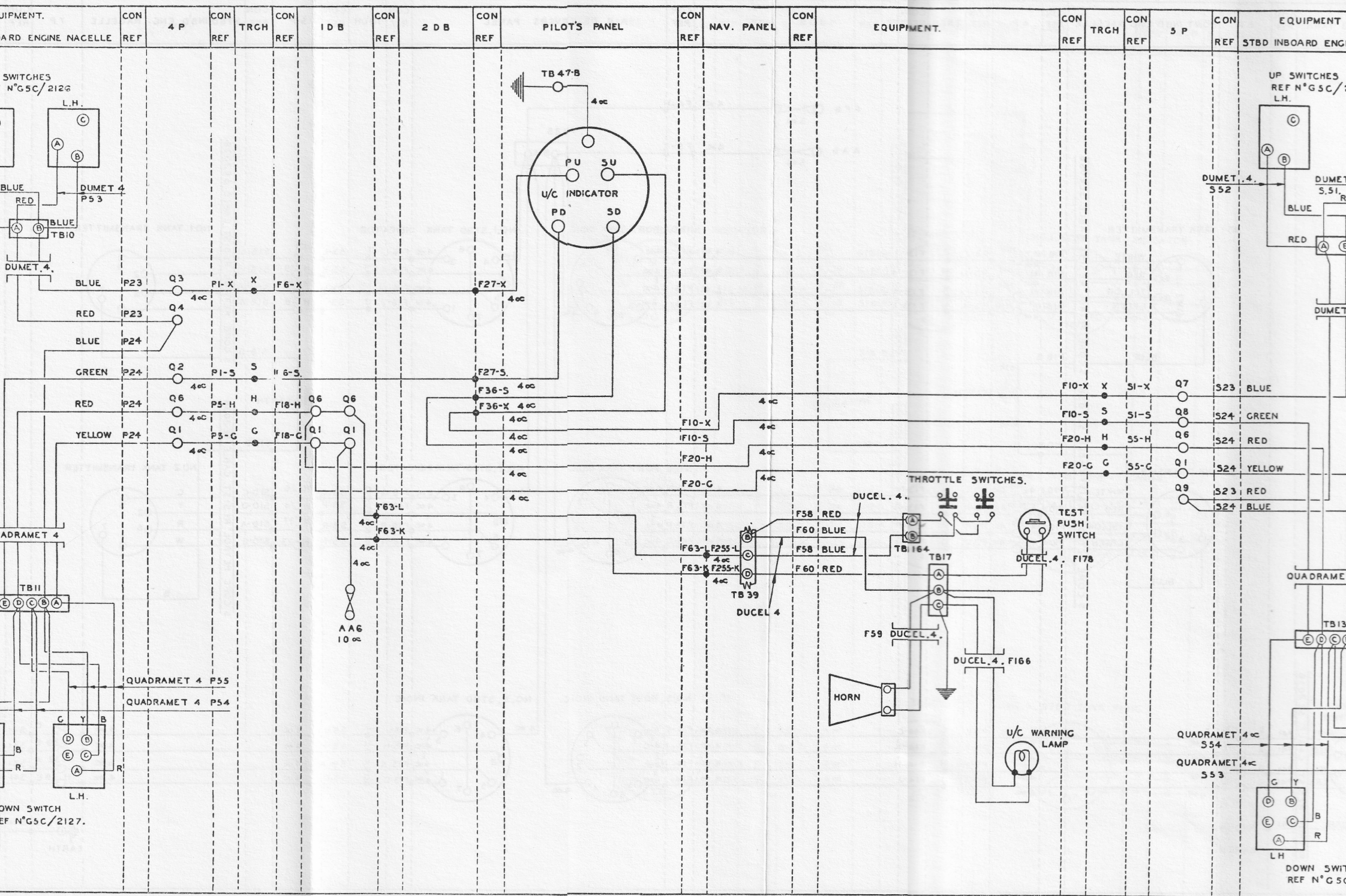

ROUTING CHART GENERAL SERVICES

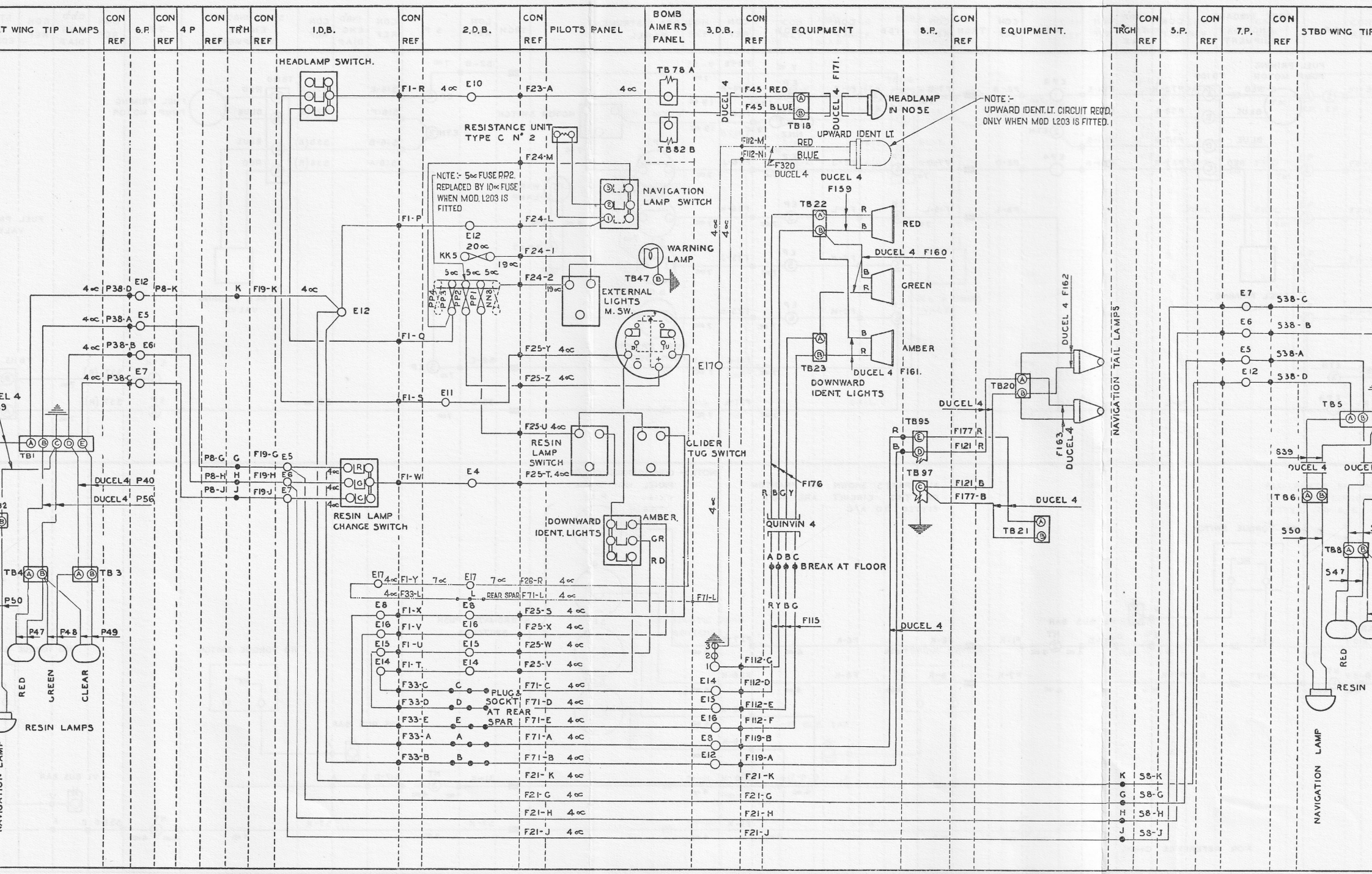

ROUTING CHART GENERAL SERVICES

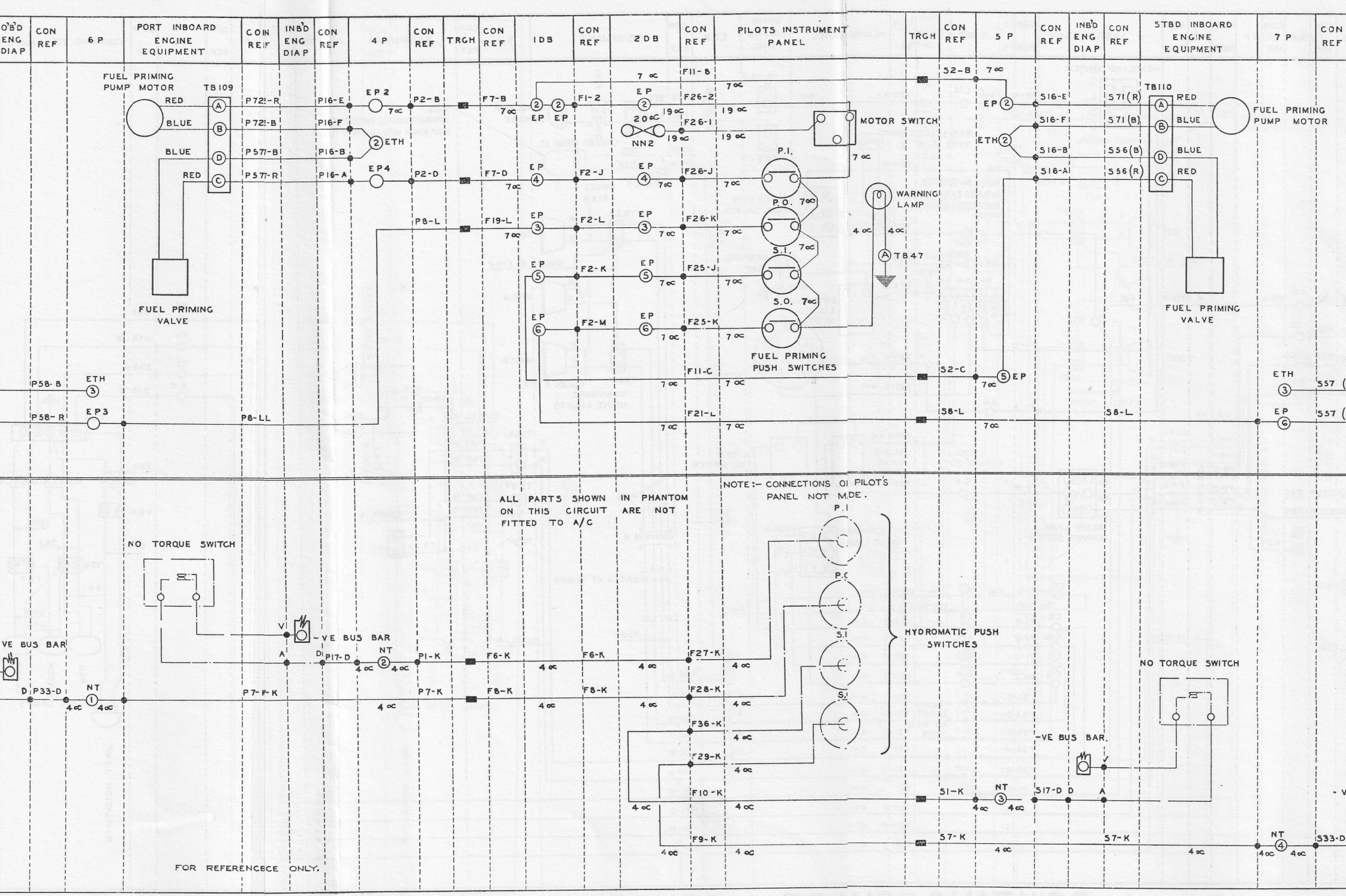

ROUTING CHART GENERAL SERVICES

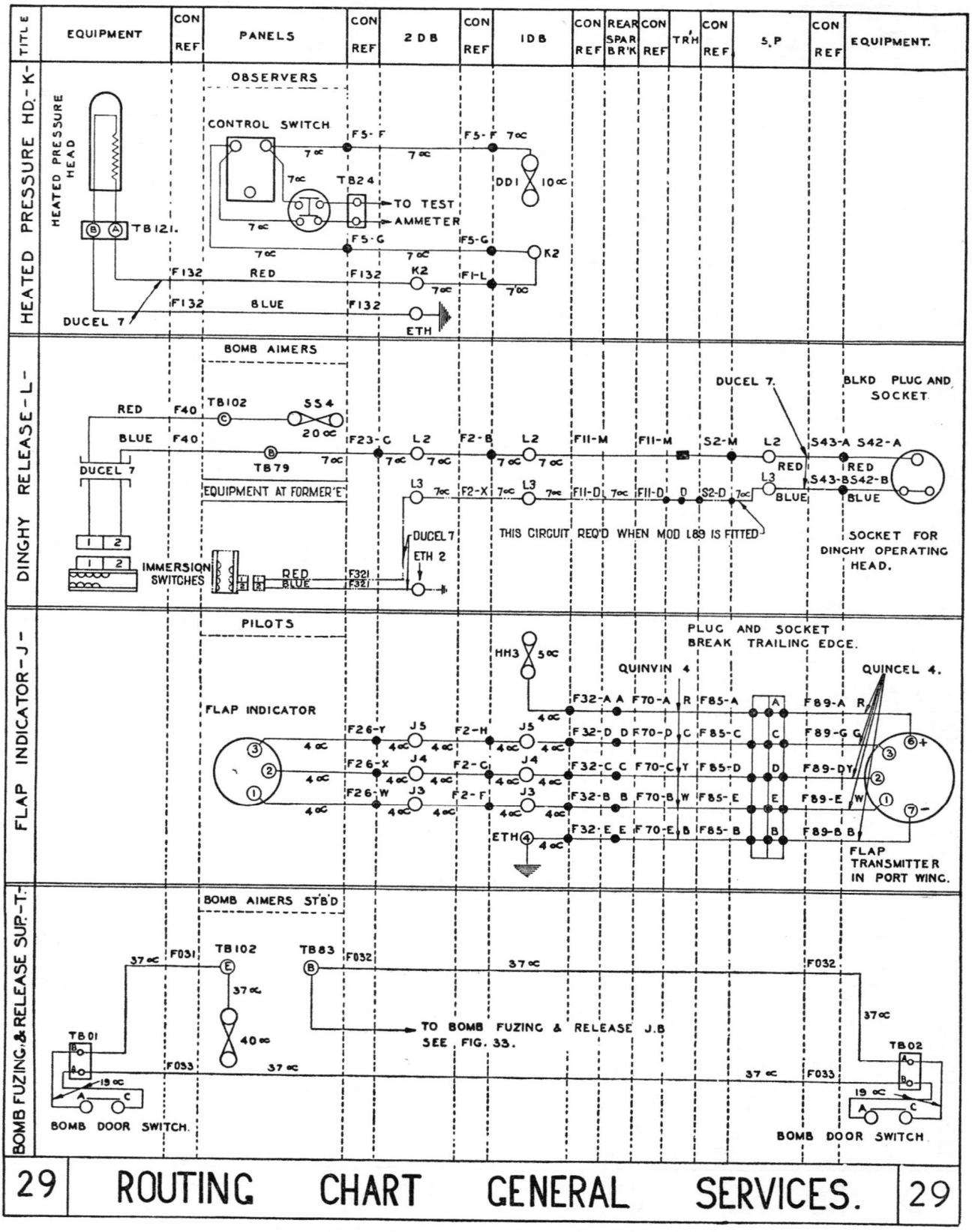
TITLE
EQUIPMENT
CON REF
PANELS
CON REF
2 D B
CON REF
I D B
CON REF
REAR SPAR BR'K
CON REF
TRH
CON REF
S.P
CON REF
EQUIPMENT.
HEATED PRESSURE HD.-K-
HEATED PRESSURE HEAD
OBSERVERS
CONTROL SWITCH
TB121.
TB824
TO TEST AMMETER
DDI
K2
DUCEL 7
ETH
DINGHY RELEASE-L-
BOMB AIMERS
TB102
SS4
TB879
EQUIPMENT AT FORMER'E'
IMMERSION SWITCHES
DUCEL 7
ETH 2
THIS CIRCUIT REQ'D WHEN MOD L89 IS FITTED
BLKD PLUG AND SOCKET
SOCKET FOR DINGHY OPERATING HEAD.
FLAP INDICATOR-J-
PILOTS
FLAP INDICATOR
HH3
QUINVIN 4
QUINCEL 4.
PLUG AND SOCKET BREAK TRAILING EDGE.
FLAP TRANSMITTER IN PORT WING.
BOMB FUZING & RELEASE SUP.-T-
BOMB AIMERS STB'D
TB101
TB102
TB83
TO BOMB FUZING & RELEASE J.B SEE FIG. 33.
TB102
BOMB DOOR SWITCH.
BOMB DOOR SWITCH
29
ROUTING CHART GENERAL SERVICES.
29

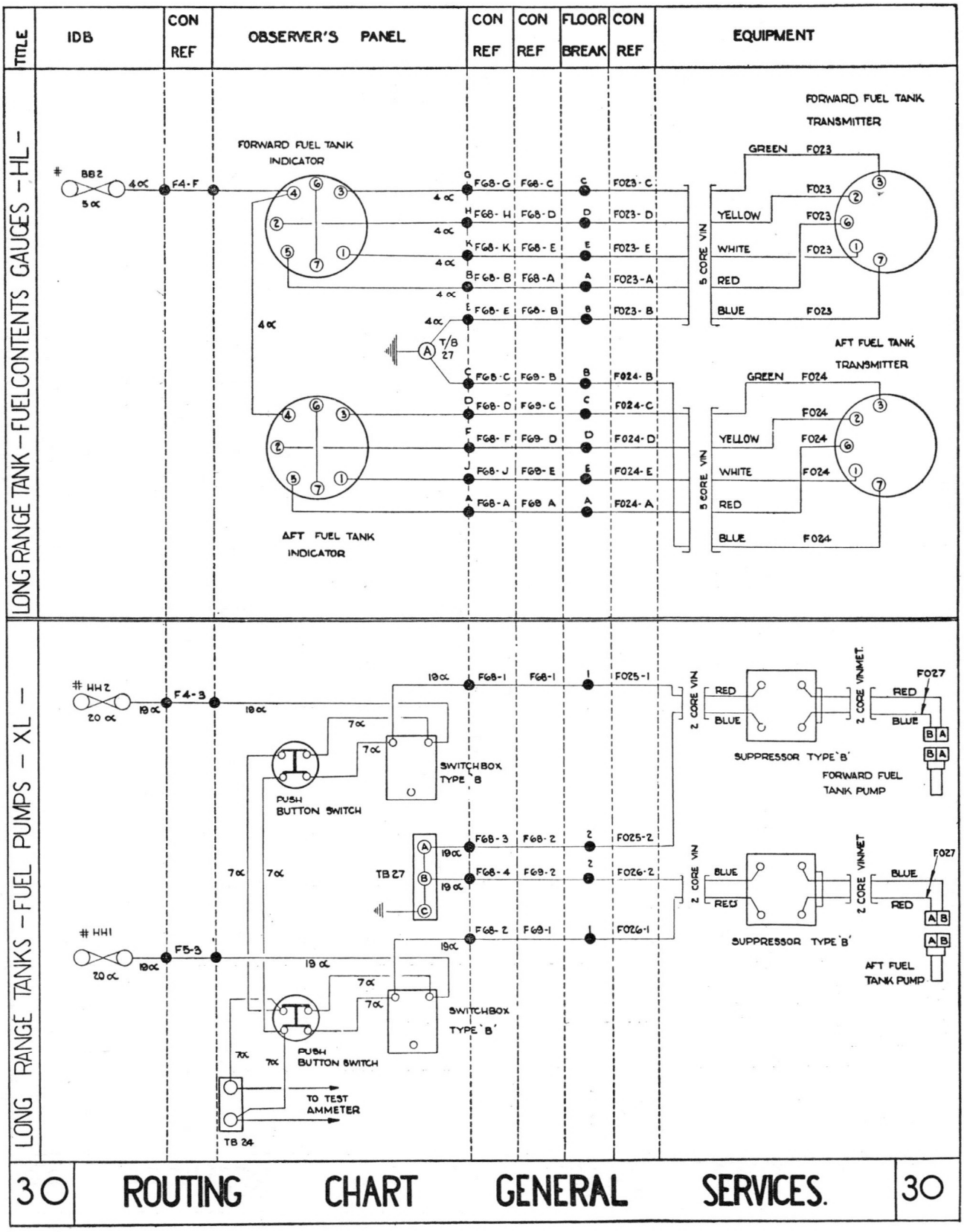
TITLE
IDB
CON REF
OBSERVER'S PANEL
CON REF
CON REF
FLOOR BREAK
CON REF
EQUIPMENT
LONG RANGE TANK – FUELCONTENTS GAUGES – HL –
FORWARD FUEL TANK INDICATOR
FORWARD FUEL TANK TRANSMITTER
AFT FUEL TANK INDICATOR
AFT FUEL TANK TRANSMITTER
5 CORE VIN
GREEN
YELLOW
WHITE
RED
BLUE
T/B 27
LONG RANGE TANKS – FUEL PUMPS – XL –
SWITCHBOX TYPE 'B'
PUSH BUTTON SWITCH
TB 27
TB 24
TO TEST AMMETER
2 CORE VIN
2 CORE VINMET.
SUPPRESSOR TYPE 'B'
FORWARD FUEL TANK PUMP
AFT FUEL TANK PUMP
30
ROUTING CHART GENERAL SERVICES.
30

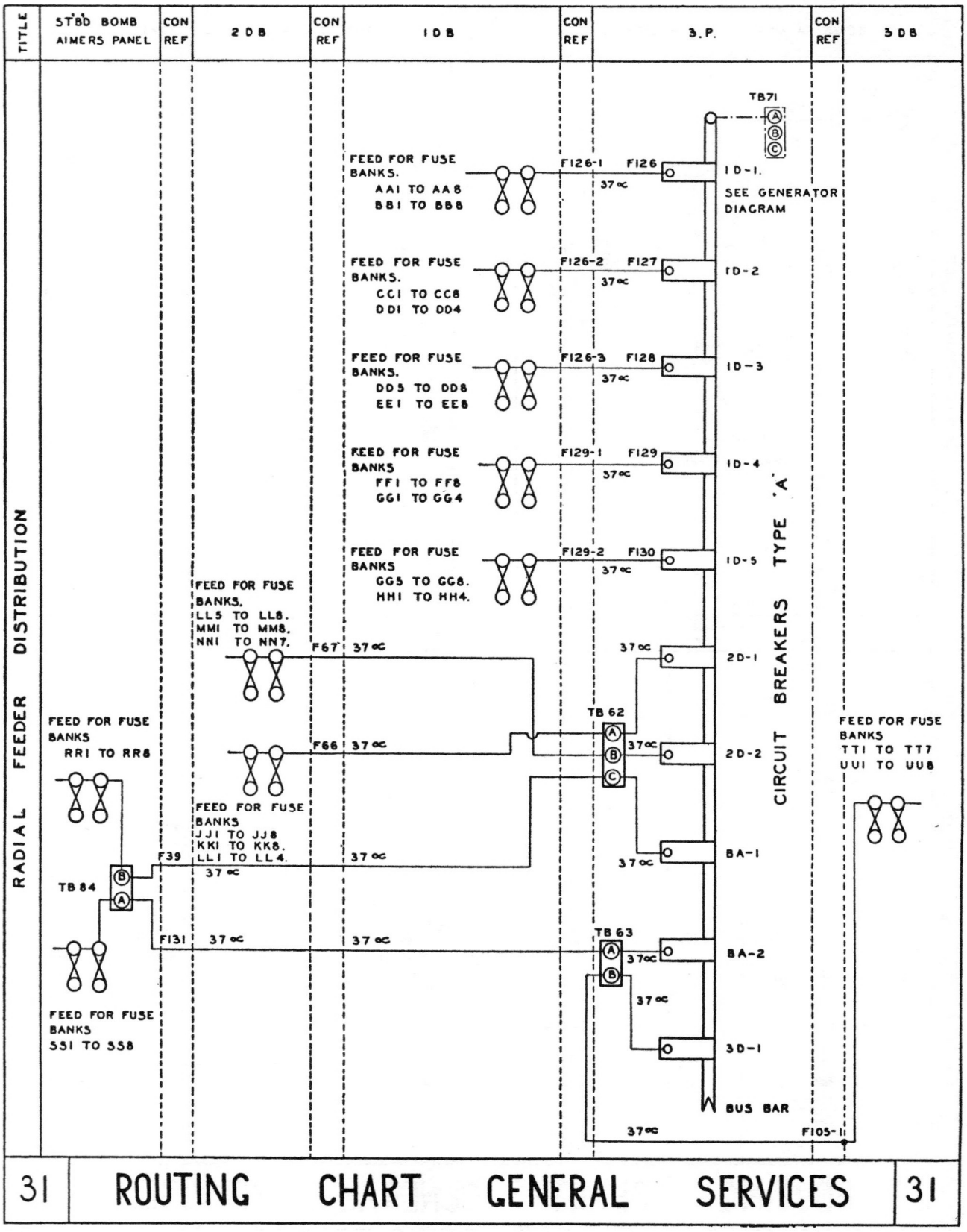

31 **ROUTING CHART GENERAL SERVICES** 31

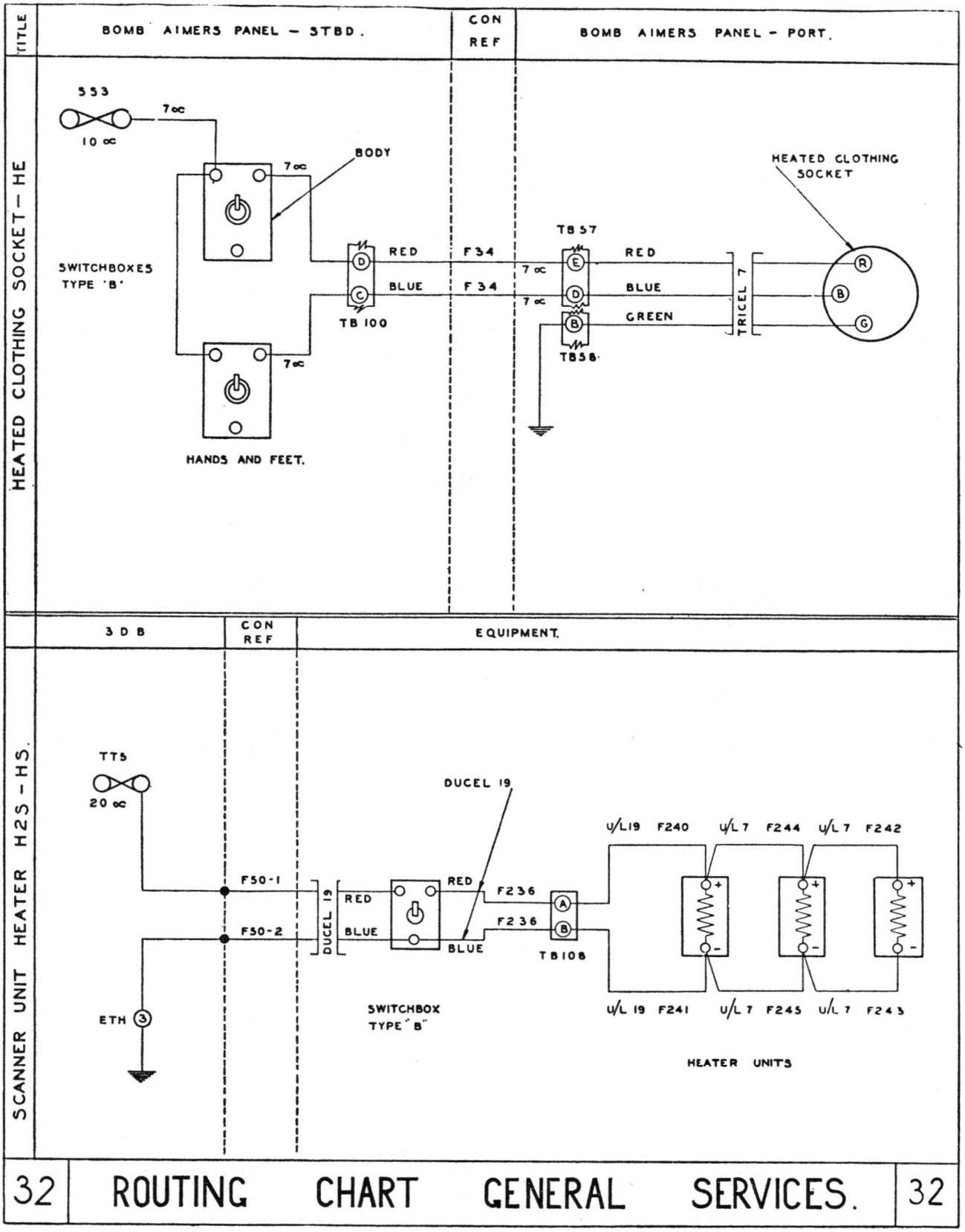
TITLE
HEATED CLOTHING SOCKET — HE
BOMB AIMERS PANEL — STBD.
CON REF
BOMB AIMERS PANEL — PORT.
553
7 oc
10 oc
BODY
7 oc
SWITCHBOXES TYPE 'B'
RED
BLUE
TB 100
F 34
F 34
TB 57
RED
BLUE
GREEN
7 oc
7 oc
TB 58
TRICEL 7
HEATED CLOTHING SOCKET
R
B
G
7 oc
HANDS AND FEET.
SCANNER UNIT HEATER H2S — HS.
3 D B
CON REF
EQUIPMENT.
TT5
20 oc
ETH
F50-1
F50-2
DUCEL 19
RED
BLUE
DUCEL 19
RED
BLUE
F236
F236
TB 108
SWITCHBOX TYPE "B"
U/L 19 F240
U/L 7 F244
U/L 7 F242
U/L 19 F241
U/L 7 F245
U/L 7 F243
HEATER UNITS

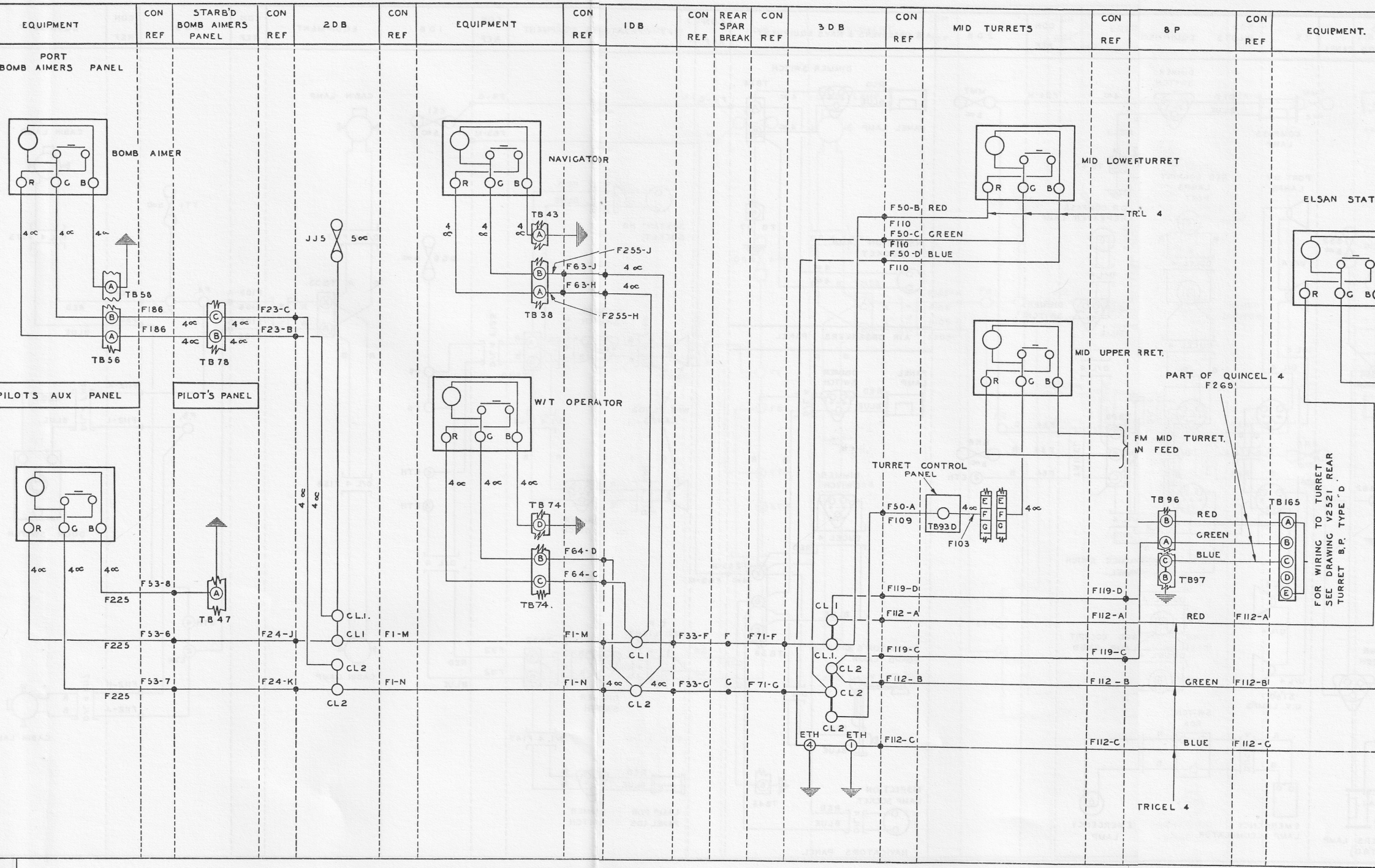

ROUTING CHART GENERAL SERVICES

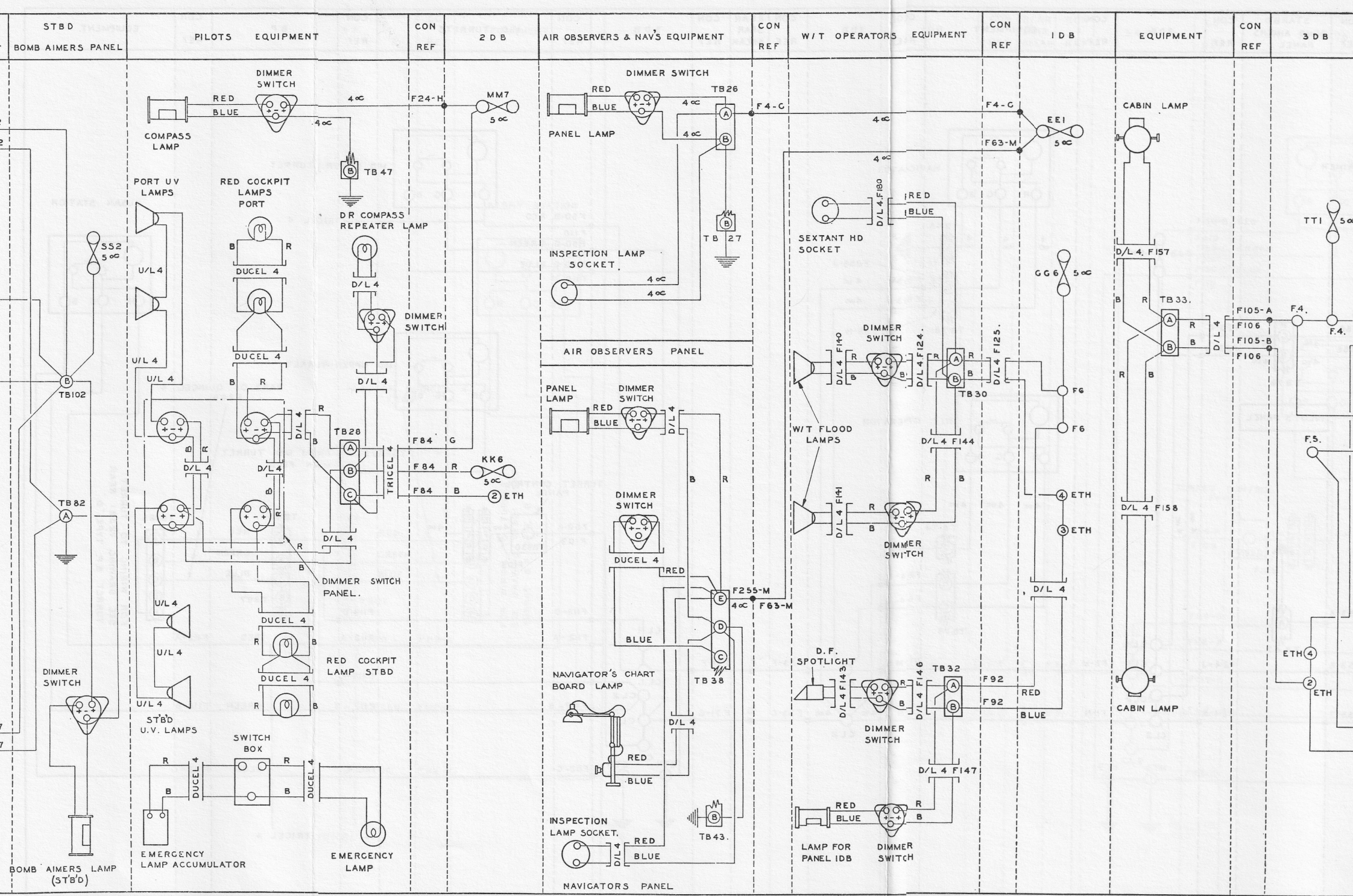

ROUTING CHART GENERAL SERVICES

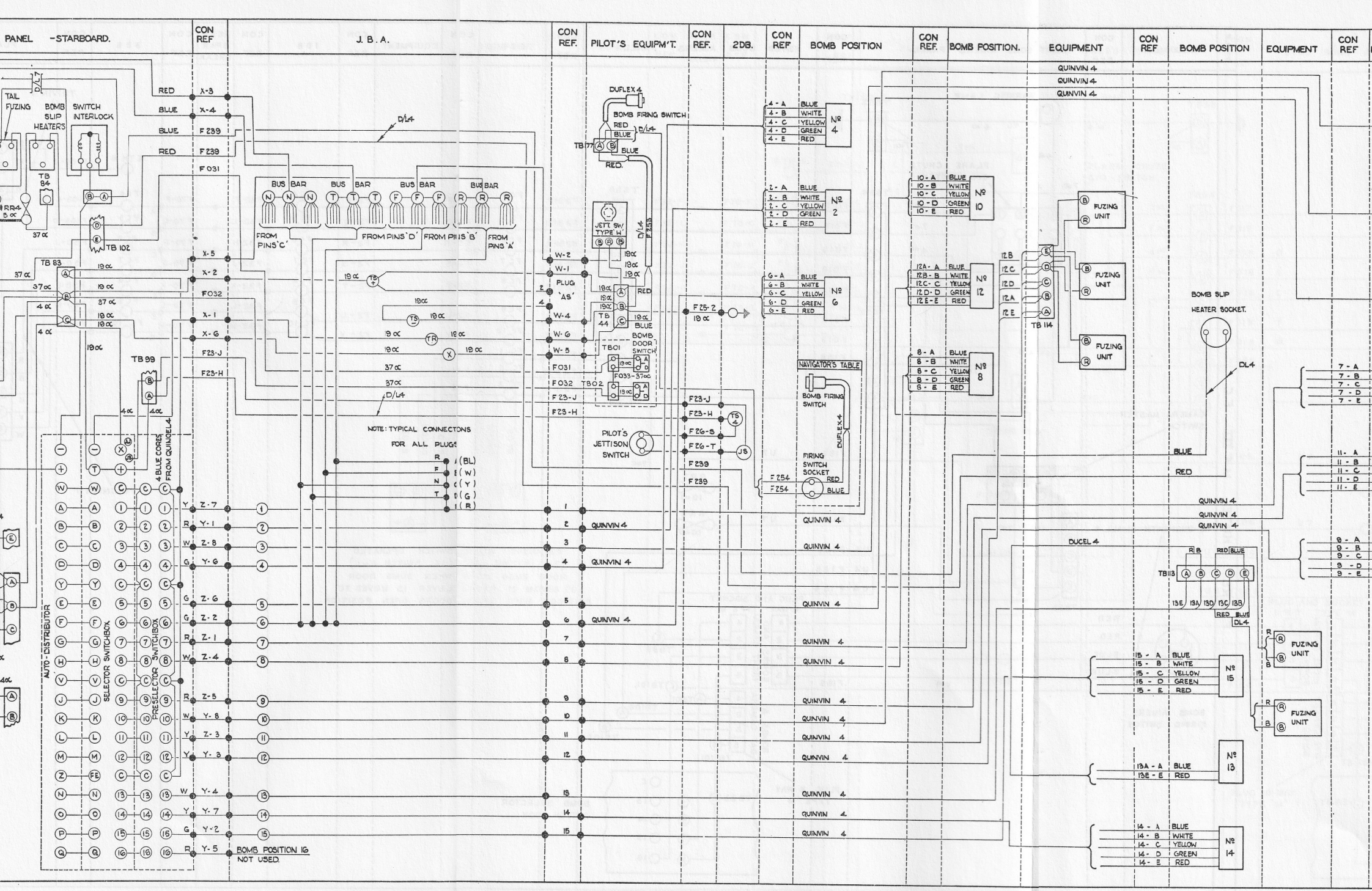

ROUTING CHART GENERAL SERVICES

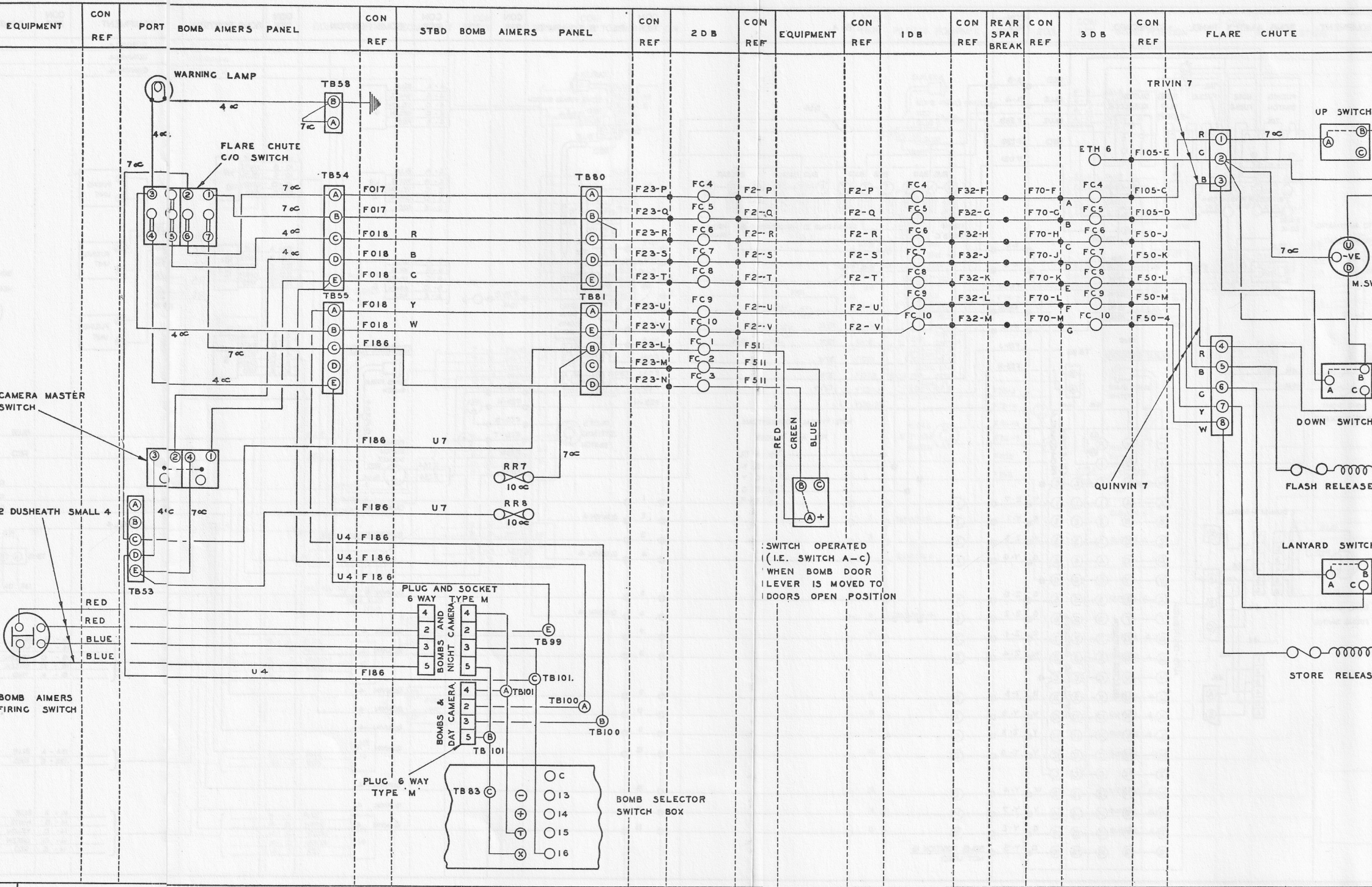

ROUTING CHART GENERAL SERVICES

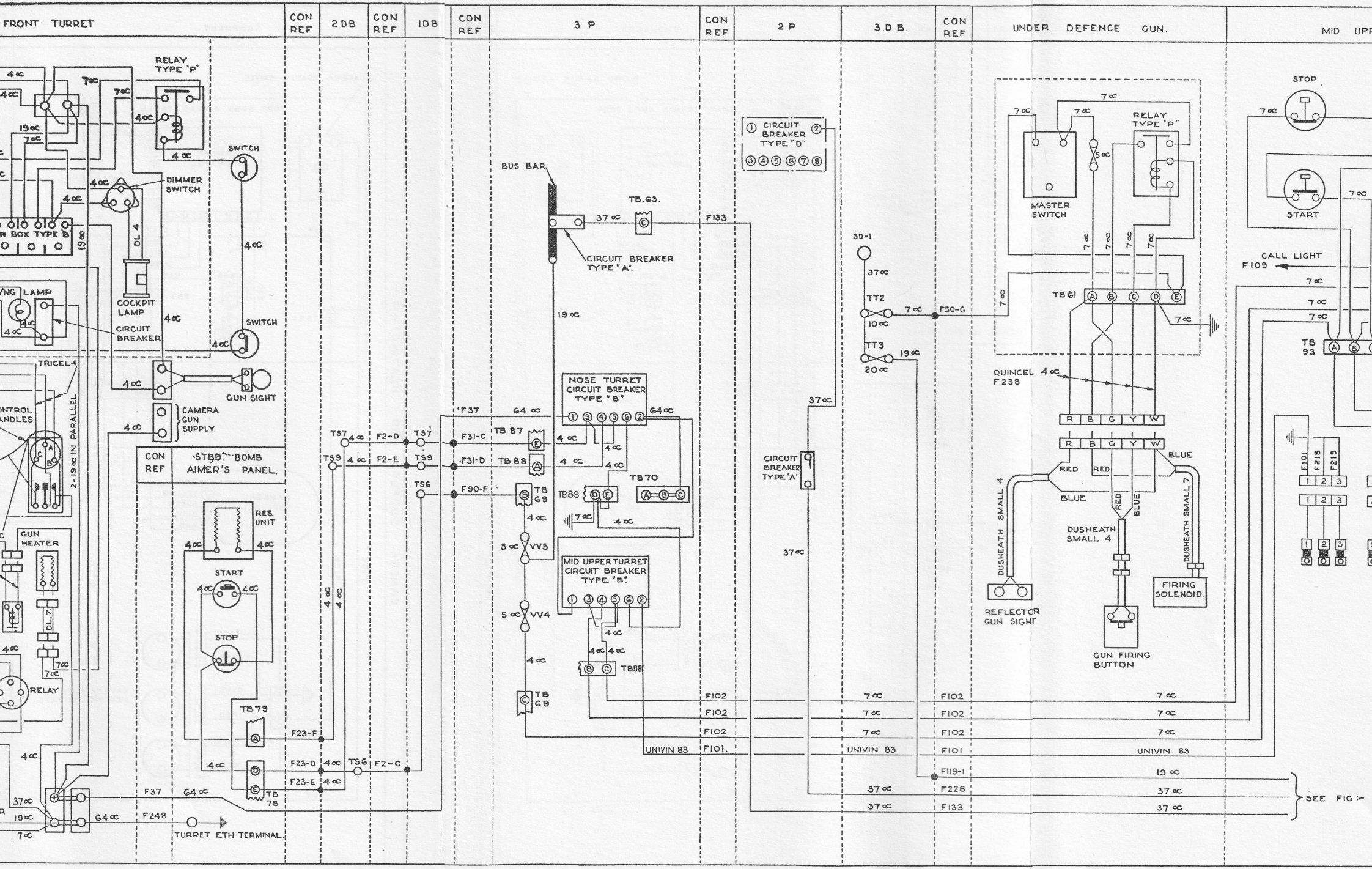

ROUTING CHART GENERAL SERVICES.

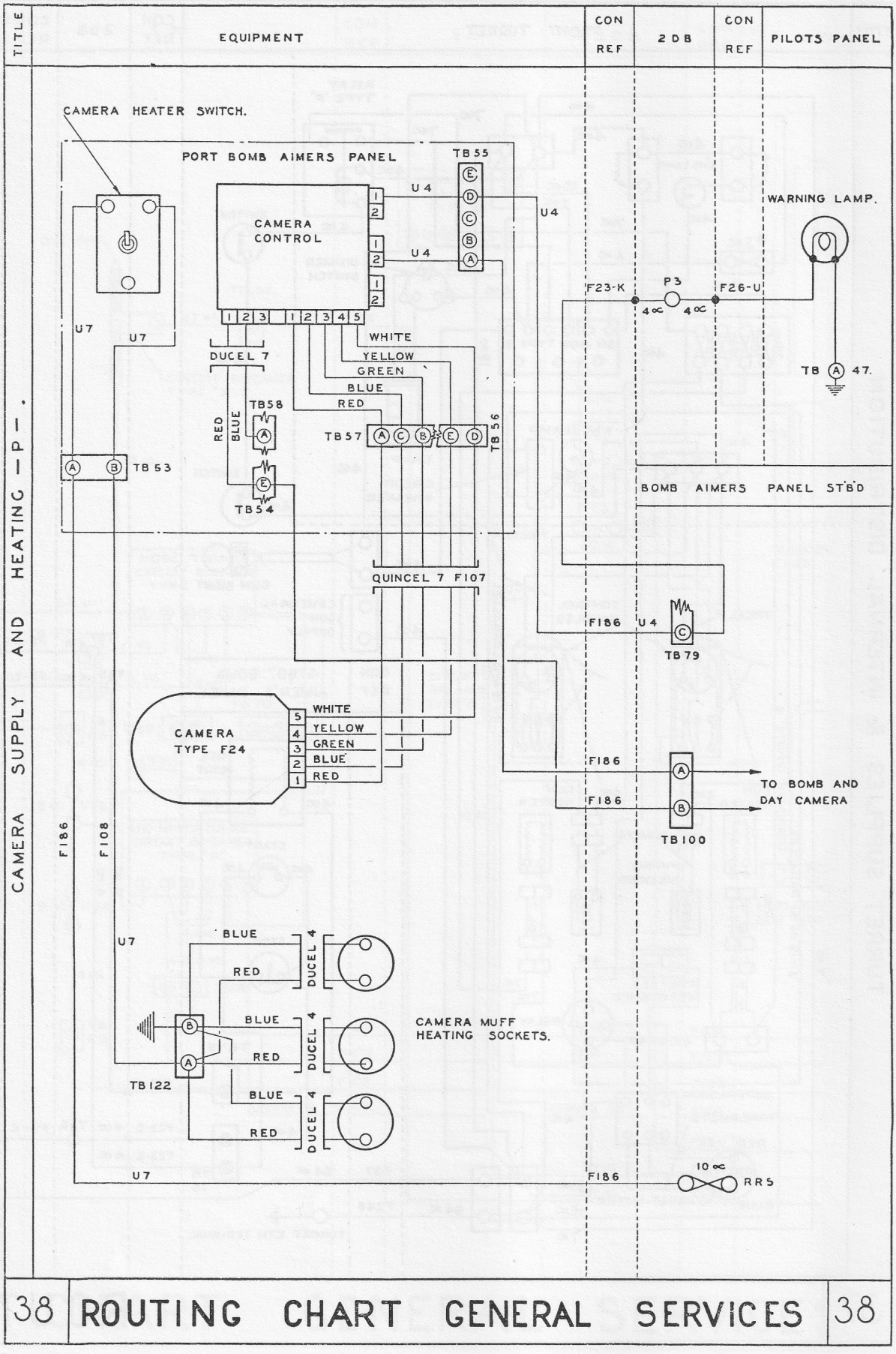
TITLE
CAMERA SUPPLY AND HEATING — P —.
EQUIPMENT
CON REF
2 D B
CON REF
PILOTS PANEL
CAMERA HEATER SWITCH.
PORT BOMB AIMERS PANEL
TB 55
U 4
CAMERA CONTROL
U 4
U 4
WARNING LAMP.
F23-K
P3
F26-U
4∝
4∝
U7
U7
WHITE
YELLOW
GREEN
BLUE
RED
DUCEL 7
TB58
TB57
TB 56
RED
BLUE
TB 53
TB 54
TB 47.
BOMB AIMERS PANEL STB'D
QUINCEL 7 F107
F186
U 4
TB 79
CAMERA TYPE F24
5 WHITE
4 YELLOW
3 GREEN
2 BLUE
1 RED
F186
F186
TO BOMB AND DAY CAMERA
TB 100
F186
F108
U7
BLUE
RED
DUCEL 4
BLUE
RED
DUCEL 4
TB122
BLUE
RED
DUCEL 4
CAMERA MUFF HEATING SOCKETS.
U7
F186
10∝
RR5

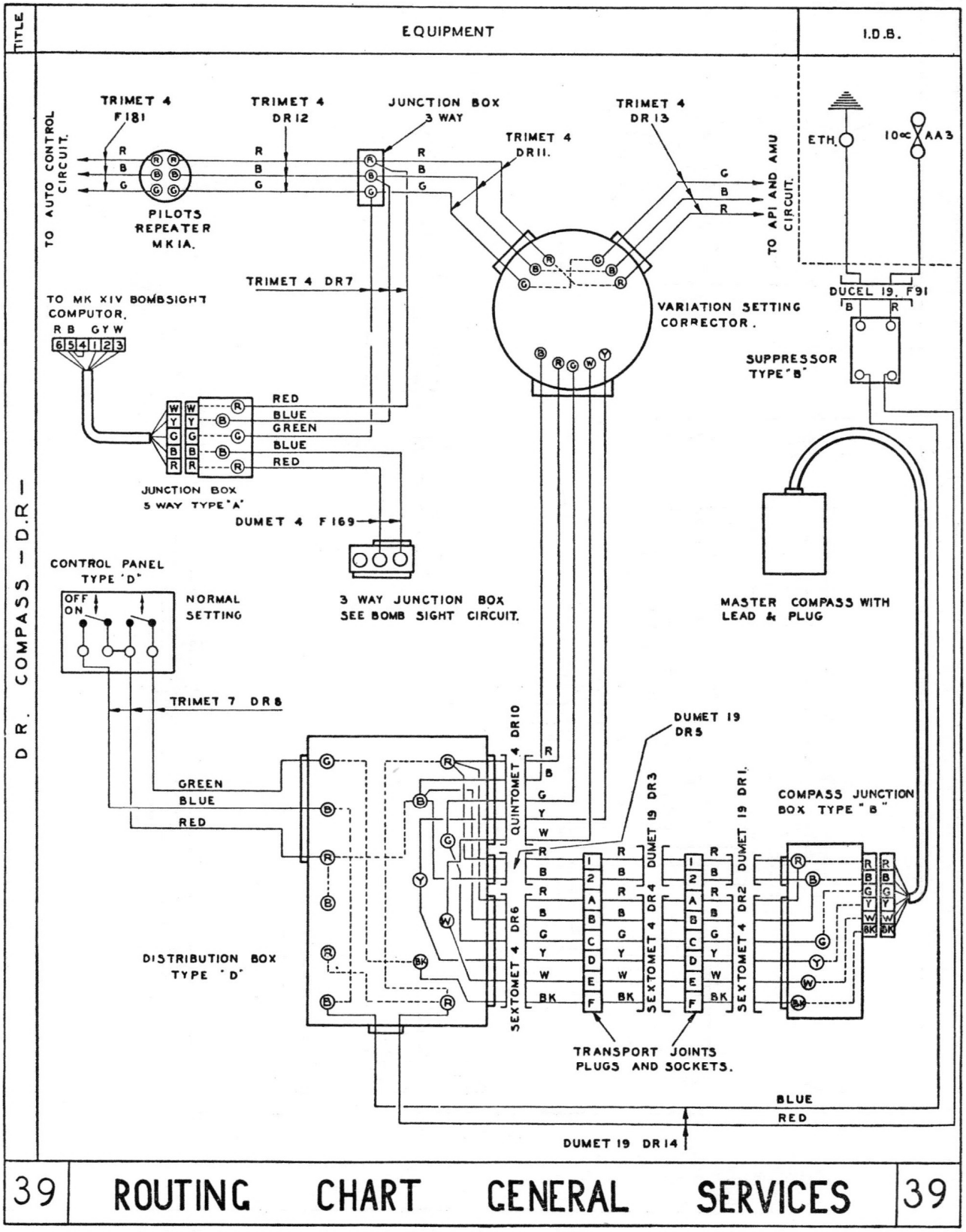
TITLE
EQUIPMENT
I.D.B.
D.R. COMPASS — D.R. —
TRIMET 4 F181
TRIMET 4 DR12
JUNCTION BOX 3 WAY
TRIMET 4 DR11.
TRIMET 4 DR13
TO AUTO CONTROL CIRCUIT.
PILOTS REPEATER MK IA.
TO API AND AMU CIRCUIT.
ETH.
10∞ AA3
DUCEL 19, F91
TRIMET 4 DR7
TO MK XIV BOMBSIGHT COMPUTOR.
R B G Y W
6 5 4 1 2 3
VARIATION SETTING CORRECTOR.
SUPPRESSOR TYPE "B"
RED
BLUE
GREEN
BLUE
RED
JUNCTION BOX 5 WAY TYPE "A"
DUMET 4 F169
CONTROL PANEL TYPE "D"
OFF
ON
NORMAL SETTING
3 WAY JUNCTION BOX SEE BOMB SIGHT CIRCUIT.
MASTER COMPASS WITH LEAD & PLUG
TRIMET 7 DR8
DUMET 19 DR5
QUINTOMET 4 DR10
SEXTOMET 4 DR6
SEXTOMET 4 DR4
DUMET 19 DR3
SEXTOMET 4 DR2
DUMET 19 DR1.
COMPASS JUNCTION BOX TYPE "B"
GREEN
BLUE
RED
DISTRIBUTION BOX TYPE "D"
TRANSPORT JOINTS PLUGS AND SOCKETS.
BLUE
RED
DUMET 19 DR14
39
ROUTING CHART GENERAL SERVICES
39

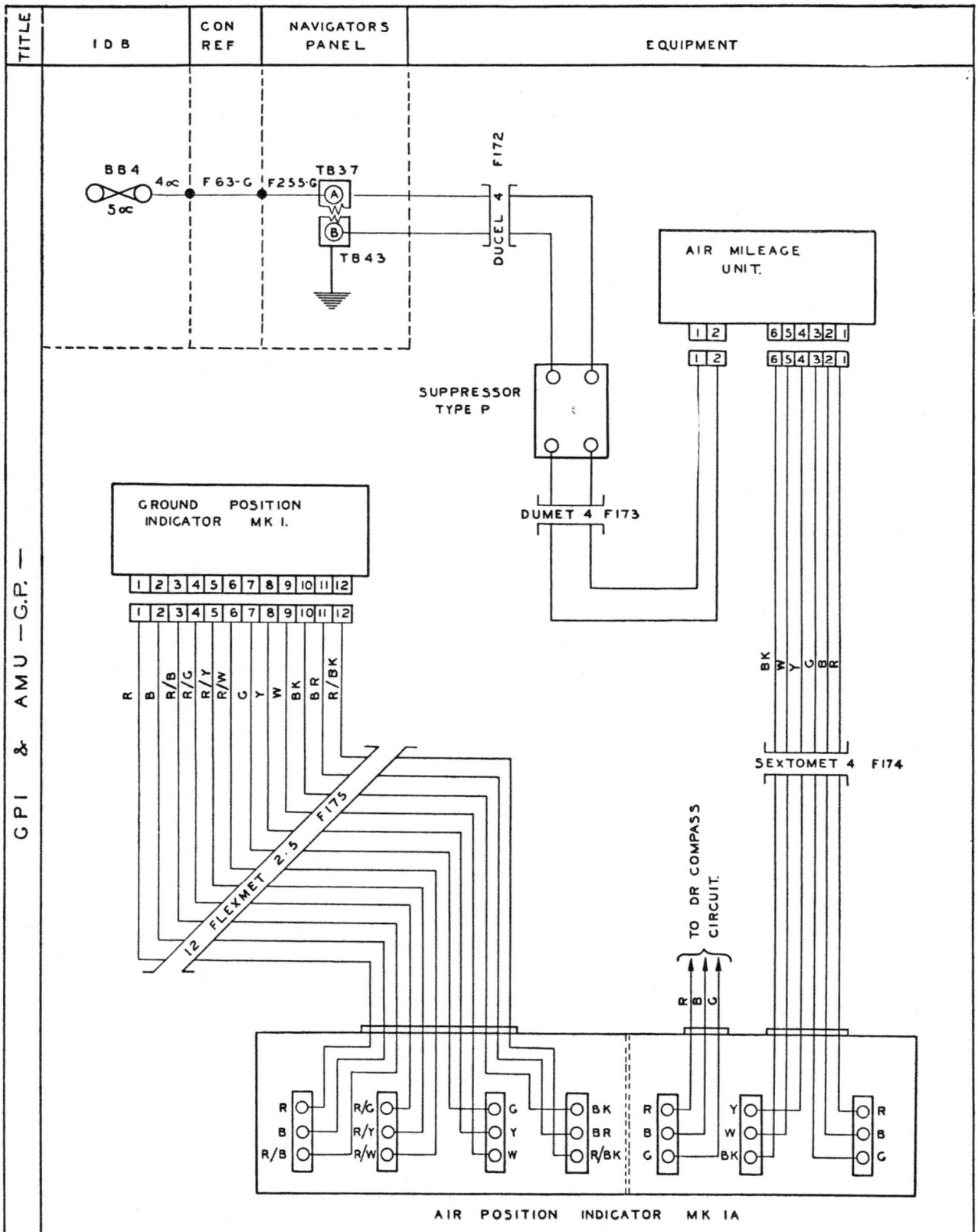

40 ROUTING CHART GENERAL SERVICES 40

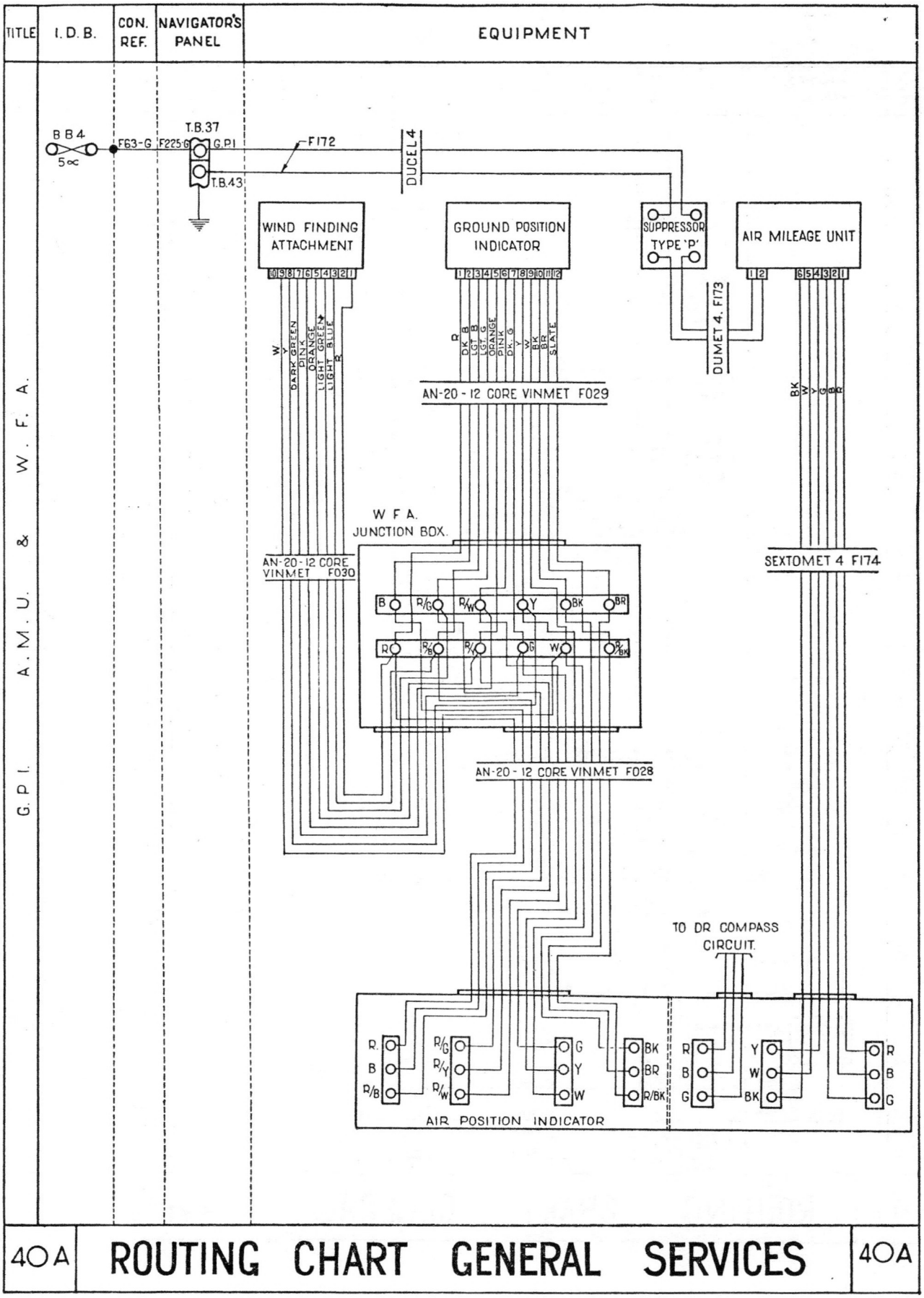
TITLE
I. D. B.
CON. REF.
NAVIGATOR'S PANEL
EQUIPMENT
G. P. I. A. M. U. & W. F. A.
BB4
5∝
F63-G
F225-G
T.B.37
G.P.I
T.B.43
F172
DUCEL 4
WIND FINDING ATTACHMENT
GROUND POSITION INDICATOR
SUPPRESSOR TYPE 'P'
AIR MILEAGE UNIT
DUMET 4. F173
AN-20 - 12 CORE VINMET F029
W F A. JUNCTION BOX.
AN-20 - 12 CORE VINMET F030
SEXTOMET 4 F174
AN-20 - 12 CORE VINMET F028
TO DR COMPASS CIRCUIT
AIR POSITION INDICATOR
40A
ROUTING CHART GENERAL SERVICES
40A

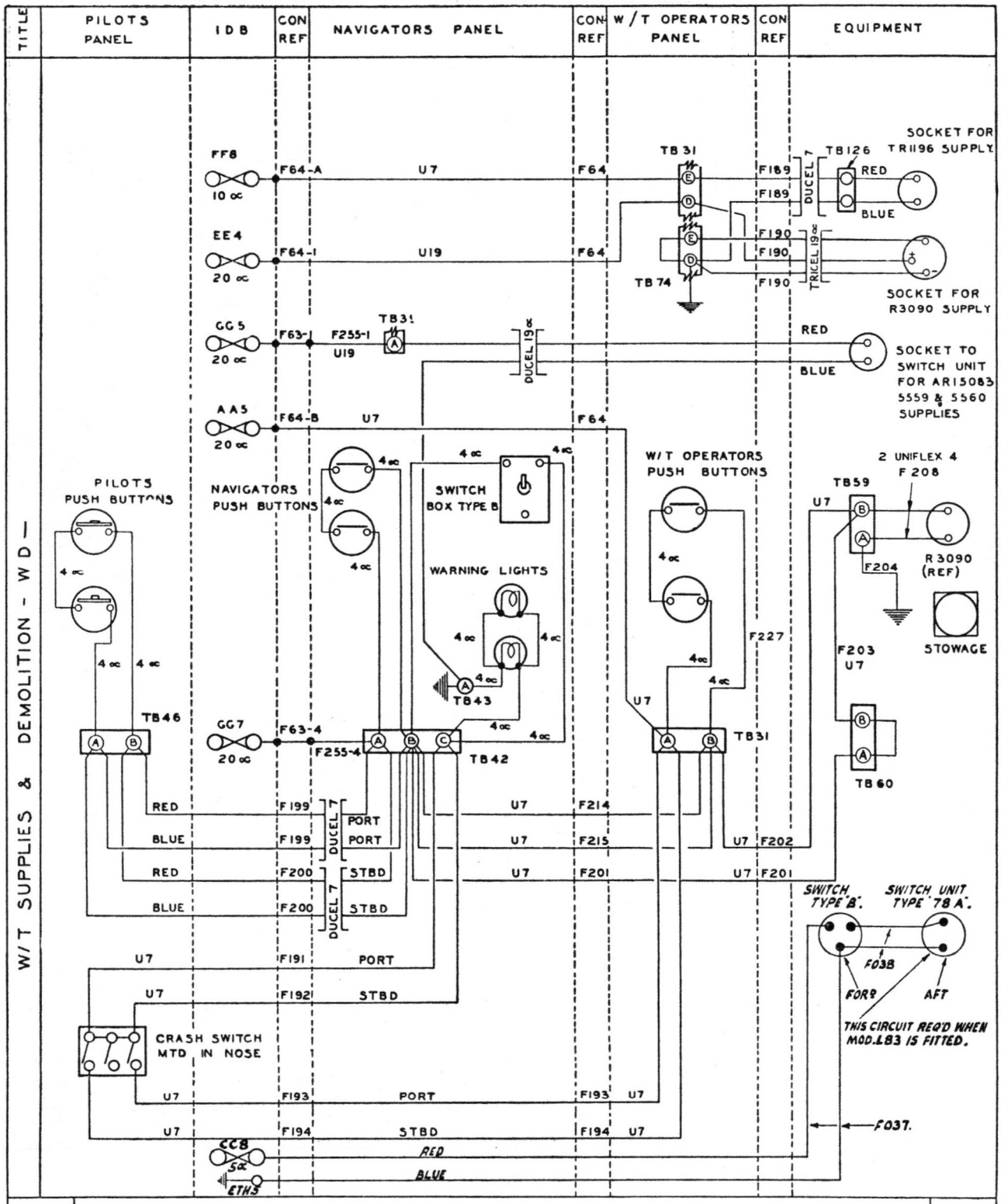

41 ROUTING CHART GENERAL SERVICES. 41

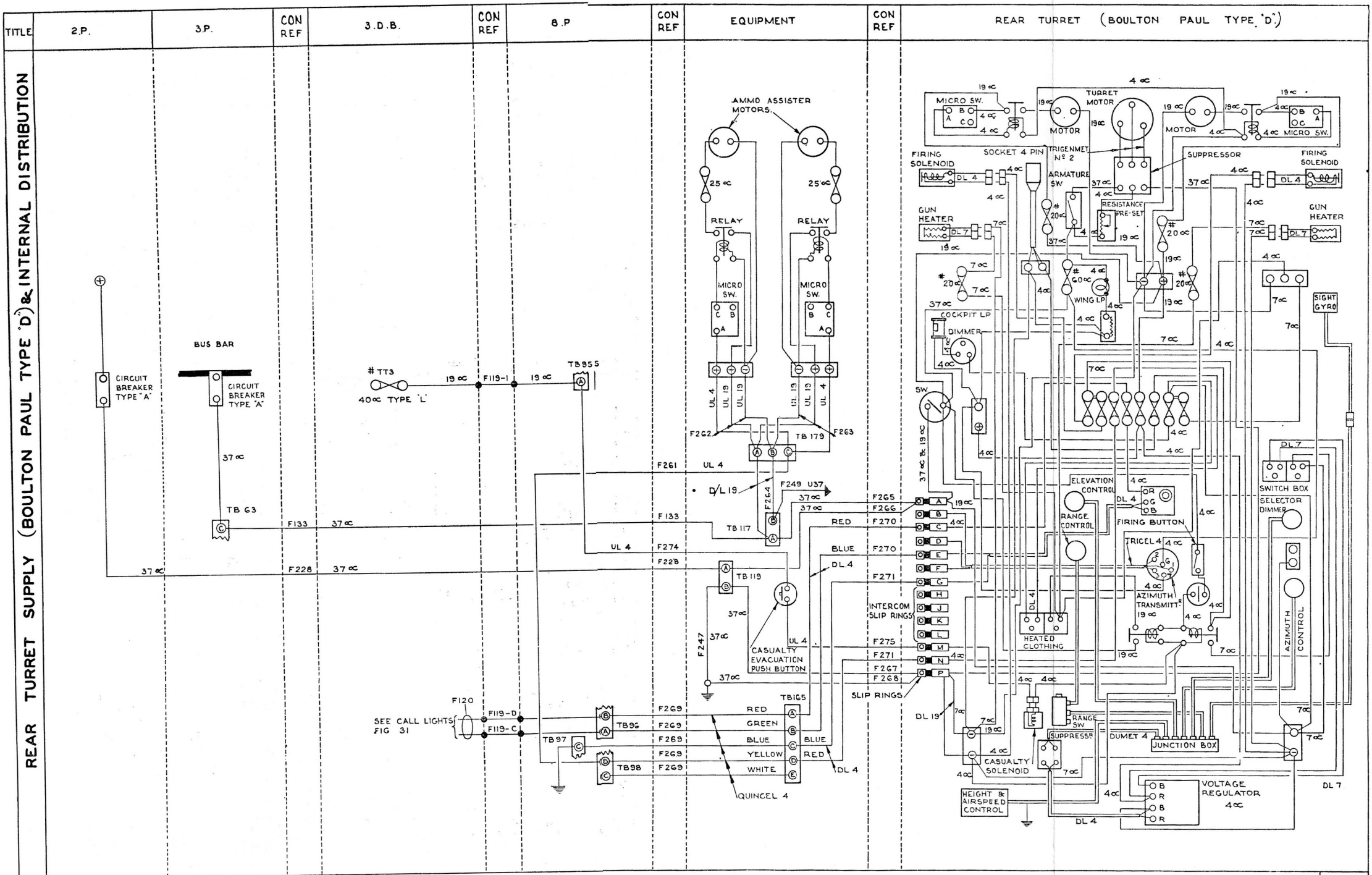

ROUTING CHART GENERAL SERVICES

42 42

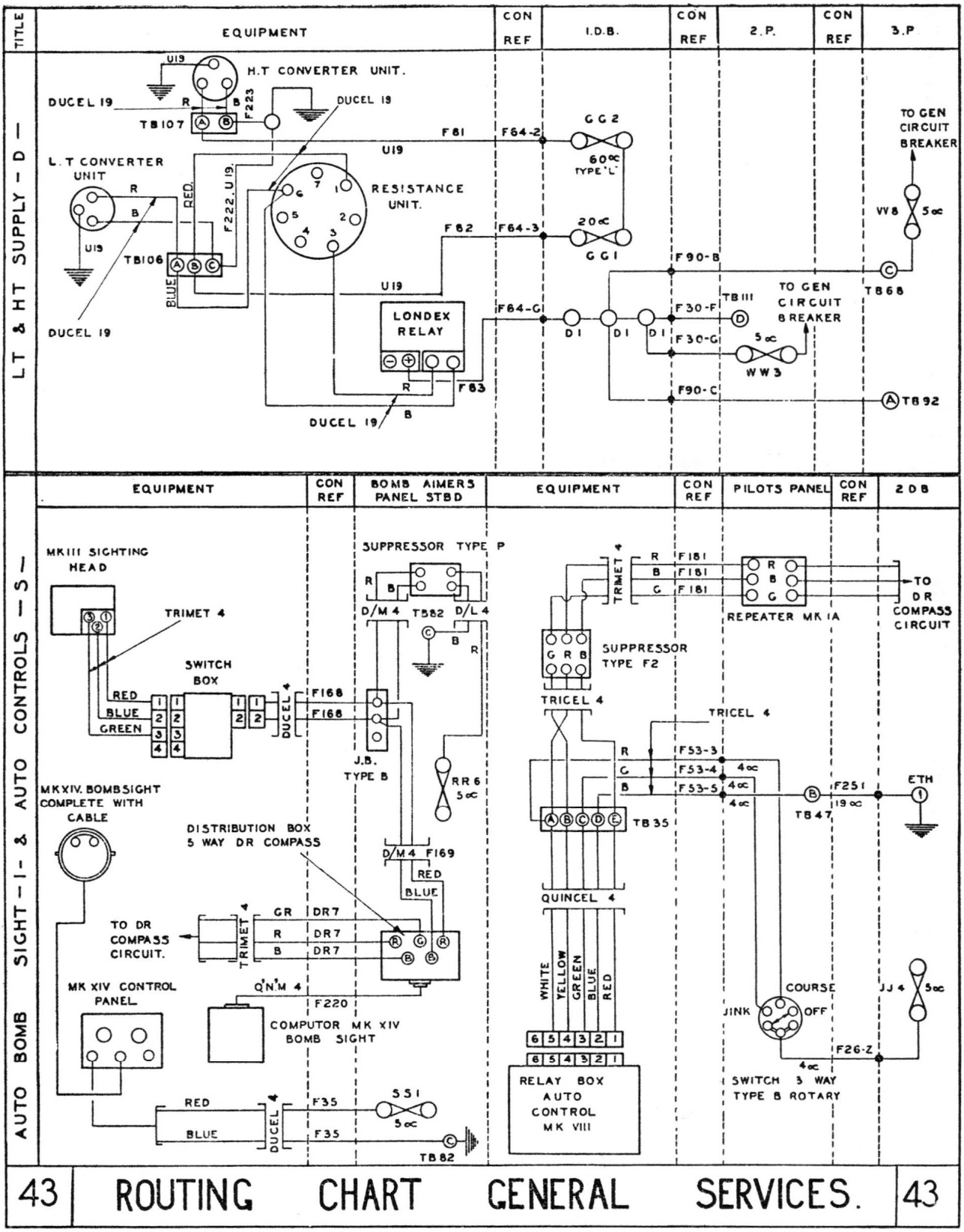
TITLE
LT & HT SUPPLY — D —
EQUIPMENT
CON REF
I.D.B.
CON REF
2.P.
CON REF
3.P
H.T CONVERTER UNIT.
U19
DUCEL 19
R
B
F223
TB107
A
B
DUCEL 19
F61
F64-2
GG2
60cc TYPE 'L'
U19
L.T CONVERTER UNIT
R
B
U19
DUCEL 19
RED
F22. U19.
RESISTANCE UNIT.
7
1
6
5
2
4
3
TB106
A
B
C
BLUE
F62
F64-3
20cc
GG1
U19
LONDEX RELAY
R
B
F63
DUCEL 19
F64-G
D1
D1
D1
F90-B
F30-F
TB111
F30-G
5cc
WW3
F90-C
TO GEN CIRCUIT BREAKER
TO GEN CIRCUIT BREAKER
WW8
5cc
C
TB68
A
TB92
EQUIPMENT
CON REF
BOMB AIMERS PANEL STBD
EQUIPMENT
CON REF
PILOTS PANEL
CON REF
2 D B
AUTO BOMB SIGHT — I — & AUTO CONTROLS — S —
MKIII SIGHTING HEAD
TRIMET 4
SWITCH BOX
RED
BLUE
GREEN
DUCEL 4
F168
F168
SUPPRESSOR TYPE P
R
B
D/M 4
TB82
D/L 4
B
R
J.B. TYPE B
RR6
5cc
D/M 4
F169
RED
BLUE
MKXIV. BOMBSIGHT COMPLETE WITH CABLE
DISTRIBUTION BOX 5 WAY DR COMPASS
TO DR COMPASS CIRCUIT.
TRIMET 4
GR
DR7
R
DR7
B
DR7
MK XIV CONTROL PANEL
Q'N'M 4
F220
COMPUTOR MK XIV BOMB SIGHT
RED
BLUE
DUCEL 4
F35
F35
SS1
5cc
TB82
TRIMET 4
R
B
G
F181
F181
F181
REPEATER MK IA
TO DR COMPASS CIRCUIT
SUPPRESSOR TYPE F2
G R B
TRICEL 4
TRICEL 4
R
G
B
F53-3
F53-4
F53-5
4cc
4cc
4cc
TB35
B
TB47
F251
19cc
ETH
1
QUINCEL 4
WHITE
YELLOW
GREEN
BLUE
RED
6 5 4 3 2 1
6 5 4 3 2 1
RELAY BOX AUTO CONTROL MK VIII
COURSE
JINK
OFF
SWITCH 3 WAY TYPE B ROTARY
F26-Z
4cc
JJ4
5cc
43
ROUTING CHART GENERAL SERVICES.
43

AUSTRALIAN AIRCRAFT RESTORATION GROUP
BOX 1765Q, G.P.O. ELIZABETH ST., MELB. 3001

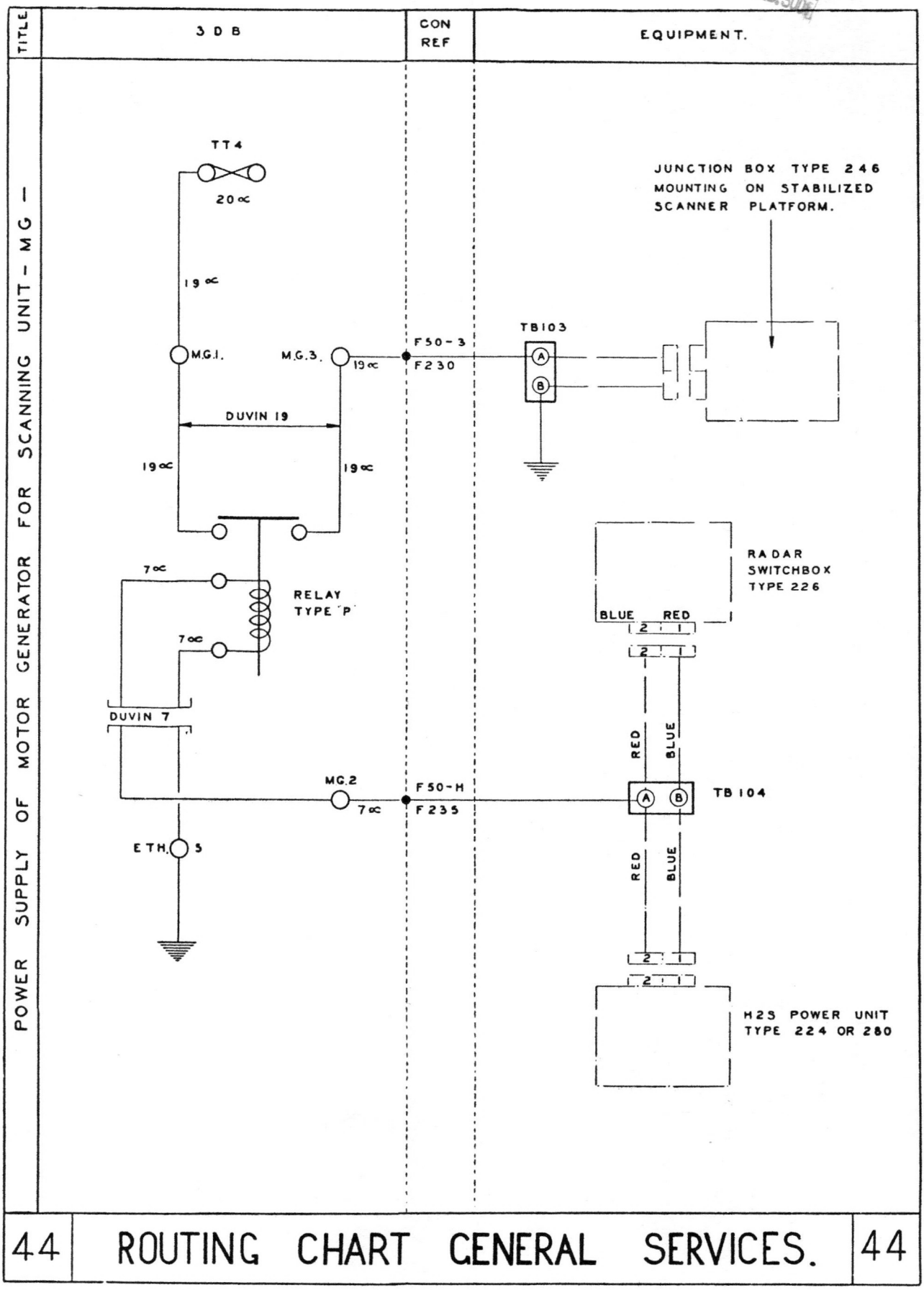

44 ROUTING CHART GENERAL SERVICES. 44

SECTION 6 — CHAPTER 2

Radio Servicing

(To be issued at a later date.)

Section 7

Deacription of Structure

CHAPTER 1 FUSELAGE.
CHAPTER 2 MAIN PLANE
CHAPTER 3 TAIL UNIT
CHAPTER 4 FLYING CONTROLS.
CHAPTER 5. ALIGHTING GEAR.



"THE STRUCTURE OF THE LINCOLN AIRCRAFT ETC. ETC. .....
NOTE THE GRACEFUL LINES OF THE FUSELAGE .....

SECTION 7 — CHAPTER 1

Fuselage

CONTENTS

	Para.		Para.
GENERAL	1	BOMB DOORS	18
CONSTRUCTION	2	CANOPY	19
NOSE SECTION	4	SEATS —	
FRONT CENTRE SECTION...	5	First pilot's seat	20
		Second pilot's seat...	21
INTERMEDIATE CENTRE SECTION ...	9	Air bomber's seat	22
		Navigator's seat	23
REAR CENTRE SECTION	12	Wireless operator's seat	24
REAR SECTION	16	NAVIGATOR'S TABLE	25

ILLUSTRATIONS

	Fig.
Fuselage sections (1)	1
* Fuselage sections (2)	2
Fuselage sections (3)	3
Canopy	4
* Turret mountings	5
Floors	6
* Floor details	7
Bomb doors...	8
Tail wheel mounting in fuselage ...	9
Pilot's seats and attachments	10

* To be issued later.

Fuselage

General

1. The five sections into which the fuselage is divided are: nose, front centre, intermediate centre, rear centre, and rear sections, but for transport purposes the nose and front centre sections are treated as one unit. The nose section embodies the nose turret and the air bomber's stations. The pilot's, second pilot's, navigator's, fighting control and wireless operator's stations are in the front centre section. The intermediate centre section houses sundry items of equipment. The rear section carries the tail unit and tail turret. For identification of formers, and ribs, reference should be made to the relevant illustration in Sect. 4, Chap. 3, Fig. 5.

Construction

2. The fuselage is of light-alloy semi-monocoque construction, built up with transverse channel-section formers, stiffened by fore-and-aft angle stringers. The framework is covered with light-alloy sheet riveted to the formers and stringers with mushroom head rivets. The stringers are secured to the formers by small attachment brackets, the formers being cut away to allow the stringers to pass through (see Figs. 1, 2 and 3). Between formers E and 22E, the fuselage section above the main floor level is constant; from former 22D aft, the fuselage tapers slightly in elevation, and in plan also from former 22E.

3. From the nose aft, the formers are lettered and numbered as follows:—K to A (excluding 1) 1 to 22, 22A to 22E, 23 to 41 inclusive. Former 1 is the first complete former in the front centre section. The sections of formers 1, 6, 9, 12 and 18 in the bomb compartment are of pressed steel.

Nose Section

4. Formers E, F, G and H in the nose section of the fuselage are complete, but forward of former H the formers are cut away at the top to receive the gun turret mounting ring (see Fig. 5). Brackets mounted on these formers carry the ring, which is also supported by a channel member running across the fuselage. Secured to this member and to former H is a draught screen having an access door. A fairing, built up in a similar manner to the surrounding fuselage, covers the space between the front turret and the draught-screen. Under the turret is the air bomber's position. The air bomber's window has a tubular framework, and comprises four toughened glass panels and eleven perspex panels. In the floor of the nose section, and partially covered by the air bomber's sliding seat (see para. 22), is the crew entrance and parachute exit door, which is a pressed light-alloy framework covered top and bottom with light-alloy sheets. The housing for the door is formed of channel-section intercostals between formers G and J. On the port side of the floor at the rear of the nose portion is a circular window for vertical photography (see Figs. 6 and 7).

Front Centre Section

5. The front centre section comprises that portion of the fuselage between the main plane front spar and former E. An extruded member runs the full length of the section on each side and carries the transverse channel-section floor members, which, with the channel-section intercostals, form the framework of the floor (see Figs. 6 and 7). The floor covering is light-alloy sheet. Along the top of the cut-away formers, on each side, runs the cockpit rail (see Fig. 1), an inverted U member. The bomb bay walls comprise the skin, stringers, and short formers below the floor, and the bottom edges consist of two extruded channels which support the bomb door hinges.

6. The extreme front and rear formers of the front centre section, E and 6 respectively, are angle members which form the joints with the other sections, and a bulkhead below the floor level at former E divides the bomb compartment from the nose.

7. Three bomb gear housings are fitted between bomb beams B and C, and three between beams 3 and 4, in the main floor. Each

of these latter beams is supported for the carriage of heavy bombs by a vertical tie-rod, bolted at the lower end to the beam, near the centre line of the fuselage former, which is locally reinforced. Cross channels are fitted between the bomb beams and are braced together by light-alloy intercostals.

8. The pilot's floor is a raised platform on the port side in the front of the cockpit, built of fore-and-aft channel members with intercostals between, and covered with light-alloy sheet on both upper and lower surfaces. On the port side it is attached to the formers and on the starboard side it is supported from the main floor on a braced frame of channel members.

Intermediate Centre Section

9. The intermediate centre section of the fuselage is built on the front and rear spars of the main plane (see Fig. 2). The section is uniform throughout and of similar construction to the front centre section except that the floor is deeper and the construction of the front and rear formers is different. These formers are constructed of two angles riveted to an extension of the spar web to form a channel section.

10. A draught-proof bulkhead at former 8 is hung on a central post which also serves as a tie-rod supporting the main floor in the vicinity of the bomb gear housing. The door and the surrounding panels are made of plywood.

11. Between bomb beams 8 and 9 there are three bomb gear housings, the outer two being of standard type and the centre one designed to carry an R.A.E. heavy bomb slip unit.

Rear Centre Section

12. The rear centre section comprises that portion of the fuselage between the main plane rear spar and former 27. The bomb compartment ends at former 22, and aft of former 22D the fuselage tapers in plan and elevation. The construction aft to former 22 is similar to that of the front centre section (see Fig. 3). The section of former 22 below the main floor is formed into a bulkhead for the end of the bomb compartment.

13. Six bomb gear housings are fitted into the floor, three between bomb beams 13 and 14, and three between beams 18 and 19. The three housings between beams 13 and 14 are strengthened in a manner similar to those between beams 3 and 4 in the front centre section (see para. 7).

14. The mid-upper turret is supported in a mounting ring attached to a deck plate. This plate is stiffened by a hexagonal structure consisting of two longerons and four intercostals. The longerons and the apex of the intercostals are fitted to formers 19 and 22, which are stiffened by arch members and cross members (see Fig. 5).

15. In the floor of this section is a circular hole (see Fig. 6). When this is not used for fitting special equipment it is filled with a wooden hatch. Formers 22C and 22D are cut away at the bottom to accommodate the ring frame (see Fig. 3).

Rear Section

16. The rear section, which is the portion aft of former 27, tapers in plan and elevation in continuation of the rear end of the rear centre section (see Fig. 3). The fuselage ends at former 41, and from this a tubular framework projects to support the tail gun turret mounting ring (see Fig. 5). A detachable fairing fits under this framework and forms the tail of the fuselage below the turret. Where the tail plane enters the section between formers 35 and 38, the skin, formers and stringers are cut away. Below this in the centre of the floor is fitted the tail wheel mounting beam, which is a built-up structure (see Fig. 9). Between formers 29 and 31 on the starboard side, hinged on the leading edge and opening inwards, is a metal entrance door with light-alloy stiffeners and skins, for the mid-upper and tail gunners. A rubber retaining spring is provided to hold the door open. A wooden walkway over the tail plane leads to the rear turret, which is separated from the cabin by a pair of wooden draught-proof doors.

17. Immediately opposite the main cabin door, and on the port side of the aircraft, are two chutes for photo-flash and navigational flares.

Bomb Doors

18. The bomb doors form the lower surface of the fuselage between formers E and 22. They are of light-alloy construction, built up from a central spar, with nose and main ribs tapering in each direction, and with special hinge and edge extruded channels. The spar is made up with T-section extruded flanges connected by a sheet web having flanged lightening holes. The main nose and end ribs are pressings, flanged for the attachment of the inner and outer skins of light-alloy sheet (see Fig. 8). The hydraulic jack attachment at each end consists of a trunnion mounted in ball bearings between the two end ribs. Each door has seven ball bearing or "oilite" bush hinges: one central datum hinge, four intermediate hinges, and two end hinges, all attached to the hinge beam at the lower edge of the bomb compartment wall. Between the hinge bearings a curved sealing strip maintains the seal as the doors move. To seal the joint between the doors when closed, a spruce strip is attached to the projecting flange on the edge channel of the port door, and a brush sealing strip is similarly attached to the starboard door.

Canopy

19. A transparent canopy covers the cut-away portion of the front centre section forward of former 1, and is faired into an astrodome at former 5. The windscreen at the front is supported by a diecast frame, to which is bolted a welded steel tubular structure (see Fig. 4), extending aft to former 1. The remaining portion of the frame is built up of spruce. An inward opening direct-vision window is fitted in each side of the windscreen. In each side, at the forward end of the canopy is a sliding window and in the roof, just behind the pilot's chair, there is an emergency exit (see Sect. 2). Just forward of the dome is a streamlined blister to accommodate the D.F. loop aerial mounted between formers 2 and 3.

SEATS

First Pilot's Seat

20. This is a box-type (see Fig. 10) with a tubular framework. It is mounted in a tubular underframe, and is adjustable for height by a lever at the left-hand side which turns the short levers on the ends of which the seat is mounted. A stud on the hand lever engages with a notched quadrant in the underframe and locks the seat in the required position. The stud can be released by pressing a spring-loaded button on the end of the lever. Armour plate is fitted on the back of the seat, and above the seat behind the pilot's head.

Second Pilot's or Flight Engineer's Seat

21. The second pilot's seat is a folding structure supported on the starboard side of the fuselage (see Fig. 10). The seat itself is built on a plywood base, padded with sponge rubber. The base is stiffened by two inverted U-section members on to which two bearer tubes are welded. A support frame at the outer edge of the seat holds it in a horizontal position and when the seat is folded vertically upwards, this frame slides in a slot in the seat support members. A tubular footrest is fitted in sliding bearings on the underside of the pilot's floor, and when not in use can be slid beneath the pilot's floor.

Air Bomber's Seat

22. The air bomber's seat is similar in design to the first pilot's seat (see para. 20 and Fig. 10). It employs the same underframe, but the seat box is not strengthened by a tubular frame, and there is no armour plate. The seat is mounted in a sliding frame running in guides on the floor, and is locked in position by plungers which enter holes in the guides. The plungers are raised to release the seat by depressing knobs at the forward or aft end of the seat. The seat is pushed forward to clear the parachute exit (see Sect. 2).

Navigator's Seat

23. This is a bench-type seat mounted in the front centre section against the navigator's table. It is supported by three tubular legs with three feet each, and can be tilted, if necessary, to give more space in the gangway behind it.

Wireless Operator's Seat

24. The wireless operator's seat is integral with the cover over the front spar and has a padded seat and back rest (see relevant illustration in Sect. 5). Under the light-alloy panelling it is supported by a tubular framework.

Navigator's Table

25. The table for the navigator and wireless operator is constructed from plywood and spruce members, and is bolted to formers A, 1, 2, 3 and 4 on the port side. At the rear inner edge, it is bolted to the vertical tie rods; at the front end it is supported by a tubular leg, and a support tube for a wireless receiver. Part of the top is hinged to give access to a map compartment for the navigator and at the rear end there is a hinged flap which allows the wireless operator access to a stowage. Attached to the underside of the table are stowages for two R.F. units.

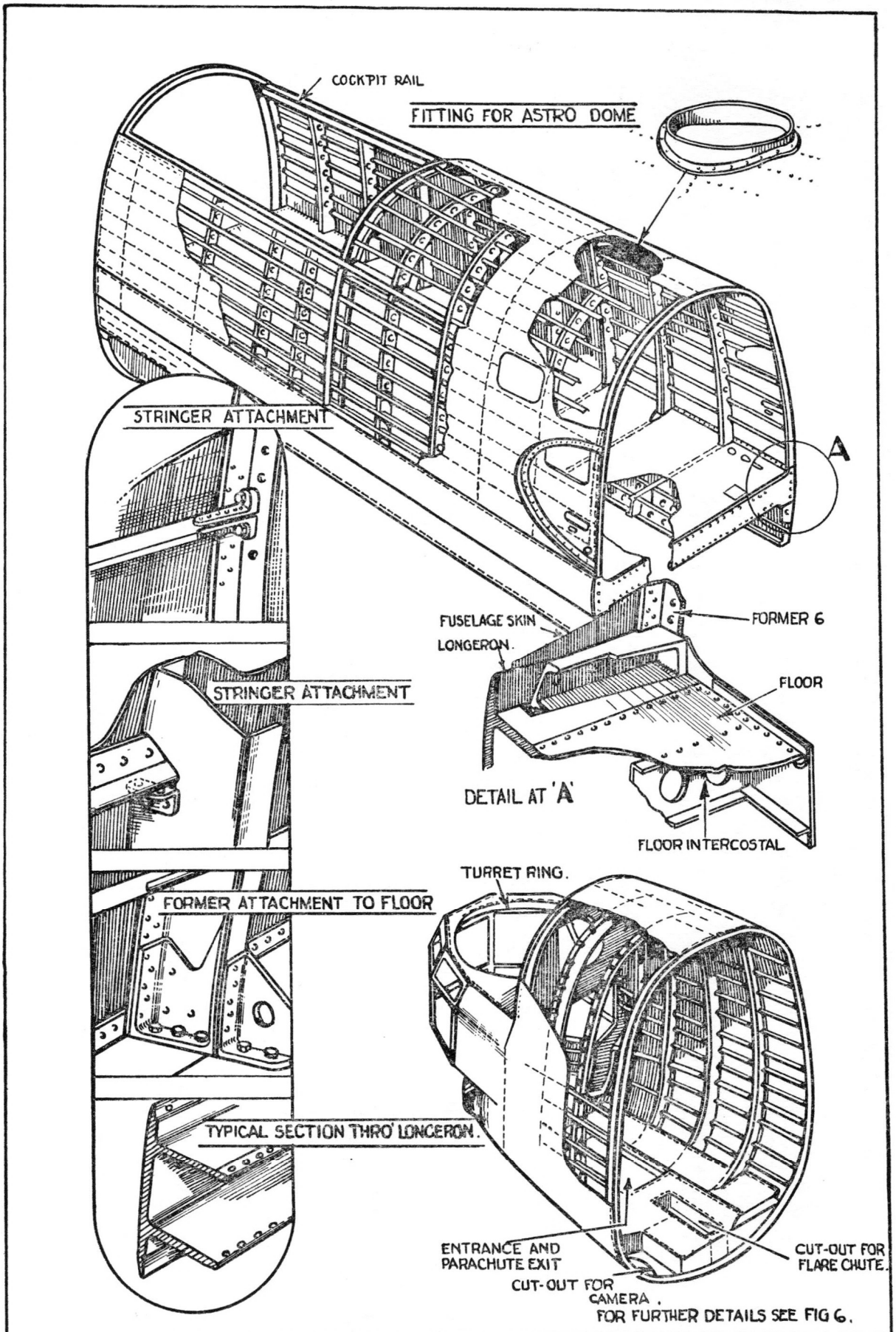

1	FUSELAGE SECTIONS (1)	1

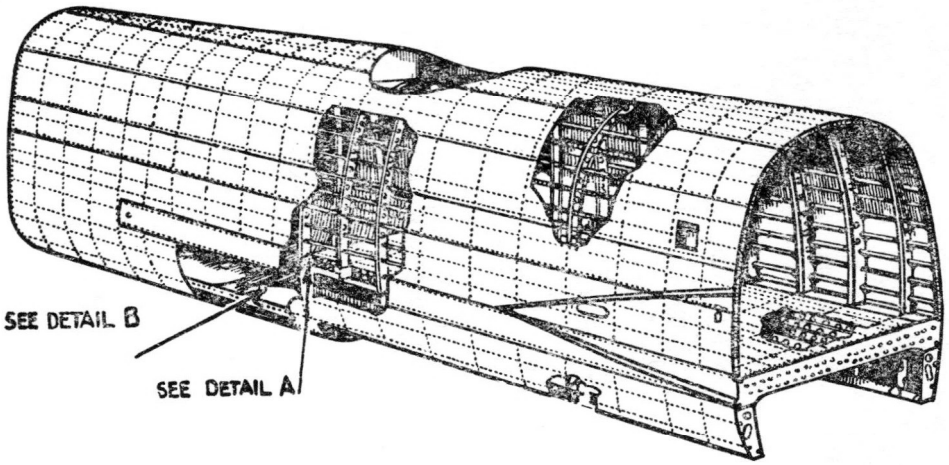

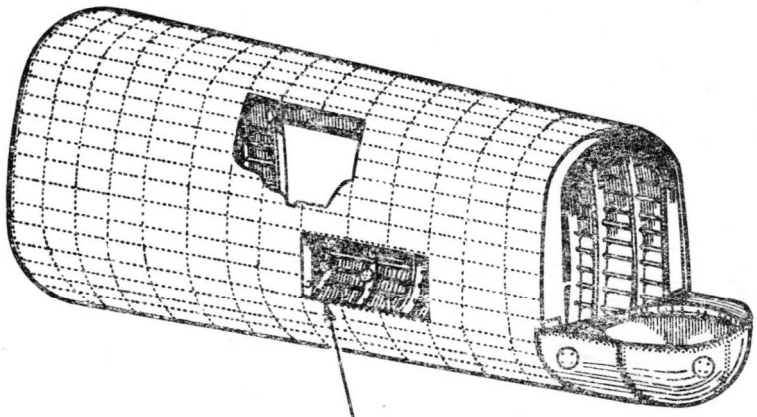

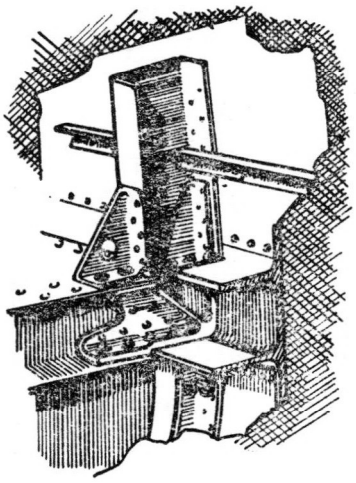

Ⓐ

DETAIL OF FLOOR JOINT
AT FORMER 22

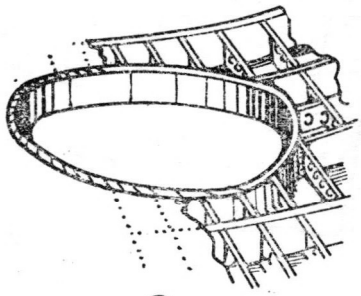

Ⓑ

DETAIL OF RING IN
REAR CENTRE SECTION FLOOR

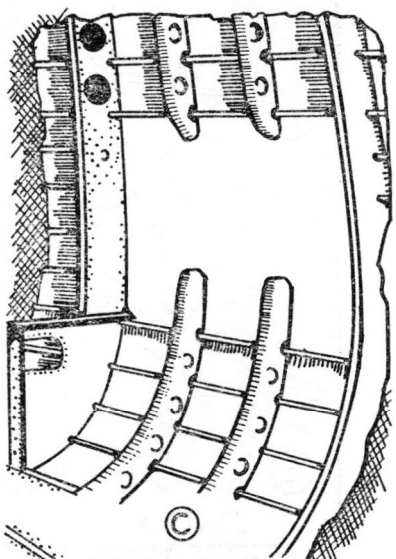

Ⓒ

DETAIL OF STRUCTURE
FORMERS 35 TO 38.

3	FUSELAGE SECTIONS (3)	3

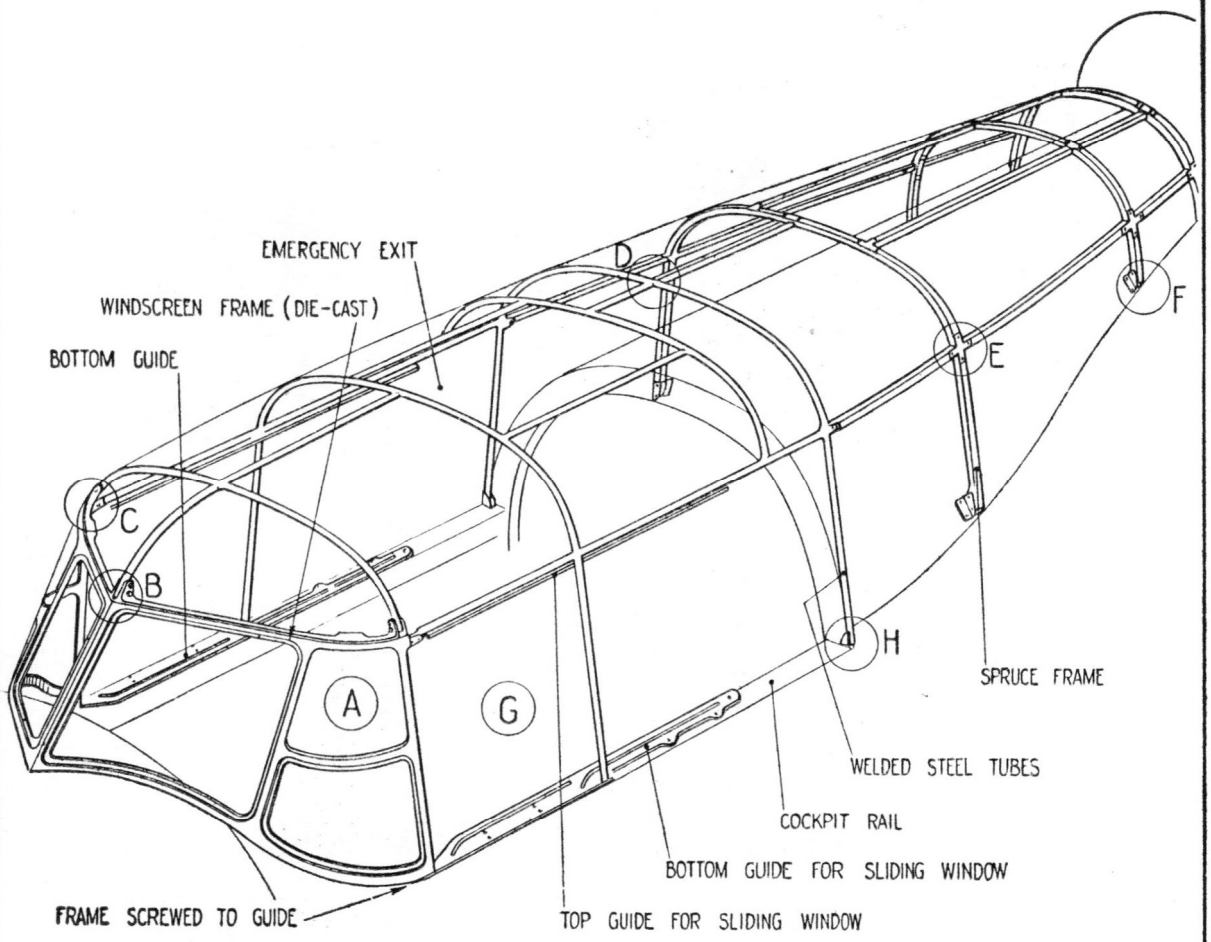
EMERGENCY EXIT
WINDSCREEN FRAME (DIE-CAST)
BOTTOM GUIDE
C
B
A
G
D
E
F
H
SPRUCE FRAME
WELDED STEEL TUBES
COCKPIT RAIL
BOTTOM GUIDE FOR SLIDING WINDOW
FRAME SCREWED TO GUIDE
TOP GUIDE FOR SLIDING WINDOW

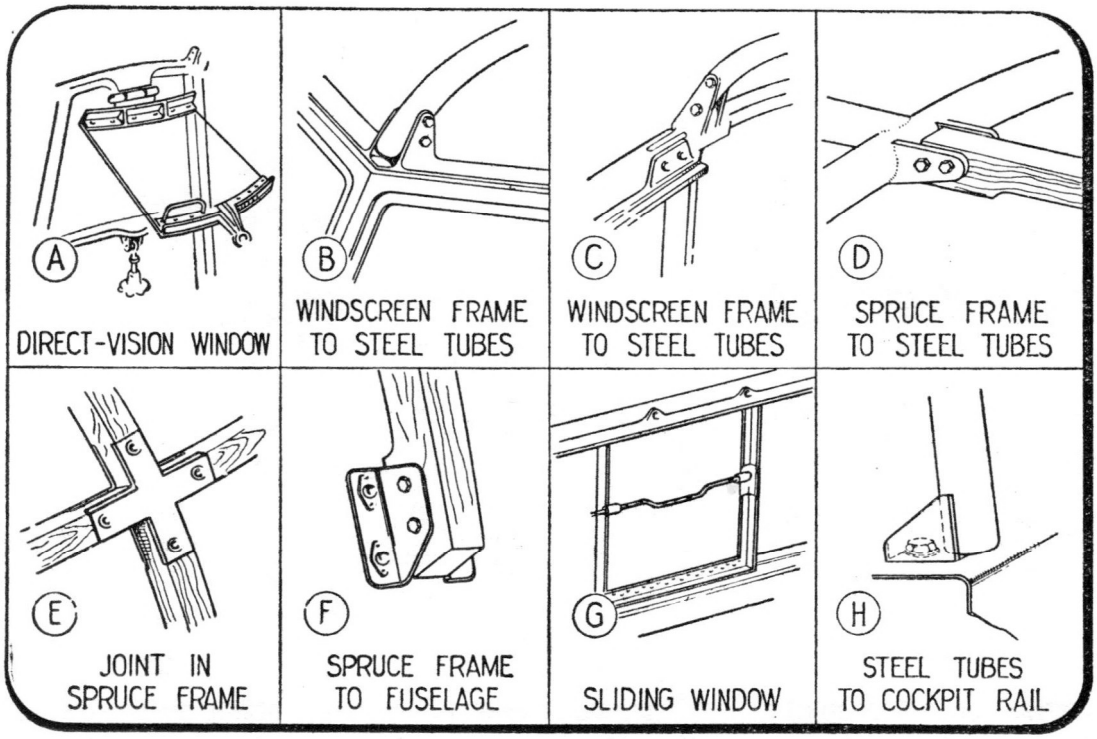
A
DIRECT-VISION WINDOW
B
WINDSCREEN FRAME TO STEEL TUBES
C
WINDSCREEN FRAME TO STEEL TUBES
D
SPRUCE FRAME TO STEEL TUBES
E
JOINT IN SPRUCE FRAME
F
SPRUCE FRAME TO FUSELAGE
G
SLIDING WINDOW
H
STEEL TUBES TO COCKPIT RAIL

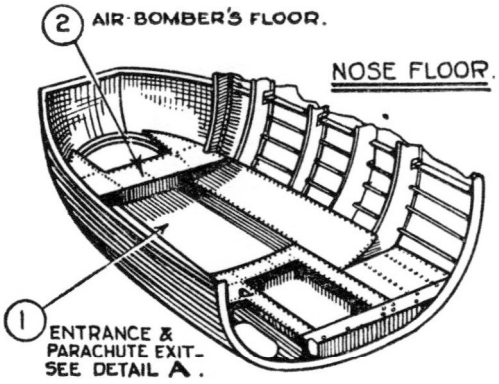

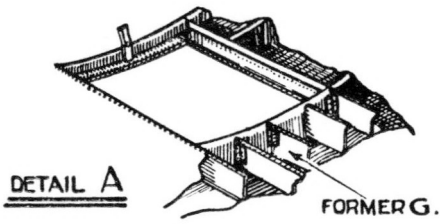

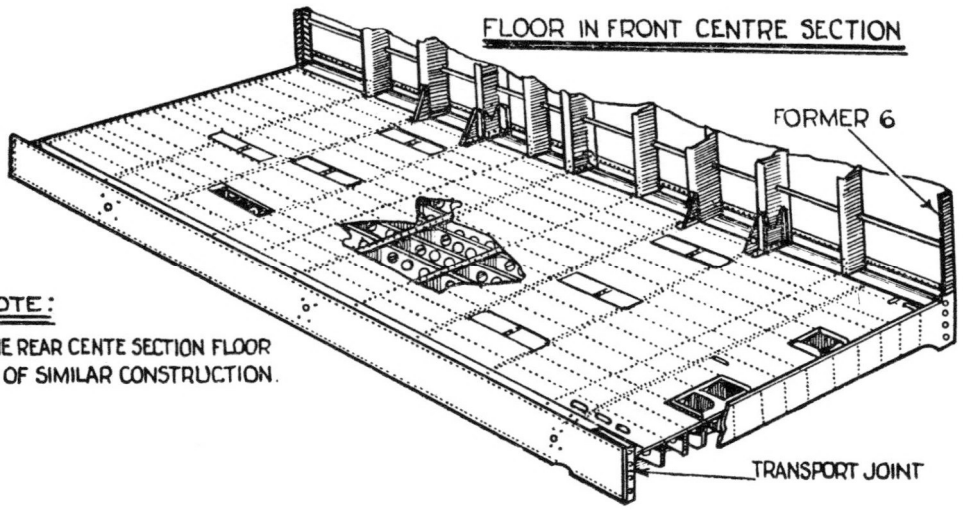

NOTE:
THE REAR CENTE SECTION FLOOR IS OF SIMILAR CONSTRUCTION.

TYPICAL VIEW OF FLOOR BETWEEN FORMER 23 AND FORMER 27.

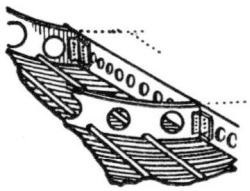

DETAIL B.

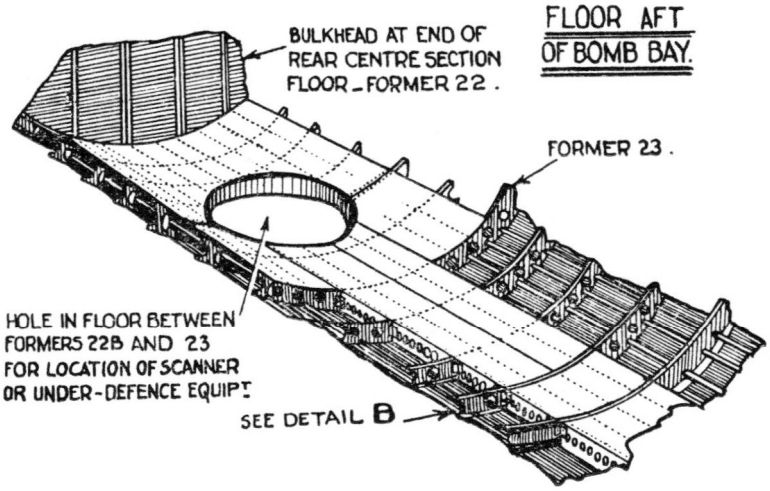

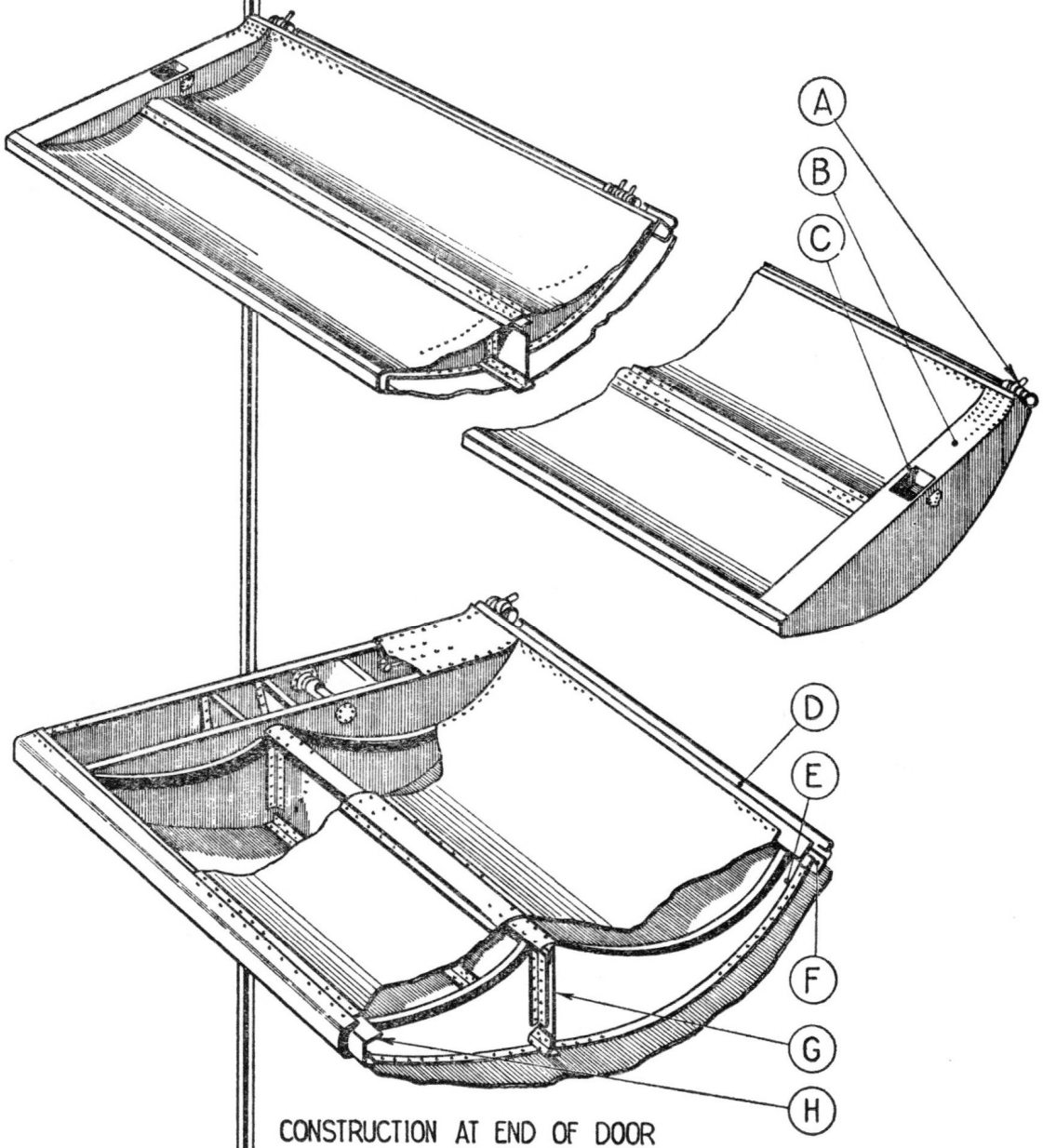

CONSTRUCTION AT END OF DOOR

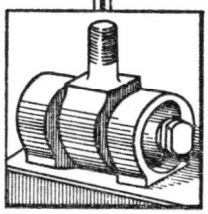

VIEW OF HINGE A

B BOMB DOOR END RIB
C JACK ATTACHMENT
D SEALING STRIP
E INTERMEDIATE RIB
F HINGE CHANNEL
G BOMB DOOR SPAR
H EDGE CHANNEL

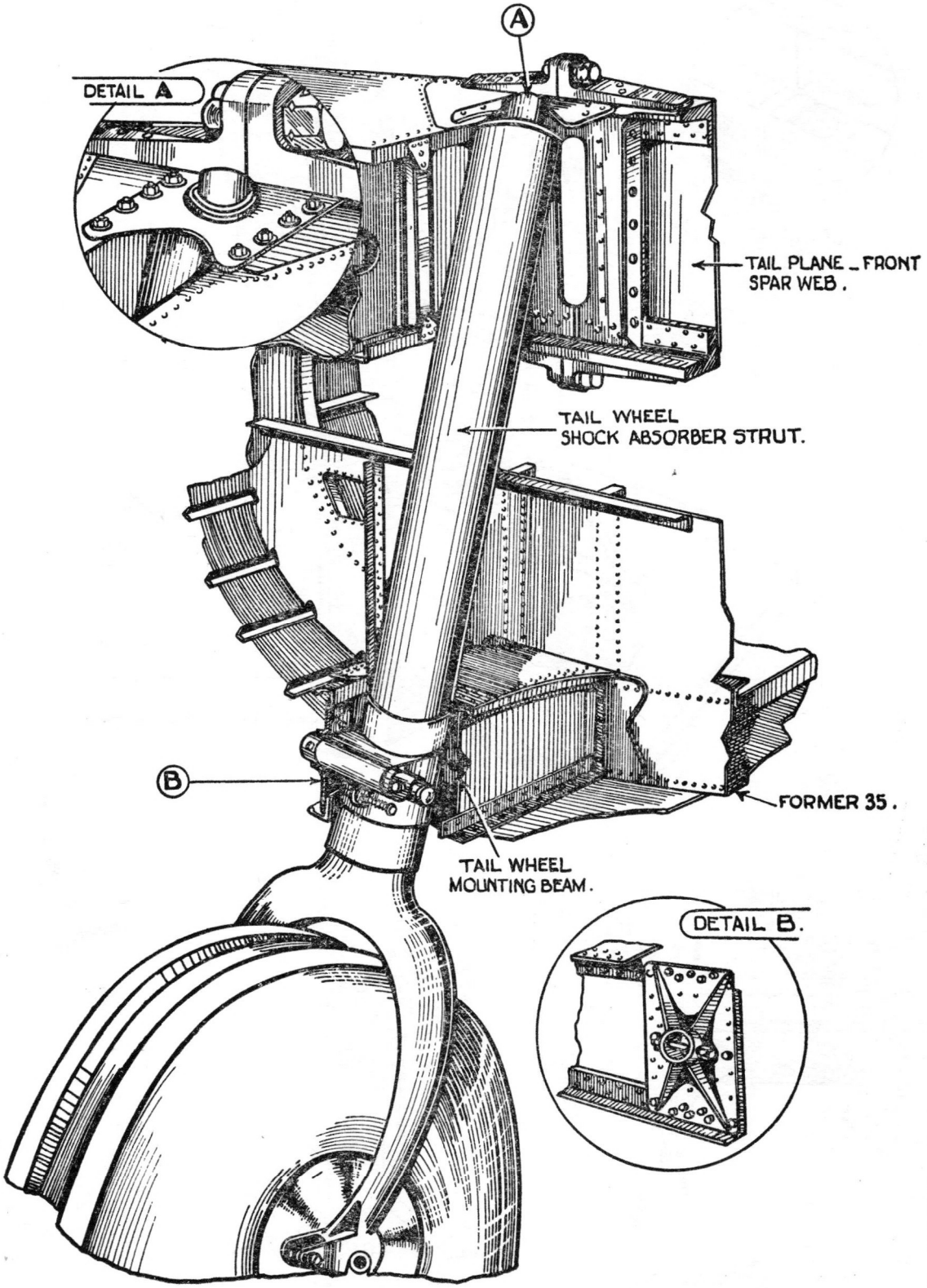

9	TAIL WHEEL MOUNTING BEAM IN FUSELAGE	9

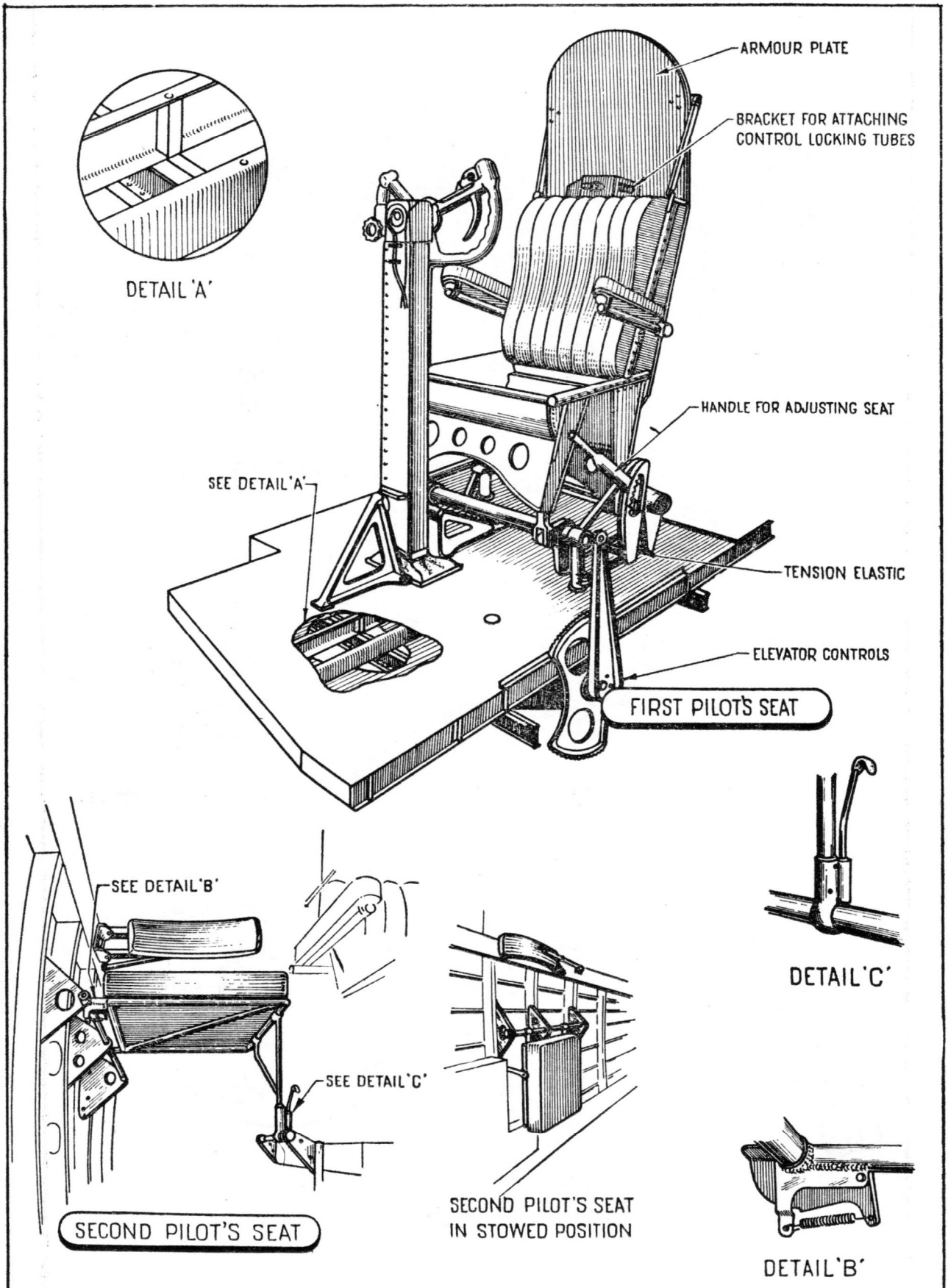
ARMOUR PLATE
BRACKET FOR ATTACHING CONTROL LOCKING TUBES
DETAIL 'A'
HANDLE FOR ADJUSTING SEAT
SEE DETAIL 'A'
TENSION ELASTIC
ELEVATOR CONTROLS
FIRST PILOT'S SEAT
DETAIL 'C'
SEE DETAIL 'B'
SEE DETAIL 'C'
SECOND PILOT'S SEAT
SECOND PILOT'S SEAT IN STOWED POSITION
DETAIL 'B'

SECTION 7—CHAPTER 2

Main Plane

CONTENTS

	Para.
GENERAL	1
Spar booms	4
Spar webs	8
Spar joints	9
Rib numbering	10
Nose portion	11
Centre portion	12
Trailing portion	19
CENTRE PLANE	20
Hinged leading edge	24
INTERMEDIATE PLANE	26
Engine sub-frame attachment	28
Fuel tank compartments	29
Fuel tank access doors	30
Leading edge	31
OUTER PLANE	32
AILERON	33
Trimming tabs	34
Balance tabs	35
FLAPS	36

ILLUSTRATIONS

	Fig.
Centre plane	1
Main plane—intermediate and outer sections	2
No. 1 fuel tank mounting	3
Nos. 2 and 3 fuel tank compartments ...	4
Main plane centre section trailing edge	5
Aileron	6
Flap	7

Main Plane

General

1. The main plane is a cantilever member with a centre section forming a parallelogram and integral with the intermediate centre section of the fuselage, but with outer sections which taper outboard on both leading and trailing edges. Dihedral angle is confined to the outer sections. Wing tips are semi-circular in plan view, and the wing tip trailing edge is detachable. The basis of each section is formed by front and rear spars, separated by ribs which determine the aerofoil contour. The centre plane has transverse stringers. All sections have light-alloy plating attached to the spars and ribs and, in the case of the centre plane, to the stringers as well. (*See* relevant illustration in this Section and Section 5, Fig. 2.)

2. Manufacture, assembly and transport are facilitated by the division of the main plane into sections, structural components are bolted together and flying control members hinged to the related components. These sections consist of:—

(a) Centre plane with trailing edge and hinged leading edge, port and starboard.

(b) Intermediate plane, port and starboard, each with a trailing edge bolted to the rear spar.

(c) Outer plane, port and starboard, with detachable wing tip.

(d) Ailerons, built up of inner and outer sections each side, and hinged to extend across part of the trailing edges of the intermediate and outer planes.

(e) Inner and outer flaps, port and starboard, hinged to the trailing edges of the centre and intermediate main plane sections, and operating conjointly.

(*See* relevant illustrations in this section.)

3. A total of six fuel tanks is carried between the spars of the centre and intermediate planes; one tank in each side of the centre plane and two tanks in each intermediate plane.

SPARS

Spar Booms

4. The spars consist of top and bottom booms to which heavy gauge, light-alloy webs are attached with the booms innermost. The booms are light-alloy extrusions.

5. The four booms for the centre plane are spindled at intervals, but leaving full cross-sectional area at ends and at their points of attachment to fuselage formers 6 and 12. Inside the fuselage the top booms have steel plates attached at one edge, these plates being supplemented by light-alloy bars. The ends of the booms also have steel plates, secured by set screws, to provide reinforcement at the point where the joint pins are fitted and offering a machined face for fitting the intermediate plane attachment shackles. (*See* Sect. 7, Chap. 1, Fig. 2.)

6. Intermediate plane booms are spindled at their inboard ends, forming a channel section; the inner flanges are milled away further outboard, reducing to angle section, but regaining full cross-sectional area at the outboard ends where the joint pins engage, and supplemented by steel plates.

7. The thickness of the spar booms in the outer plane is consistent, but the width decreases progressively towards the outer end; the inboard end is stepped up in width to accommodate the joint pin holes and strengthen that area. The ends of the rear spar booms are contoured to the tip.

Spar Webs

8. The web plates form a total of seven contiguous sections, front and rear, with ends abutting and linked by joint plates. Each centre section spar has one web on either side of the aircraft centre line joined by front and rear plates; the intermediate plane spars each have two web plates connected by riveted joint plates, and one web is used for each outer plane spar. The front spar of the outer plane has a pressed light-alloy tip outboard, conforming to the contour wing tip. Attachment of the web to the centre section top front boom and to both rear booms is by double-ended studs. The trailing edges are bolted to the projecting shanks of these studs.

Spar Joints

9. Each of the four spar assemblies has four joints (Fig. 2). The joint is made by assembling the boom ends with high tensile joint pins through reamed holes in the booms and through steel shackles fore and aft of each boom, completing the assembly by the addition of joint plates bolted to the adjacent webs.

Rib Numbering

10. The numbering of the ribs is not straight-forward, the centre plane numbers being independent of those of the ribs in the intermediate plane and outer plane. For further details, *see* Section 4, Chap. 3, Fig. 5.

Nose Portion

11. The hinged leading edge of the centre plane is dealt with in para. 24. All other nose ribs are similar in design; they are of pressed light-alloy sheet, and each has a large flanged lightening hole in the centre. The outer flanges are cut away in places to receive the T-section stiffeners.

Centre Portion

12. Between the spar there are two types of rib (Figs. 1 and 2). The most common is of pressed light-alloy, having lightening holes with pressed flanges, and stiffening flutes. These ribs are riveted to attachment angles on the spar webs. Except where two of these ribs are assembled together, the flanges to which the skin is riveted are inboard. The ribs at both ends of the intermediate plane and the inboard end of the outer plane are of channel-section, girder construction.

13. Engine ribs are of girder type, built up from deep channel-section members secured at the joints by gusset plates. These ribs are bolted to the spar booms and webs. Other girder type ribs are of channel-section, but of lighter construction. In addition, the inner of the two inboard engine ribs has a web riveted to it (Fig. 1).

14. The centre plane tank ribs are of box formation built up from light-alloy webs separated by diagonal stiffening channels. Reinforcing strips are riveted to the lower flanges which are shaped to receive the nose and top of the tank. The rib webs are cut out for the top-hat section stringers on the top centre plane wing skin.

15. The intermediate plane tank ribs are similar to the ribs described in para. 12, except that they are made in three pieces. The front and rear portions are riveted to angles on the spars, and the gap between them is spanned by shallow channels riveted to the ends. The upper flanges of these ribs are riveted to light-alloy sheets which form the floors of the fuel tank compartment (Fig. 2).

16. The three ribs outboard of the outer well of the outboard tank compartment are of pressed light-alloy sheet with flanged lightening holes, but have rib booms top and bottom which are bolted to angles bolted to the spar booms (Fig. 4). Between the rib booms are vertical top-hat stiffeners, on the outboard side of the rib, and spaced between the lightening holes. The web is riveted to angles on the spar webs.

17. The light intermediate ribs outboard of the outer tank, between the main ribs, are manufactured from light-alloy shallow channels top and bottom, stiffened by vertical flutes and bolted at the ends of the spars, with the flanges inboard. Reinforcement between the flanges is provided by top-hat section stiffeners riveted to the bottom of the channels of the outboard side.

18. Ribs 14 and 1 have deep channel members top and bottom, bolted at the ends to the spars, and with a web of light-alloy sheet stiffened by top-hat members of the same material (Fig. 2).

Trailing Portion

19. The trailing portions of the ribs (i.e., behind the rear spars) are of pressed light-alloy sheet, with lightening holes and stiffening flutes (Fig. 5).

Centre Plane

20. The centre section fuselage is integral with the centre plane, and the front and rear spars have additional web plates bolted to them in the middle to form the fuselage transport joints at formers 6 and 12. The longerons of the fuselage floor are attached to these formers. Shoe brackets connect the spar booms, formers, and skin; and the fuselage shell is built up of formers, stringers and light-alloy skin mounted to the floor structure (*see* Sect. 7, Chap. 1). Angles are secured to the outside of the fuselage skin. The skin

forming the plating over the centre tank bays is also part of the aerofoil surface for the centre section wing and is riveted to those angles. The front spar has additional strengthening plates as described in para. 6.

21. Each inboard engine rib has a light-alloy web on the inboard side forming the outer end of the fuel tank compartment, the fuselage skin forms the inner ends. Each detachable fuel tank is secured by five steel straps to the tank ribs; the hinged ends of these adjustable straps are mounted to brackets on the front and rear spars.

22. In the bottom surface of the centre plane are two large doors for access to the fuel tanks (Fig. 3). The doors are stiffened by light-alloy top-hat stiffeners.

23. Outboard of the fuel tank compartments are the engine nacelles which also house the main landing wheel units when retracted. The forged light-alloy undercarriage beams on which both undercarriages and engine subframes are mounted are bolted on the forward side of the front spar through the spar booms. The spars are here braced together by two engine ribs as described in para. 13. Two intermediate ribs between the engine ribs support the top skin.

Hinged Leading Edge

24. Hinged to the top boom of the front spar by a piano hinge is the leading edge. It consists of "C" shaped pressed light-alloy ribs covered with light-alloy skin and three "T" section stiffeners running from end to end. The forward contour is strengthened by a heavy-gauge light-alloy plate. The leading edge is slotted at the lower edge, to engage studs on the front spar bottom boom, and is supported by a channel section nose rib at the engine nacelle.

25. There is a faired opening in the starboard leading edge for the cabin heater inlet duct, and fairing on the underside covers the by-pass duct.

Intermediate Plane

26. The intermediate sections differ from the centre section in that they have no stringers. The outboard engines and subframes are underslung from the front and rear spars, and in each wing between the spars are two fuel tank compartments, one either side of the engine.

27. The spar web is split just outboard of the outboard engine rib (rib 8), and the two parts are riveted to joint plates. Outboard of the outer tank compartment there are three ribs of pressed light alloy (*see* paragraph 16), and the end rib is of light girder construction (*see* paragraph 13). In between these there are eight light ribs (*see* paragraph 17). Rib 14B has a section cut out of the bottom boom, which is attached to an intercostal between ribs 14A and 15. The top and bottom rib booms at this point are interconnected by a vertical channel.

Engine Subframe Attachment

28. Heavy gauge steel channels bolted to the front spar form the two front pick-up points for the engine subframe, and the rear attachment is to two heavy gauge steel channels on rib 7A. The engine ribs (*i.e.,* ribs 7 and 8) and this intermediate rib are all of girder construction between the spars (*see* paragraph 13). The two engine ribs, in addition, have light alloy webs stiffened by vertical top-hat section, and form the ends of the fuel tank compartment.

Fuel Tank Compartments

29. The ribs at the other ends of the tank compartments, *i.e.,* ribs 1 and 14, are both built up of deep light alloy channels top and bottom, bolted to the spar booms. To these channels are riveted light alloy webs stiffened by top-hat section stiffeners. The tank ribs are alternatively single and double. The double ribs consist of two single ribs back-to-back (*see* paragraph 15). To the top of these ribs is riveted a flooring of light alloy sheet (Fig. 4).

Fuel Tank Access Doors

30. There are two doors, in the top surface of the intermediate plane, which give access to the fuel tank compartments. They are built on a rectangular frame with formers and intercostals, to which are riveted two skins with hand holes and filler access panels.

Leading Edge

31. The nose ribs are of pressed light alloy with large flanged lightening holes, and are attached to angles riveted to the front spar

web. Two "T" section stiffeners strengthen the leading edge, which has heavy gauge light alloy plating at the nose. Alternate ribs inboard of the engine nacelle have light mounting channels for control rods and fairings.

Outer Plane

32. The outer section of the main plane contains no equipment, except a balloon barrage cable cutter and wing-tip navigation lamps. The inboard rib, No. 19, is of light girder construction (*see* paragraph 13) and the rest are of pressed light alloy (*see* paragraph 12). The flanges of the ribs are inboard, except at ribs 22 and 33, which are double ribs. Rib 40 has no lightening holes, being stiffened by flutes. The extreme wing tip is a large "U" section curved to the contour. The trailing section of the tip is detachable, and built up of ribs without flutes and a "U" section trailing edge. In this section is an acetate housing for the identification lamps, and three access panels. The nose ribs are of pressed light alloy with a large flanged lightening hole.

Aileron

35. The aileron is made up of an inner and an outer section joined by a torque shaft bolted to laminated end plates between ribs 12 and 14 (corresponding to ribs 19 and 20 of the main plane) (Fig. 6). This joint is covered, after assembly, by a light alloy fairing, attached by screws and anchor nuts. Both sections are of similar general construction, employing a main spar with top and bottom booms, light alloy ribs, contoured nose plating and nose ribs riveted by attachment angles to the spar, a "V" section trailing edge member, and the whole structure plated with light alloy sheet. The inner section has thirteen ribs and the outer section fifteen; these are numbered from one to twenty-eight consecutively from the inboard end, which is in line with wing rib No. 12. The four ball-bearing hinges are located between aileron ribs 4 and 5 and 11 and 12 on the inner section, and between ribs 16 and 17 and 25 and 26 on the outer section. The hinges connect to L-shaped brackets bolted to the upper surface of the main plane trailing edge. Deflector plates are fitted to the trailing edges of the inboard ends of the inner sections. A trimming tab is inset in the trailing edge, extending between ribs 10 and 13, and a balance tab is hinged to the inboard end of the trailing edge on the outer section between ribs 14 and 22. Leaden mass balance weights along the inside of the nose structure of each section should be within the same limits for total weight, namely, $18\frac{1}{2}$ lbs. $\begin{matrix}+1\\-0\end{matrix}$ lb. Balance discs are fitted over bolts (one $\frac{1}{4}$ in. and one $\frac{3}{8}$ in.) at each side of the forward edge of the gap formed for the operating fork and link tube. Up to twelve discs may be added to each section, for the purpose of establishing static balance, as laid down in Section 4, Chapter 3.

Trimming Tabs

34. Each inner aileron carries a trimming tab at the outboard end, attached to the aileron by a piano type hinge and with operating arm assembly riveted to the under surface. The tab is assembled from a light alloy channel spar, five stiffening ribs and 26 gauge light alloy skin riveted to the structure. Trimming tab adjustment is controlled from a hand wheel on the right-hand side of the pilot; final transmission of movement is by means of screw-jack mounted in the aileron trailing edge.

Balance Tabs

35. At the inboard end of each outer aileron is a balance tab of similar construction to the trimming tabs and attached by a piano type hinge to the aileron. Operation is through the medium of a connecting rod between an eyebolt on one of the hinge brackets and a lever on the balance tab. (For rigging instructions, *see* Section 4, Chapter 3.)

Flaps

36. The split trailing edge type flaps are in three sections, the inboard section running the span of the centre plane trailing edge, with inner and outboard sections located under the inner portion of the intermediate plane. The flap sections are operated by push-pull tubes and connecting rods or links with a universal joint action (Fig. 7). The tube operating the outer sections is connected to the inner tube by two ball-joints with interconnection tube, and the inner tube is connected to the flap jack piston rod by another ball-joint. The

flap spars are of inverted U section, flanged outward at the base and riveted to the skin; the leading edge is of channel section and the trailing edge is made from a light-alloy extrusion; between the latter two members are flanged ribs. The riveted skin covering is reinforced by corrugated sheets, and trailing edges of the ribs strengthened by a light-alloy strip riveted to the rib flange. The connecting links pivot on circlip-retained steel pins in the operating tube, and engage in high tensile steel eyebolts which are free to make partial rotary movement in the spar. The connecting links are spaced as follow: Eight for the centre plane flap and six for the inner section, and three for the outer section of the intermediate plane flap. The flaps hinge on piano type hinges bolted to the flap leading edge channel member and to the false spar of the centre and intermediate plane trailing edges. The rear section of the inboard engine nacelle fairing is attached to the underside of the centre plane flap by bolts through the flanged edges of the nacelle fairing. (*See* Section 4, Chapter 3, for rigging data.)

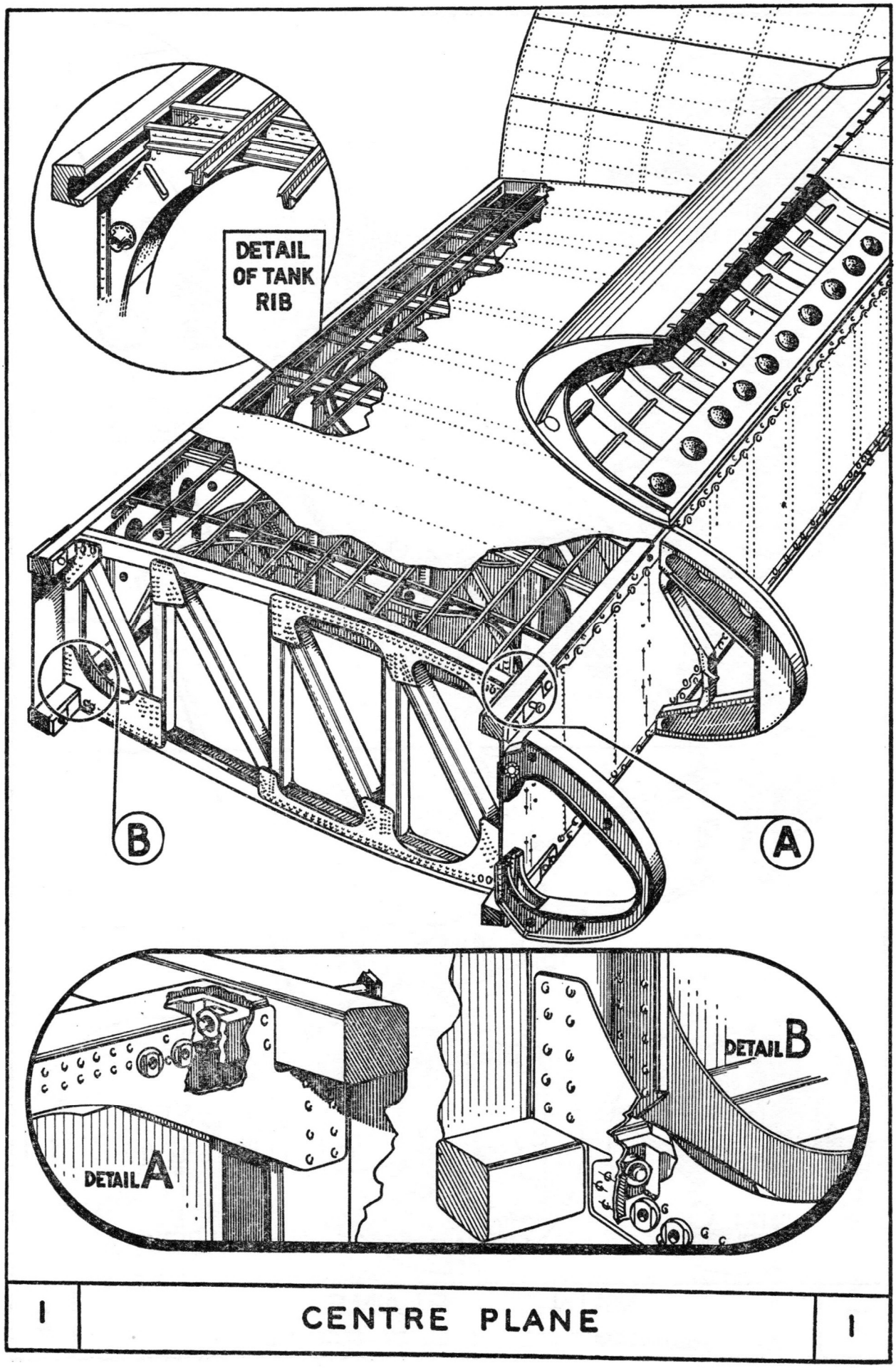

1	CENTRE PLANE	1

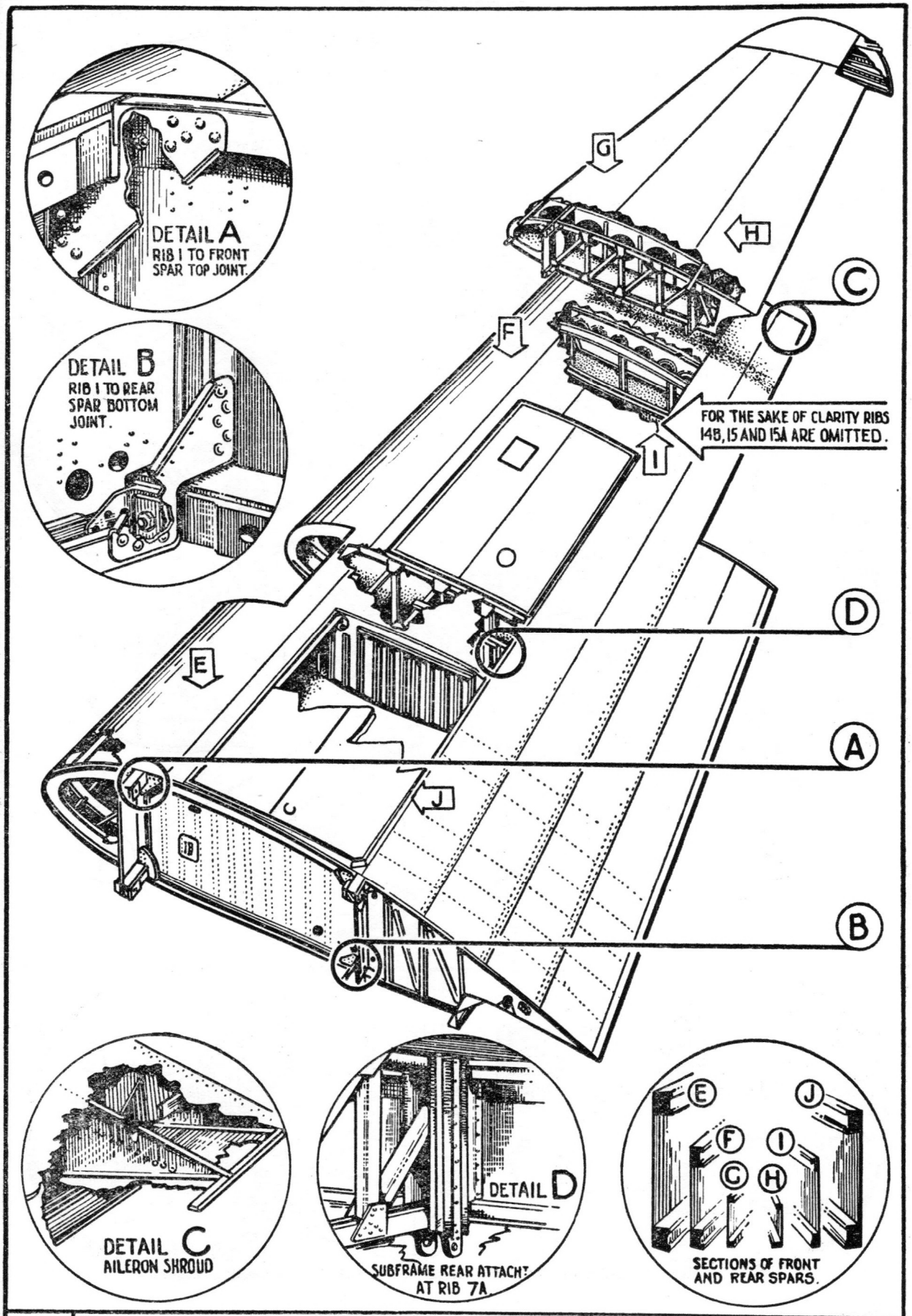

2	MAIN PLANE INTERMEDIATE AND OUTER SECTIONS	2

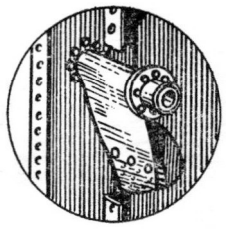

TANK STRAP ATTACHMENT ON TANK RIB AT FRONT SPAR.

TANK STRAP ATTACHMENT ON TANK RIB AT REAR SPAR.

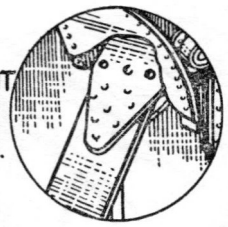

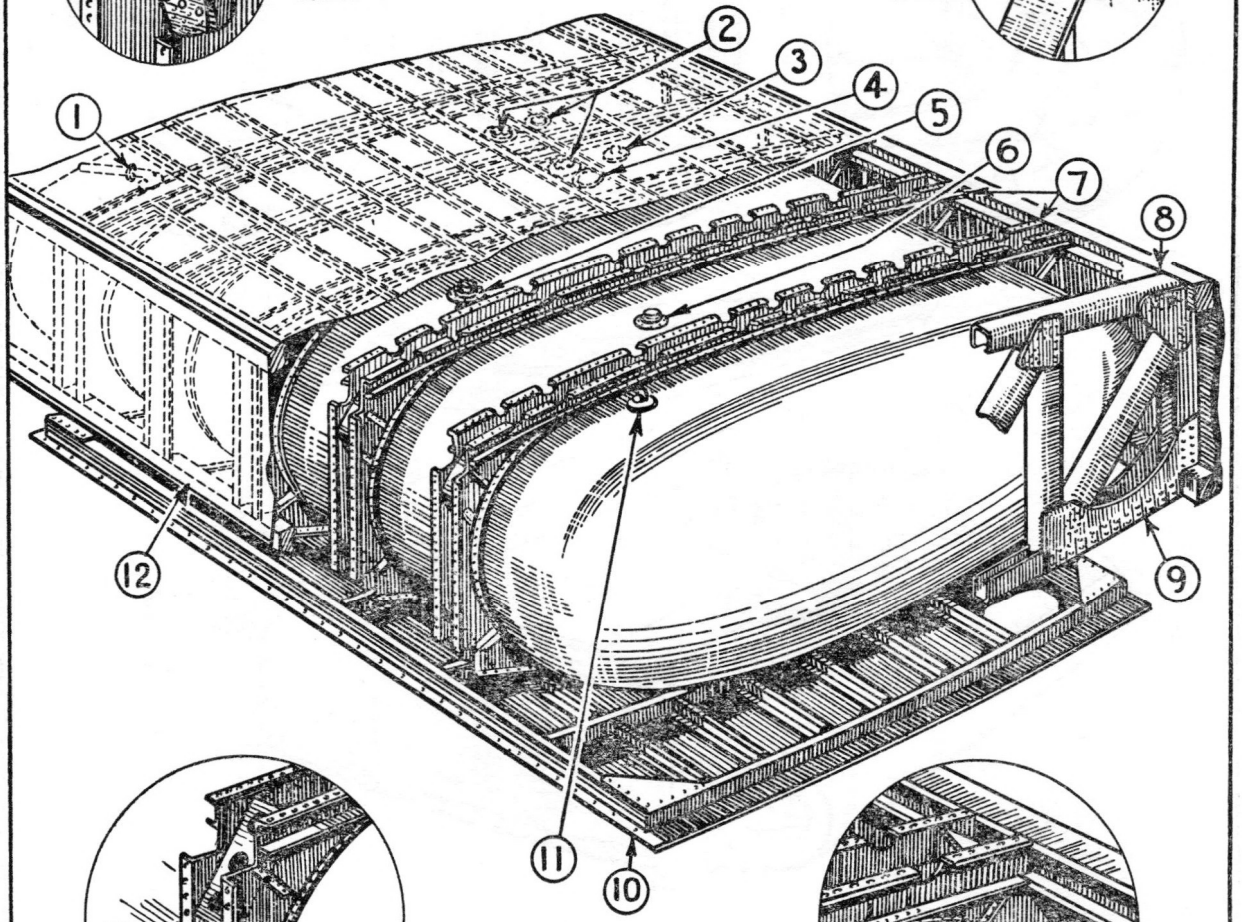

TANK RIB AT FRONT SPAR

1. AUXILIARY TANK CONNⁿ
2. INSPECTION DOORS IN TANK
3. JETTISON ADAPTOR
4. AIR VALVE
5. FILLER CAP
6. FUEL LEVEL GAUGE.
7. TANK BEARER RIBS
8. REAR SPAR
9. INBOARD ENGINE RIB
10. TANK ACCESS DOOR
11. AIR VENT
12. FRONT SPAR

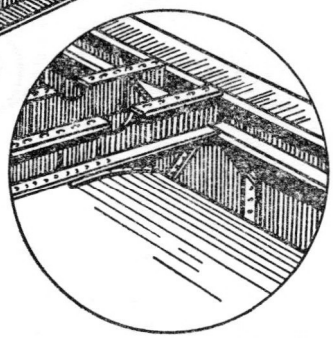

TANK RIB AT REAR SPAR

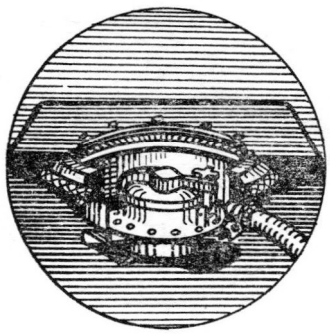

FILLER CAP AND DRIP TRAY.

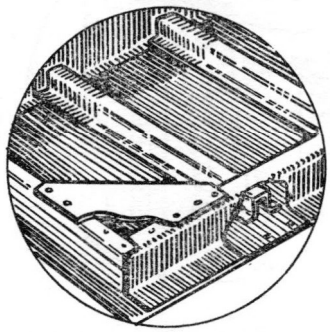

CORNER OF ACCESS DOOR

3	Nº 1 FUEL TANK MOUNTING	3

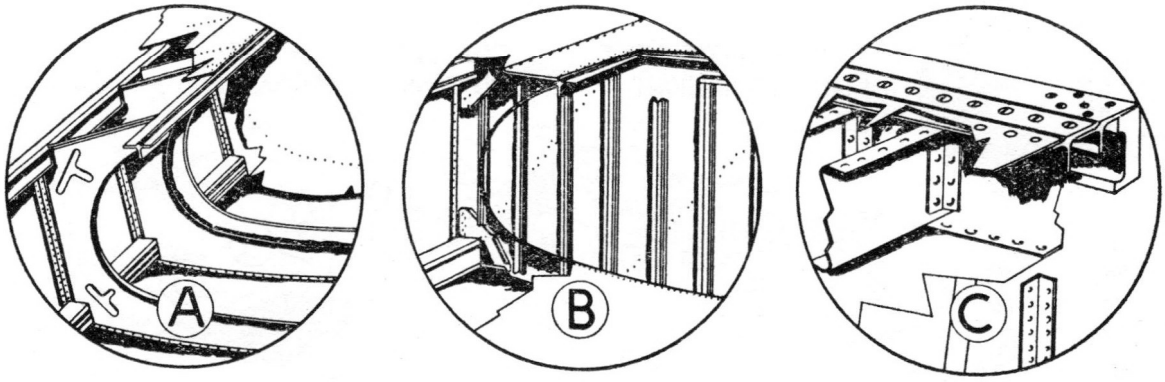

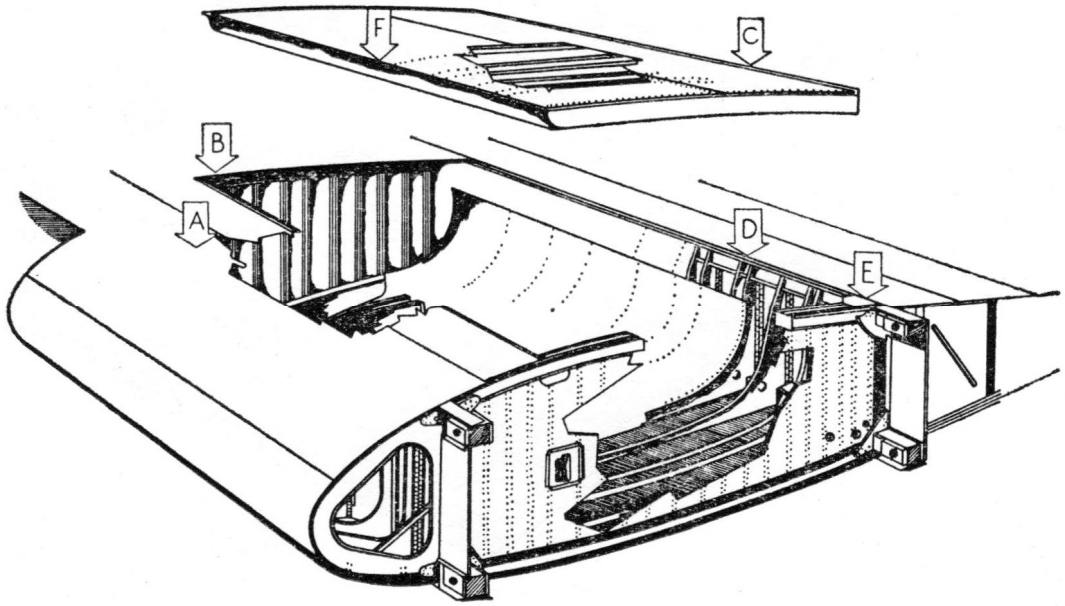

Nº 2 TANK COMPARTMENT ONLY ILLUSTRATED HERE. CONSTRUCTION OF COMPARTMENT FOR Nº 3 TANK IS HOWEVER IDENTICAL.

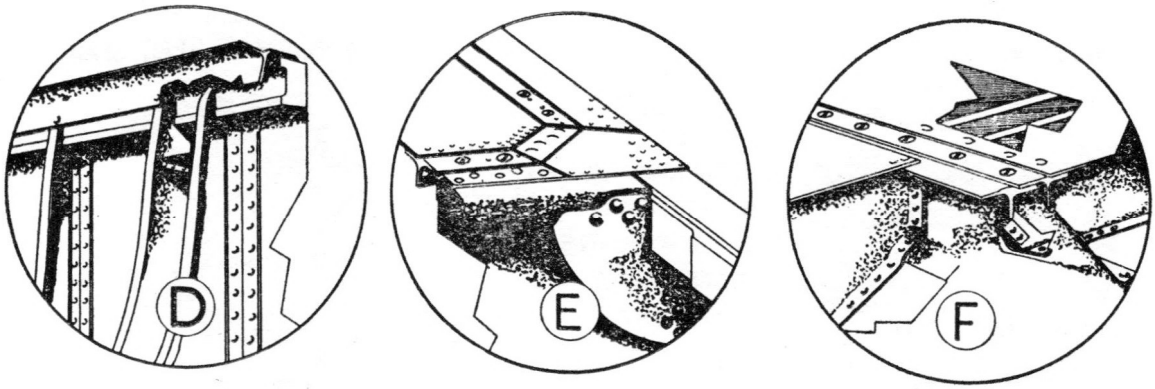

4	Nº 2 & 3 FUEL TANK COMPARTMENTS	4

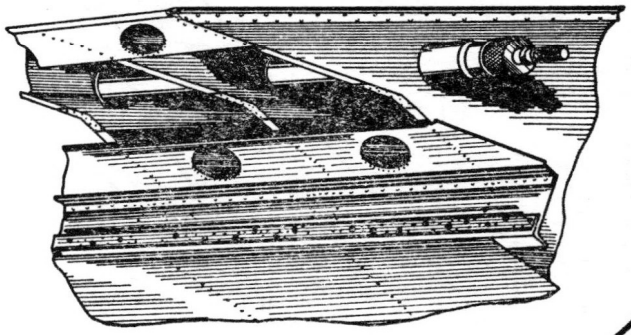

STRUCTURE AT FALSE SPAR
LESS FLAP.

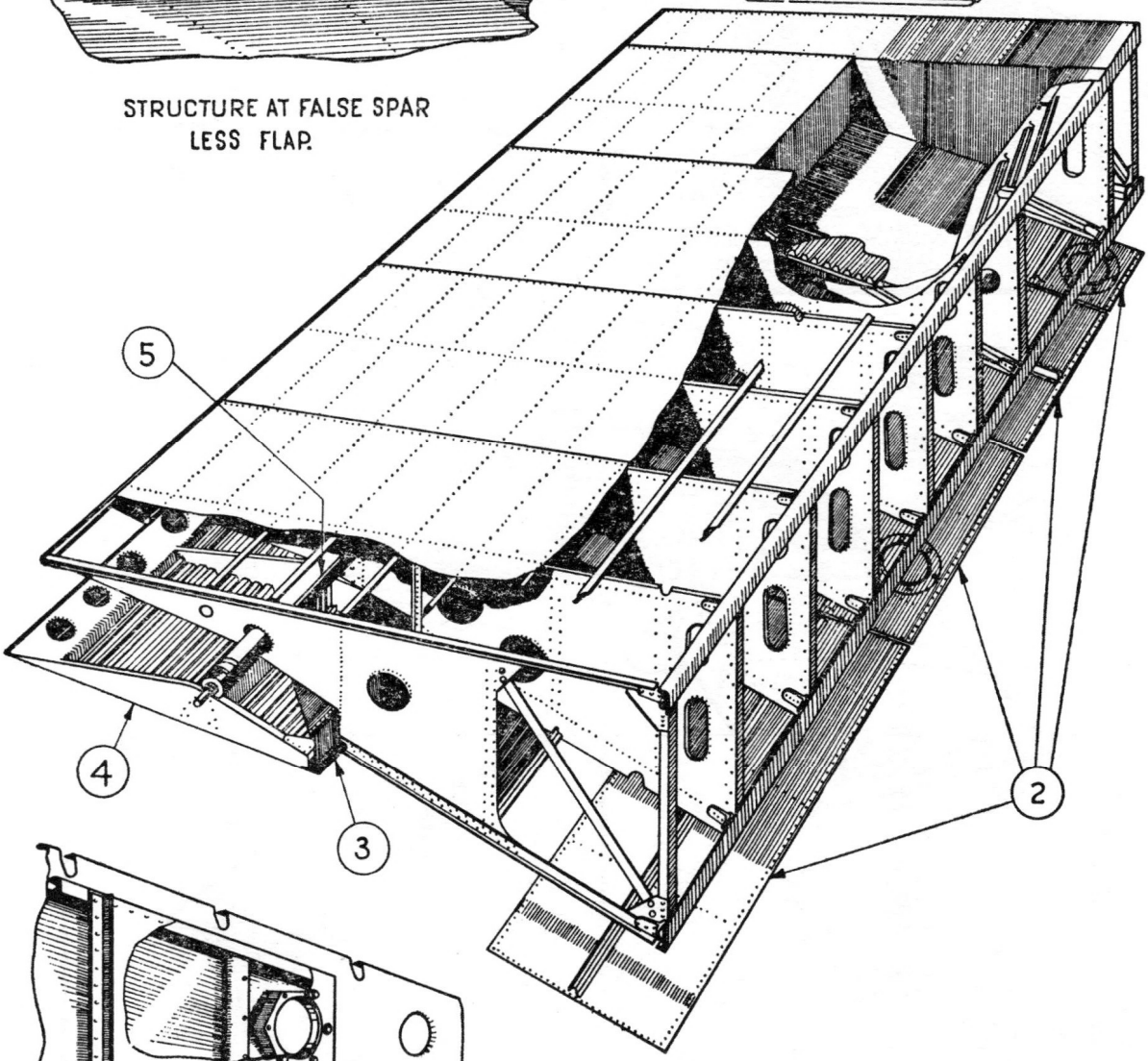

STRUCTURE OF RIB
AFT OF FALSE SPAR.

1. DINGHY STOWAGE COVER.
2. ASSEMBLY PANELS.
3. FALSE SPAR.
4. FLAP
5. FLAP OPERATING MECHANISM.

5	MAIN PLANE-CENTRE SECTION-TRAILING EDGE	5

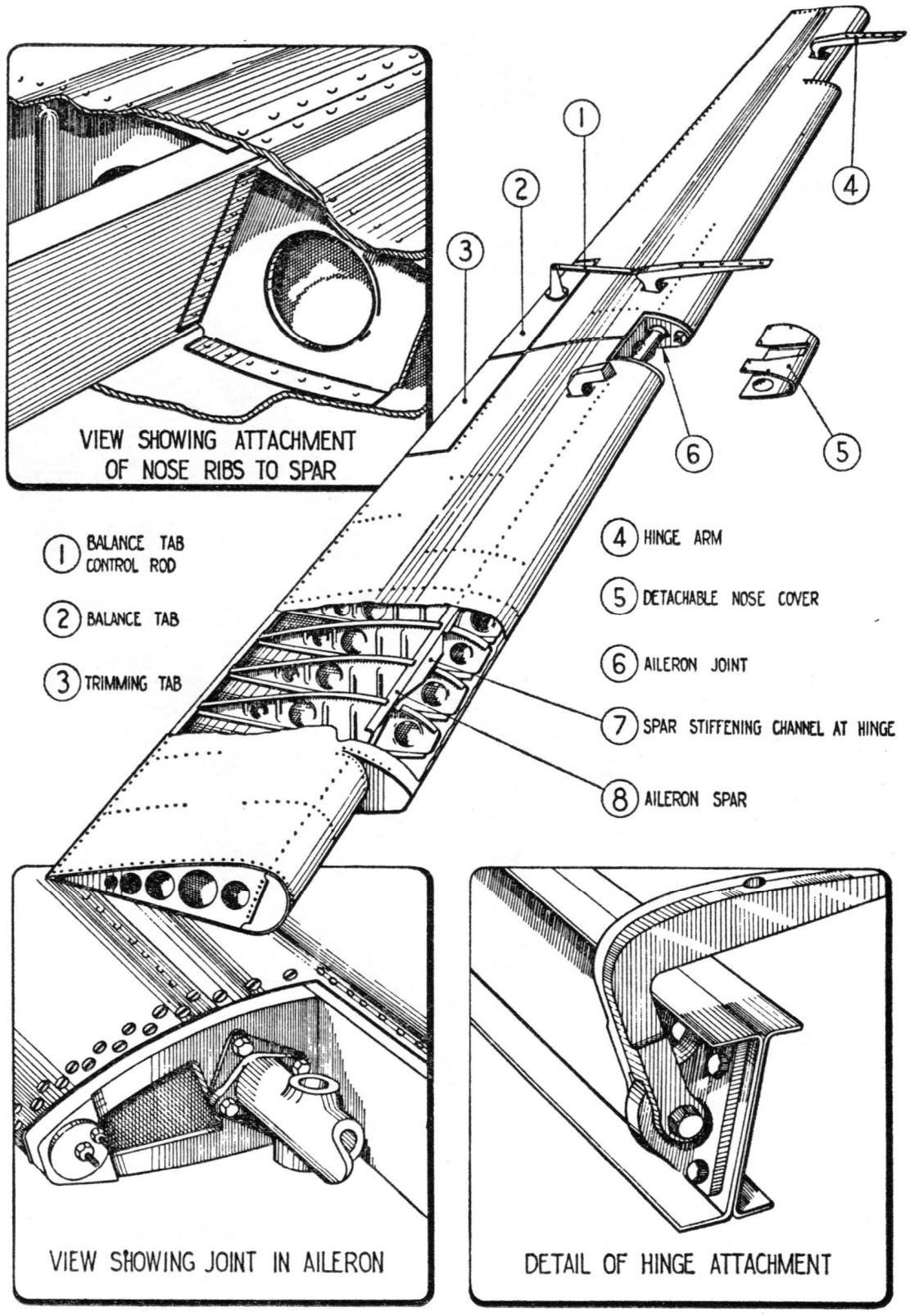
VIEW SHOWING ATTACHMENT OF NOSE RIBS TO SPAR
1 BALANCE TAB CONTROL ROD
2 BALANCE TAB
3 TRIMMING TAB
4 HINGE ARM
5 DETACHABLE NOSE COVER
6 AILERON JOINT
7 SPAR STIFFENING CHANNEL AT HINGE
8 AILERON SPAR
VIEW SHOWING JOINT IN AILERON
DETAIL OF HINGE ATTACHMENT

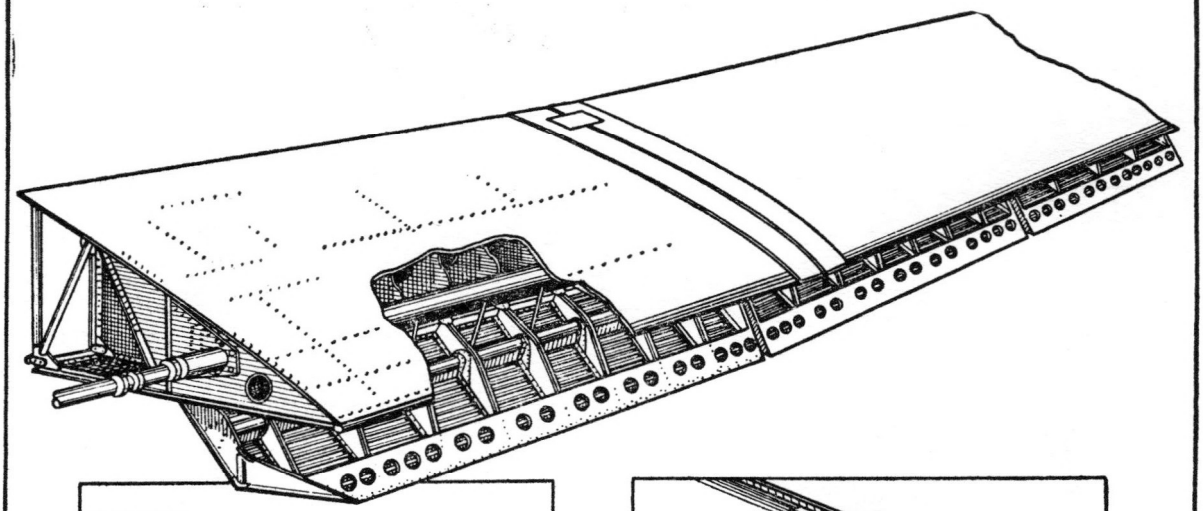

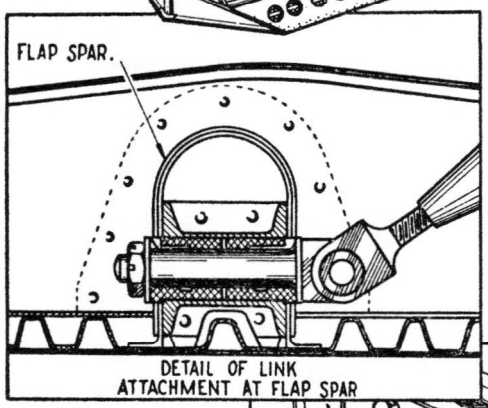

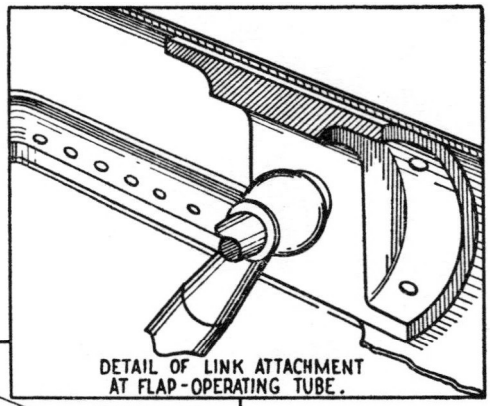

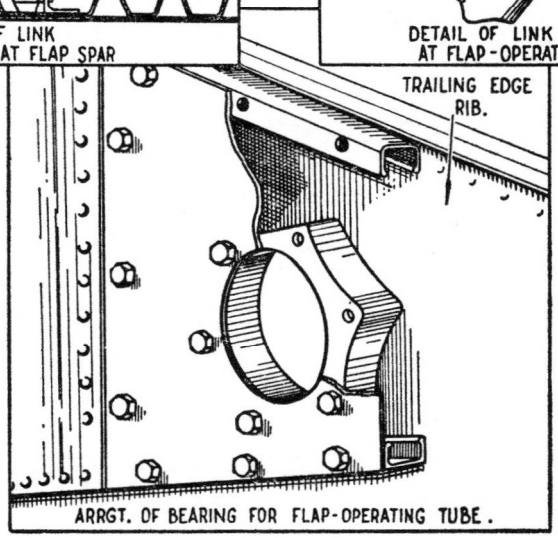

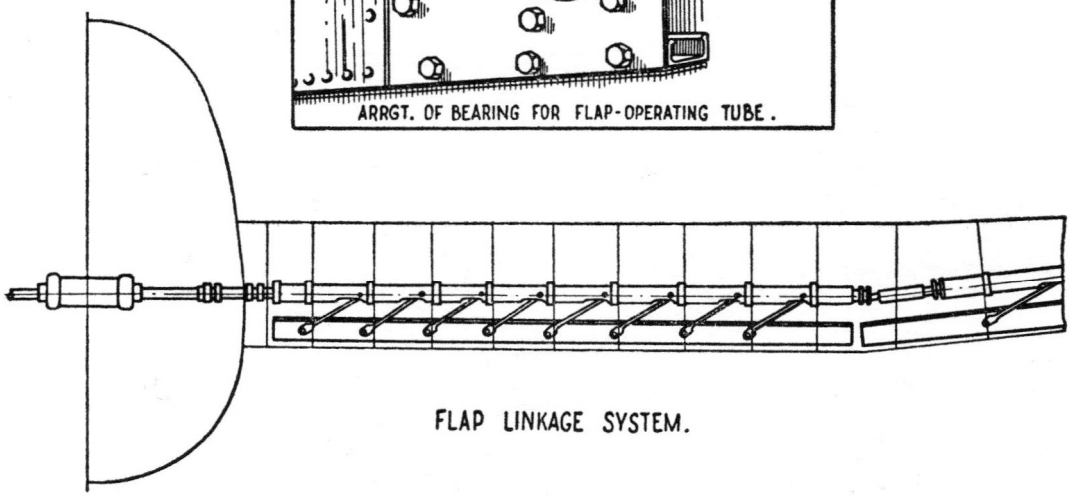

FLAP LINKAGE SYSTEM.

7	FLAP	7

SECTION 7 — CHAPTER 3

Tail Unit

CONTENTS

	Para.
GENERAL	1
TAIL PLANE	3
Trimming tab	5
Balance tab	6
FINS	7
RUDDERS	8
Trimming tab	9

ILLUSTRATIONS

	Fig.
Tail plane	1
Fin and rudder	2
Mounting of fin to tail plane	3
Elevator...	4

Tail Unit

General

1. The tail unit consists of a tail plane, with fins and rudders at the two extremities. The tail plane is made in halves, which are bolted together inside the fuselage. The front spar is bolted to fuselage former 35, and the rear spar to former 38. The fins are also bolted to the spars where they project beyond the tail plane.

2. The four main control surfaces (two elevators and two rudders) are each fitted with a trimming tab at the trailing edge; in addition, a balance tab is fitted on each elevator.

Tail Plane

3. The tail plane (*see* Fig. 1) consists of port and starboard sections, each built up of a front and rear spar, with sixteen ribs braced by transverse stringers, and a light alloy skin riveted to the ribs and stringers. The leading edge of the tail plane is stiffened by intermediate nose riblets riveted to the front spar. The spars consist of top and bottom extruded angles, with a web riveted between them. The ribs are made up in two sections, the nose, fitted forward of the front spar, and the major section, fitted between the spars. These sections are formed from light-alloy sheet, flanged at the upper and lower portions; they are also strengthened with vertical top-hat section stiffeners, except rib 14, which has angle stiffeners. At the intersection of the ribs and stringers, the ribs are cut away and secured to the stringers by small attachment brackets. The main ribs, *i.e.,* between the spars, are also cut away and fitted with attachment brackets to the spar booms. Three hinge brackets for each elevator are bolted to the rear spar and are of light alloy; laminum washers are fitted as necessary between the spar and the brackets to ensure the position of the hinge line. The inner hinge on each side is the datum hinge, and is secured in its housing by circlips. The elevator does not extend the full length of the tail plane, as a small detachable trailing edge portion is fitted to the rear spar of the tail plane at the outer end and is cut away to allow for the movement of the rudder.

Elevators

4. The two elevators are connected inside the fuselage by a steel torque tube. This is fastened to steel liners in the inboard ends of the elevator spars by couplings fitted with spring steel shims. The spars are tubular, and are cut away in three places for the hinges. The eyebolts which form the hinges are fitted with ball races and secured in bushes through the steel hinge boxes welded in the elevator spar. Each spar passes through holes in the sixteen pressed light alloy ribs and is riveted to angle collars attached to them. Angle section stringers are riveted to the ribs, which are cut away to receive them, and the trailing edge is formed of a "V" section light-alloy channel. The skin, also, is of light-alloy sheet, and is riveted to the ribs, stringers and trailing edge with mushroom head rivets on the upper surfaces, and pop-dome rivets on the under surface. In the leading edge of the elevator there is a mild steel bar which acts as a mass balance, while a short tube at the inboard end makes provision for additional weights if required for mass balance adjustment. (*See* also illustrations in Section 5.)

Trimming Tab

5. The trimming tabs are at the inner end of the elevators. The tabs are made of three light-alloy formers and three wooden formers covered with a light-alloy skin, the components being triangular in section. Attachment to the elevators is by piano hinges on the top surfaces. (*See* Fig. 4.)

Balance Tab

6. An additional tab is fitted outboard of the trimming tab, and is operated by means of a connecting rod between a lever on the tab and an arm on the elevator hinge bracket (*see* Fig. 4). The loads on the moving elevator are thus balanced by the movement of the tab.

Fins

7. The fins are built up on front, rear and intermediate fin posts, with vertical stringers and intercostals, a nose stiffening channel and nine horizontal ribs. The structure is covered with light-alloy sheet (Fig. 2). The fin posts consist of light-alloy webs to which extruded angle booms are riveted top and bottom. On the front post light-alloy packing strips are riveted to the face of the web at its four intermediate ribs, high tensile steel stiffeners are riveted in the flange of the booms at rib 7, and a stiffening plate is located between ribs 6-7 and 7-8. The rear fin post has additional stiffeners to take the three rudder hinge brackets, which are bolted to the rear face; the tip is a laminated synthetic fibre block faired to aerofoil contour. The fin ribs are flanged at the edges and cut away for the stringers and intercostals attached to the ribs at these points by small brackets. Flanged lightening holes give additional stiffness to the rib web. The leading edge is of laminated mahogany, the skin being attached by means of countersunk head wood screws. An aerial pulley attachment bracket is fitted in the top of the fin, with an access door in the outboard skin. Detachable panels are provided in the skin to give access to the rudder trimming tab controls.

8. The rudders are of similar construction to the fins (*see* Fig. 2), and are attached to the fins by three ball bearing hinges which are bolted to the rear face of the fin post. The rudder is of horn-balance type, with a full-length rudder post and fourteen lateral ribs in the main section, strengthened by intercostals extending between ribs 1B and 2A (numbering from the top, downward), and an angle stiffener running from rib 4 to rib 7; the three lowermost ribs of that section are continued forward to form the upper three ribs of the forward facing horn-balance which has four small vertical intercostals. The unit is covered with light-alloy sheet in which are detachable panels for access to trimmer tab controls. At the front of the rudder post is a shroud which is cut away for the hinges, cuffs being fitted round these after assembly. The trailing edge is a light-alloy extrusion. Mass-balance weights on tubular arms are bolted to each side of the rudder post at rib 2—which is the fourth rib from the top. The structure is further strengthened by angle members forming the mounting for the rudder lever between ribs 8 and 9.

Trimming Tab

9. The rudder trimming tabs are hinged into the trailing edge of the rudder and are constructed from seven blocks, a large intermediate block which carries the operating lever, and a fairing block at the lower end, all covered with light-alloy skin. The nose portion, to which the trimmer hinge is attached, is of light-alloy skin in U-section and riveted through the main, or rear section, skin. The operating lever is bolted by flat-head 4-BA bolts through the nose and rear sections at the intermediate block, with a shaped light-alloy packing between the base of the lever and the outer face of the skin covering. Chamfered washers are fitted under the 4-BA thin locknuts.

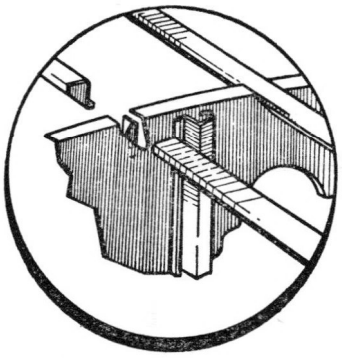

ATTACHMENT OF STRINGERS

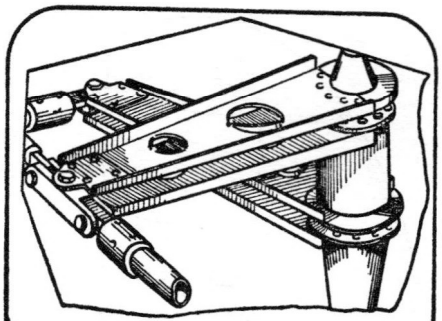

RUDDER CONTROL LEVER

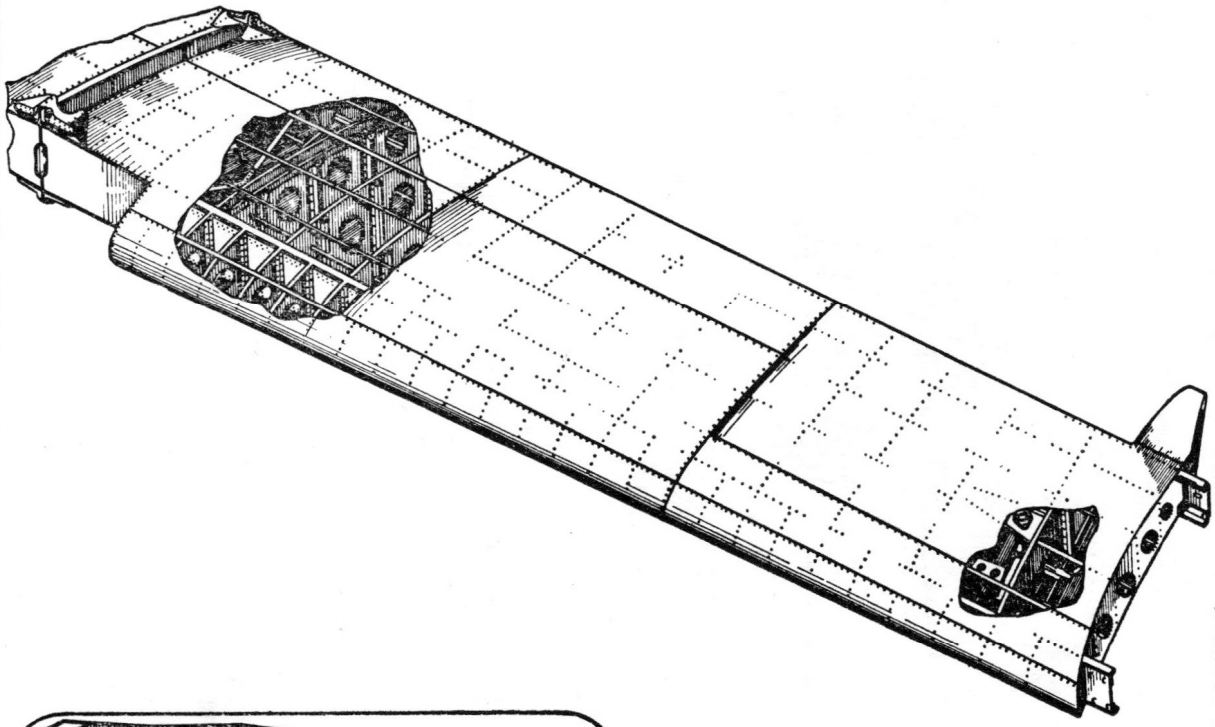

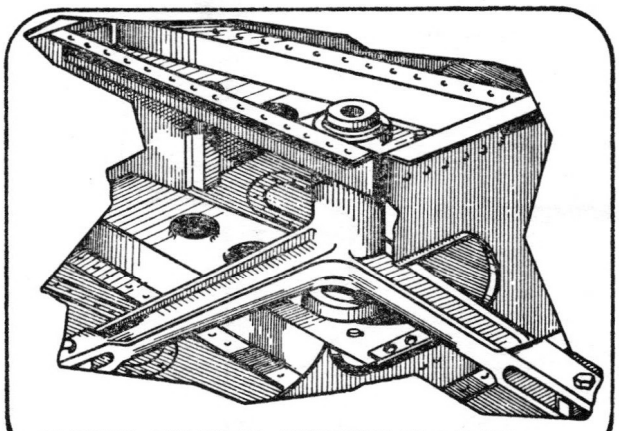

RUDDER CONTROL OPERATING LEVER

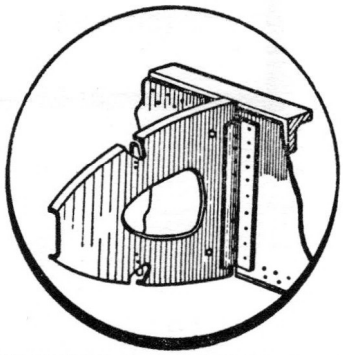

ATTACHMENT OF NOSE RIBS

I	TAIL PLANE	I

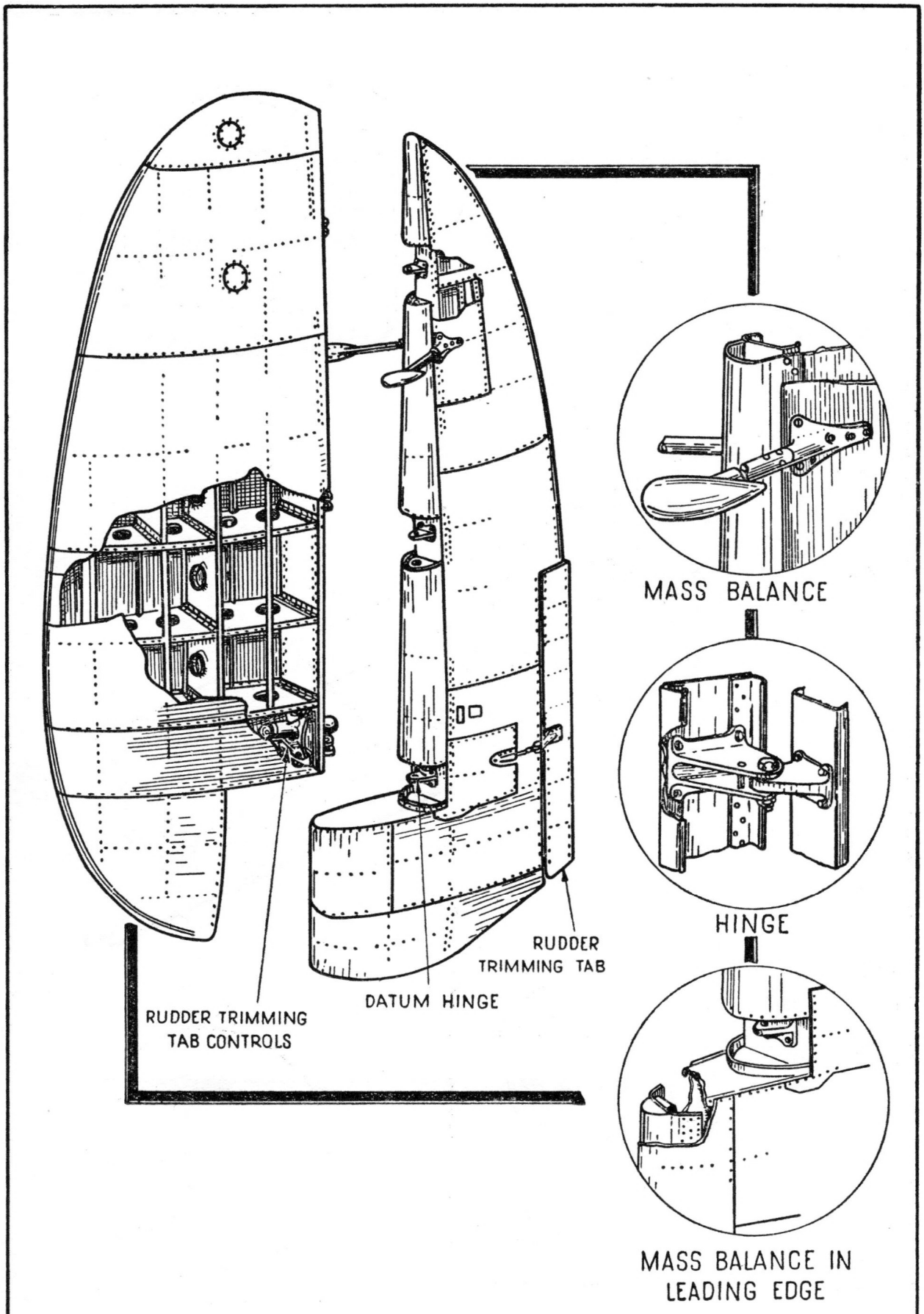

2	FIN & RUDDER	2

FRONT SPAR TO FRONT FIN POST.

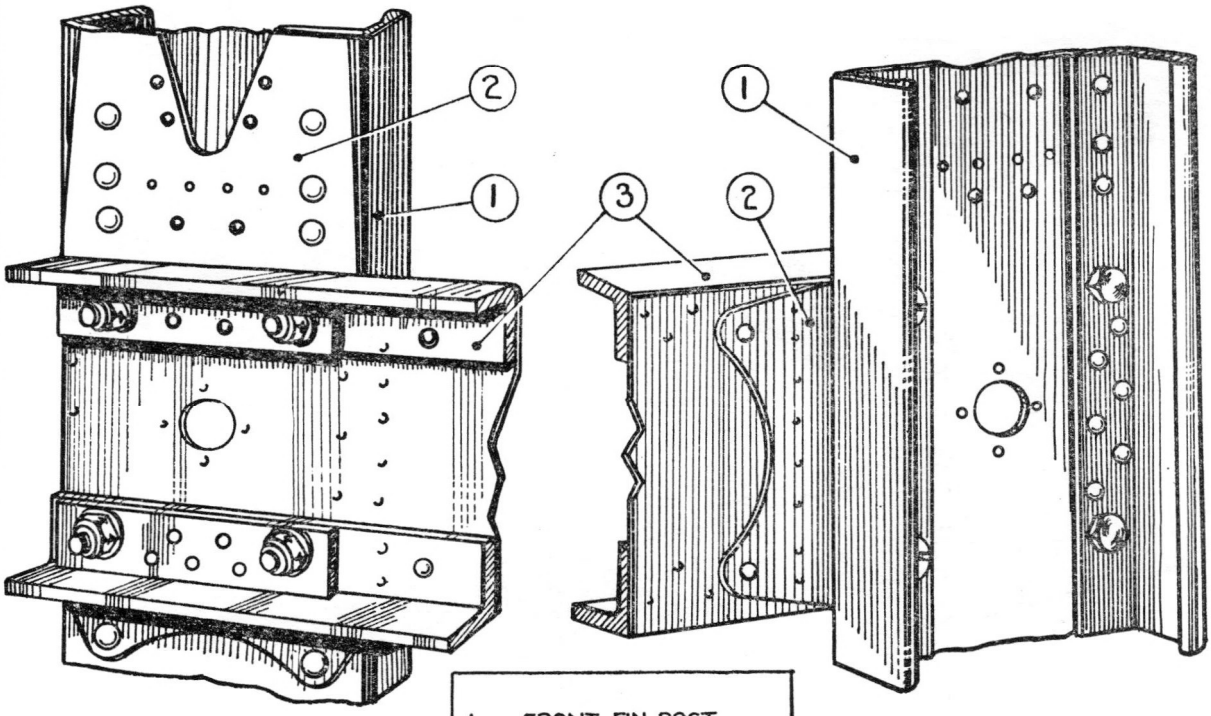

VIEW LOOKING FORWARD

1. FRONT FIN POST.
2. REINFORCING PLATE.
3. TAIL PLANE FRONT SPAR
4. REAR FIN POST.
5. RUDDER TRIMMING TAB CONTROL BRACKET.
6. RUDDER HINGE BRACKET
7. TAIL PLANE REAR SPAR.

VIEW LOOKING AFT

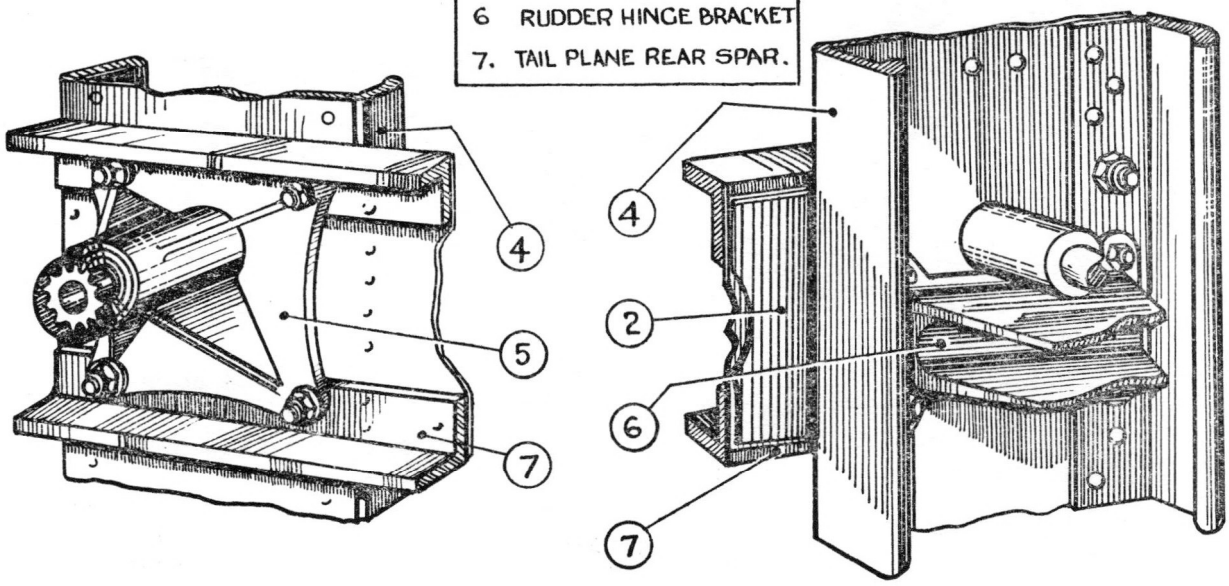

VIEW LOOKING AFT.

VIEW LOOKING FORWARD.

REAR SPAR TO REAR FIN POST

3	MOUNTING OF FIN TO TAIL PLANE	3

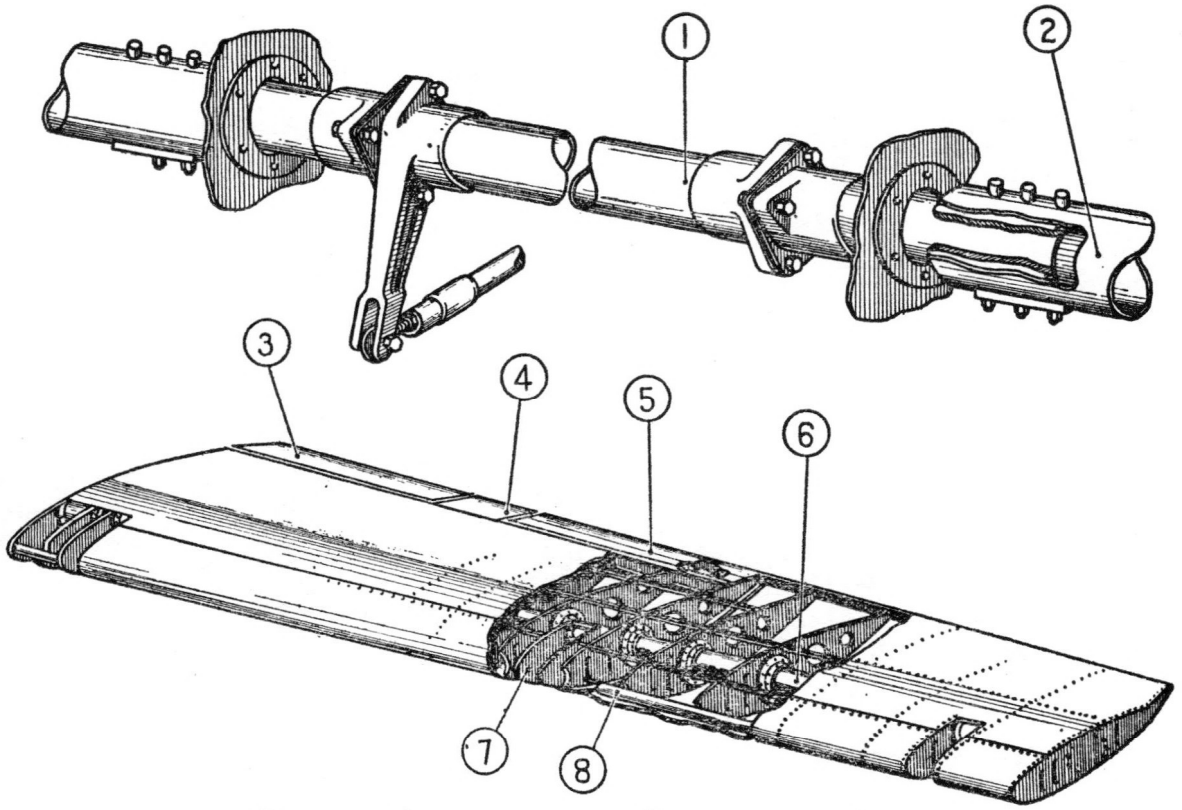

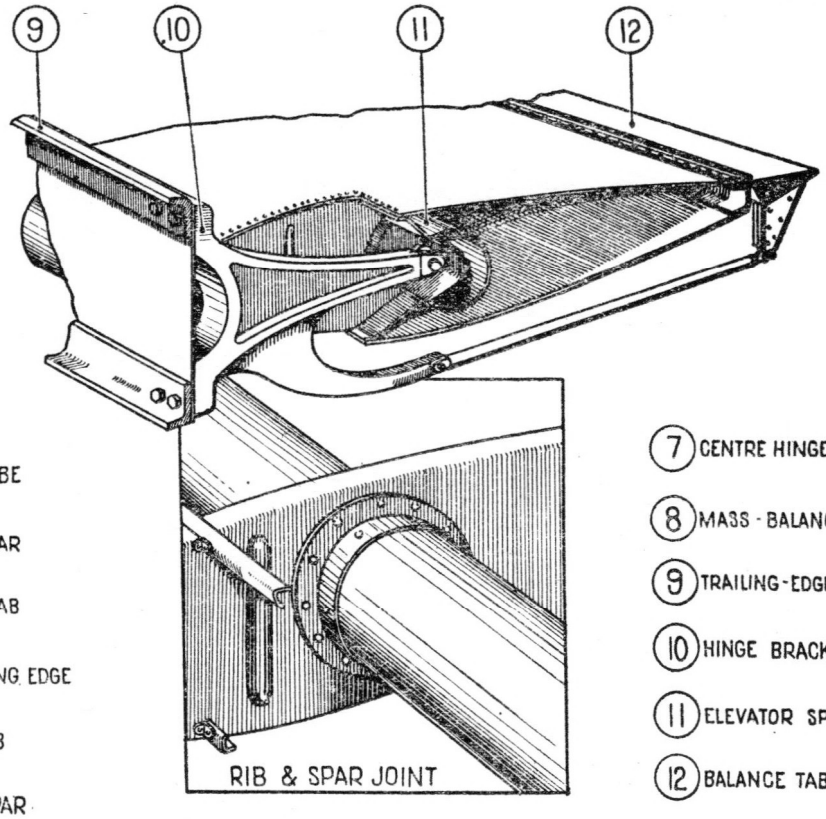

1. TORQUE TUBE
2. ELEVATOR SPAR
3. TRIMMING TAB
4. FIXED TRAILING EDGE
5. BALANCE TAB
6. ELEVATOR SPAR
7. CENTRE HINGE BOX
8. MASS - BALANCE WEIGHT
9. TRAILING-EDGE SPAR
10. HINGE BRACKET
11. ELEVATOR SPAR
12. BALANCE TAB

SECTION 7 — CHAPTER 4

Flying Controls

CONTENTS

	Para.
CONTROL COLUMN	2
RUDDER PEDALS	3
AILERON CONTROLS	4
ELEVATOR CONTROLS	5
RUDDER CONTROLS	6
TRIMMING TAB CONTROL GEARBOX ...	7
ELEVATOR TAB CONTROLS —	
Trimming tab	8
Balance tab	9
RUDDER TRIMMING TAB CONTROLS ...	10
AILERON TAB CONTROLS —	
Trimming tab	11
Balance tab	12

ILLUSTRATIONS

	Fig.
Aileron controls	1
Elevator controls	2
Rudder controls	3
Control column and cross shaft	4
Rudder pedals	5
Aileron trimming tab controls	6
Elevator trimming tab controls	7
Rudder trimming tab controls	8
Trimming tab control gearbox	9

Flying Controls

1. The flying controls are:—

(i) *Ailerons.*—Controlled by rotation of the hand wheel on the control column.

(ii) *Elevators.*—Controlled by fore-and-aft movement of the control column.

(iii) *Rudders.*—Controlled by movement of pendulum type rudder pedals mounted behind the pilot's instrument panel.

(iv) *Trimming Tabs.* — Controlled by hand wheels on the trimming tab control box, mounted on the pilot's floor at the starboard side of the pilot's seat.

A Mk. VIII automatic pilot, operated by an Arrow type compressor on the port inboard power plant, is also fitted.

CONTROL COLUMN

2. The control column, which is of rectangular section, passes through the pilot's floor and is bolted to a cross-shaft beneath (see Fig. 4). A panel on the aft face gives access to the aileron controls within the column. The hand wheel at the top of the control column rotates on a spindle, which carries a sprocket for operating the aileron controls, and a spur gear which comes into operation when the dual control arm is in position. The dual control arm, when fitted, projects horizontally from the control column head, and carries a second hand wheel connected by chains and sprockets with a gear which meshes with that in the control column.

RUDDER PEDALS

3. The rudder is controlled by means of conventional, pendulum type pedals pivoted on torque shafts behind the pilot's instrument panel (see Fig. 5). The shafts are interconnected by spur gears, causing them to rotate in opposite directions. To limit the movement of the pedals a stop bracket is fitted at the forward end of the pilot's floor. The pedals themselves are of tubular construction, and each footrest can be independently adjusted by lifting it up and moving it over the spring-loaded ratchet mechanism provided on each arm of the pedals. A spring locking catch on each pedal has to be released before adjustment can be made.

AILERON CONTROLS

4. The ailerons are controlled by rotation of the spectacle type hand wheel, which is connected by chains (see detail A, X and Y, Figs. 1 and 4), sprockets and tie rods to a torque shaft on the main floor, beneath the pilot's floor (see Fig. 1). Similar connections from the torque shaft run aft on the port side of the fuselage to a double-armed lever on the rear face of the rear spar (see detail B). The lever is a light alloy forging, mounted on an extruded channel section bearer, a stop bracket being provided to limit the movement. A jointed light alloy push-pull control tube, attached to the top arm of the lever and supported by Tufnol bearings in the main plane ribs, extends outboard to port and starboard to intermediate channel section levers, near the outboard ends of the main plane centre section. The levers are pivoted at the top by a steel tube, which is bolted to a bracket built up from two angle members; these in turn are bolted to the aft face of the rear spar web near the outboard ends of the main plane centre section (see Fig. 1, detail D). Another control tube fixed to the bottom of each lever extends to the lever mounted on the fore-and-aft torque shaft in the trailing edge of the main plane at the junction between the two sections of the aileron. At the rear end of the torque shaft is mounted a rocking lever which actuates the aileron operating fork. The operating fork is secured to a cylindrical forging by a centre pin passing through the axis of the forging, which connects the two sections of the aileron. The lever on the torque shaft and the aileron operating fork are both light alloy forgings, with ball races at all bearing points. A self-aligning bearing is used where the rocking lever connects with the aileron operating fork (see Fig. 1, detail C).

ELEVATOR CONTROLS

5. To the lower end of the control column, on the underside of the pilot's floor, is attached a cross-shaft mounted on two ball race bearings. This shaft consists of a forging bolted to the base of the column and a transmission tube of non-magnetic steel, on the port end of which is a lever for the elevator push-pull tube and a sprocket quadrant for the automatic pilot chain. Both the lever and quadrant are light alloy forgings. Stop brackets are fitted to the pilot's floor to limit the fore-and-aft movement of the control column (see Fig. 4). From the elevator lever a jointed push-pull control tube, supported by spherical bearings, runs aft through the spars and formers along the port side of the fuselage (see Fig. 2). The tube terminates in a square section rod supported, to prevent turning, in square bearings of mild steel in formers 33 and 34. From a bracket on the square rod a connecting rod extends aft to a lever on the underside of the elevator spar torque shaft (see Chapter 3, Fig. 4).

RUDDER CONTROLS

6. The rudder control push-pull rods (see Fig. 3) are similar to those for the elevator, running from a bracket on the port rudder pedal (see Fig. 5) to a square section rod at formers 32 and 33, from which a connecting rod operates a lever between the tail plane spars. This lever is mounted on a vertical spindle which revolves in ball bearings, the bearing housing being attached to the top and bottom booms of rib 1. Attached to this lever is a second lever which is interconnected by means of push-pull rods with one arm of an L-shaped lever at each end of the tail plane. The outer levers are light alloy forgings and are mounted in a similar manner to the centre lever. The second arm of the outer lever is interconnected with the actuating lever on the rudder by means of an adjustable connecting rod, which has a ball race fitted at each end.

TRIMMING TAB CONTROL GEARBOX

7. The control box (see Fig. 9) is a light alloy casting bolted to the pilot's floor, the end plates being detachable to allow easy access to the bevel gears which operate the various controls. These gears run in oilite bearings fitted in bosses formed in the casting. Each control has an independent indicator inset in the top of the box.

ELEVATOR TAB CONTROLS

Trimming Tab

8. The elevator trimming tabs (see Fig. 7) are operated from a hand wheel on the control gearbox, from which cables run downward to the main floor and then through the intercostals to pulley brackets on the port side of the main floor and on former C. From here the cables run aft along the port side of the fuselage through fairleads on the formers in the bomb compartment to a pulley bracket on former 39. The cables then pass up into the tail plane, around a further pulley and outboard in each direction along the tail plane. Chains attached to the ends of the cables pass around sprockets in bearings passing through the elevator spar. Each sprocket is screwed internally and has an eyebolt screwed into it which picks up a connecting rod, the other end of which is attached to the operating lever on the tab. Rotation of the sprocket moves the connecting rod, and thus the tab.

Balance Tab

9. The balance tabs on the elevators are connected to an arm on the elevator centre hinge bracket by a rod attached to a lever on the lower surface of the tab. When the elevator is moved the tab is automatically moved in the opposite direction.

RUDDER TRIMMING TAB CONTROLS

10. The rudder trimming tab (see Fig. 8) is operated from a hand wheel on the control gearbox, from which cables run downwards to the main floor and then to pulley brackets on the port side of the main floor. From here, the cables run aft along the port side of the fuselage through fairleads on the formers in the bomb compartment to pulley brackets mounted aft of former 37. The cables then pass up to a pulley bracket in the tail plane and outboard in each direction along the tail plane. Chains attached to the ends of the cables pass around sprockets on the forward face of the rear fin posts, and are themselves connected together by a balance cable along the tail plane. The sprockets are attached to shafts which incorporate universal joints at the rudder hinge line. Aft of this joint the

shaft has a turnbuckle action, and adjusts a connecting rod which actuates a short lever on the rudder trimming tab.

AILERON TAB CONTROLS

Trimming Tab

11. A trimming tab is fitted to the inboard end of each aileron, and these are operated by a hand wheel (see Fig. 6). Cables pass from the control box to three double pulleys under the floor members at formers C and D, and then aft along the starboard side of the fuselage through fairleads on the formers in the bomb compartment. Just aft of the rear spar each cable divides, the four cables running parallel to pulleys just forward of former 16, where they pass up through the floor and through the fuselage sides into the trailing edge of the main plane and outboard into the aileron to the trimming tab control gear. In the main plane the cables are supported by fairleads, and turnbuckles are provided for adjustment. The control gear consists of a cable bobbin on a screwed spindle, operating a threaded sleeve on the end of a rod connected to the tab. The assembly is supported on the aileron spar by a ball end in a socket, which is bolted to the spar web, a retaining nut being screwed finger-tight and secured with a split pin.

Balance Tab

12. A balance tab is fitted to each aileron (see Section 7, Chapter 2, Fig. 6), and is connected to an eyebolt on the aileron hinge arm by a rod attached to a lever on the upper surface of the tab. Six holes are provided in the lever to allow for adjustment.

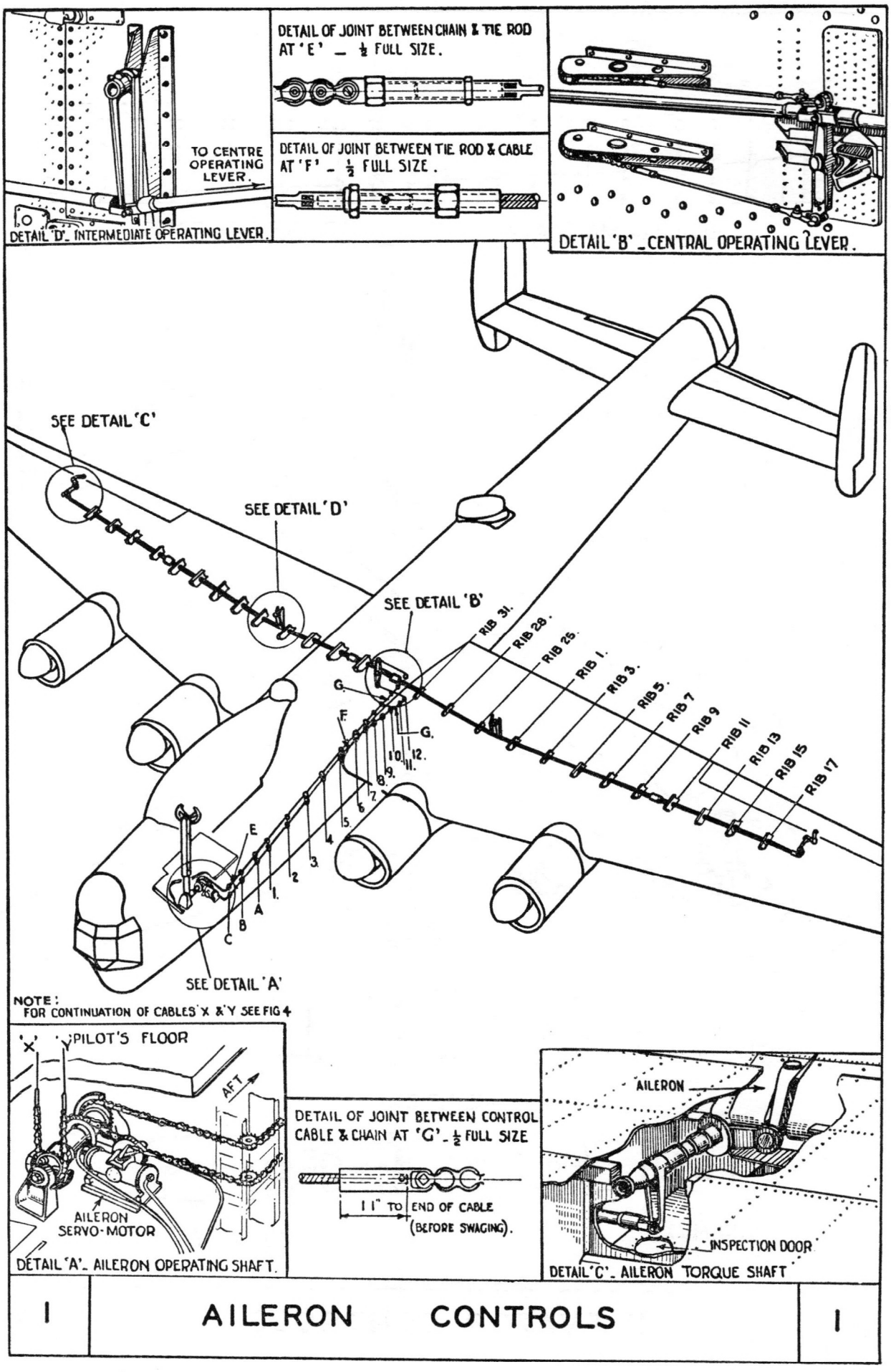

AILERON CONTROLS

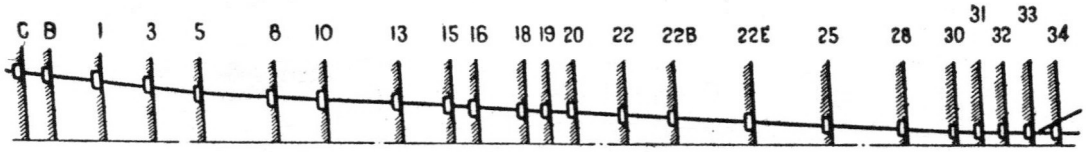

DIAGRAMMATIC ARRANGEMENT OF FORMERS & BEARINGS.

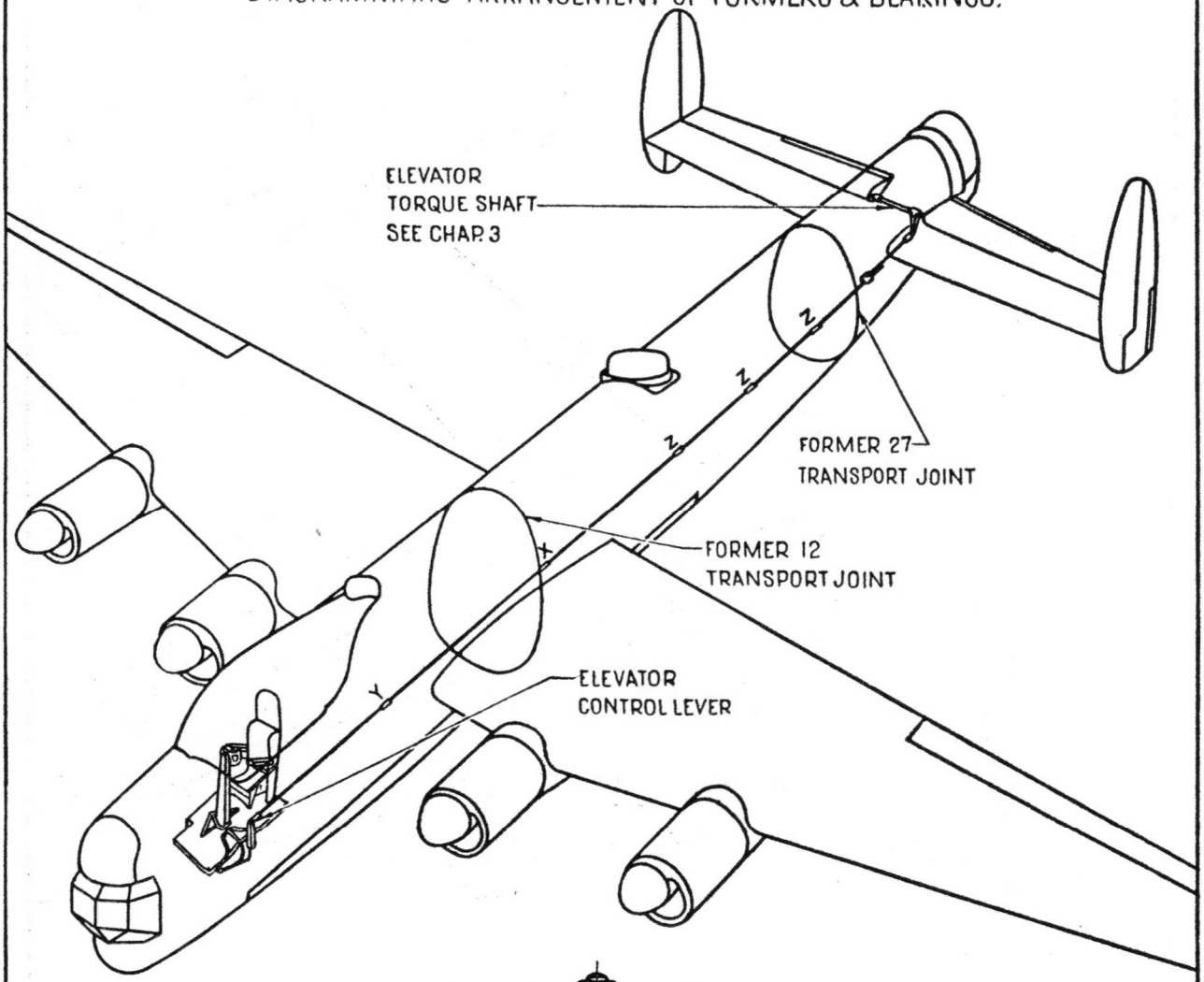

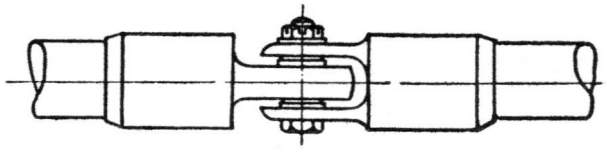

JOINT Z

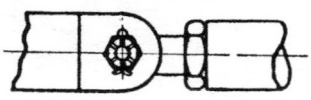

JOINT X

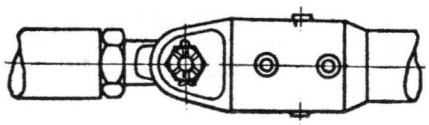

JOINT Y

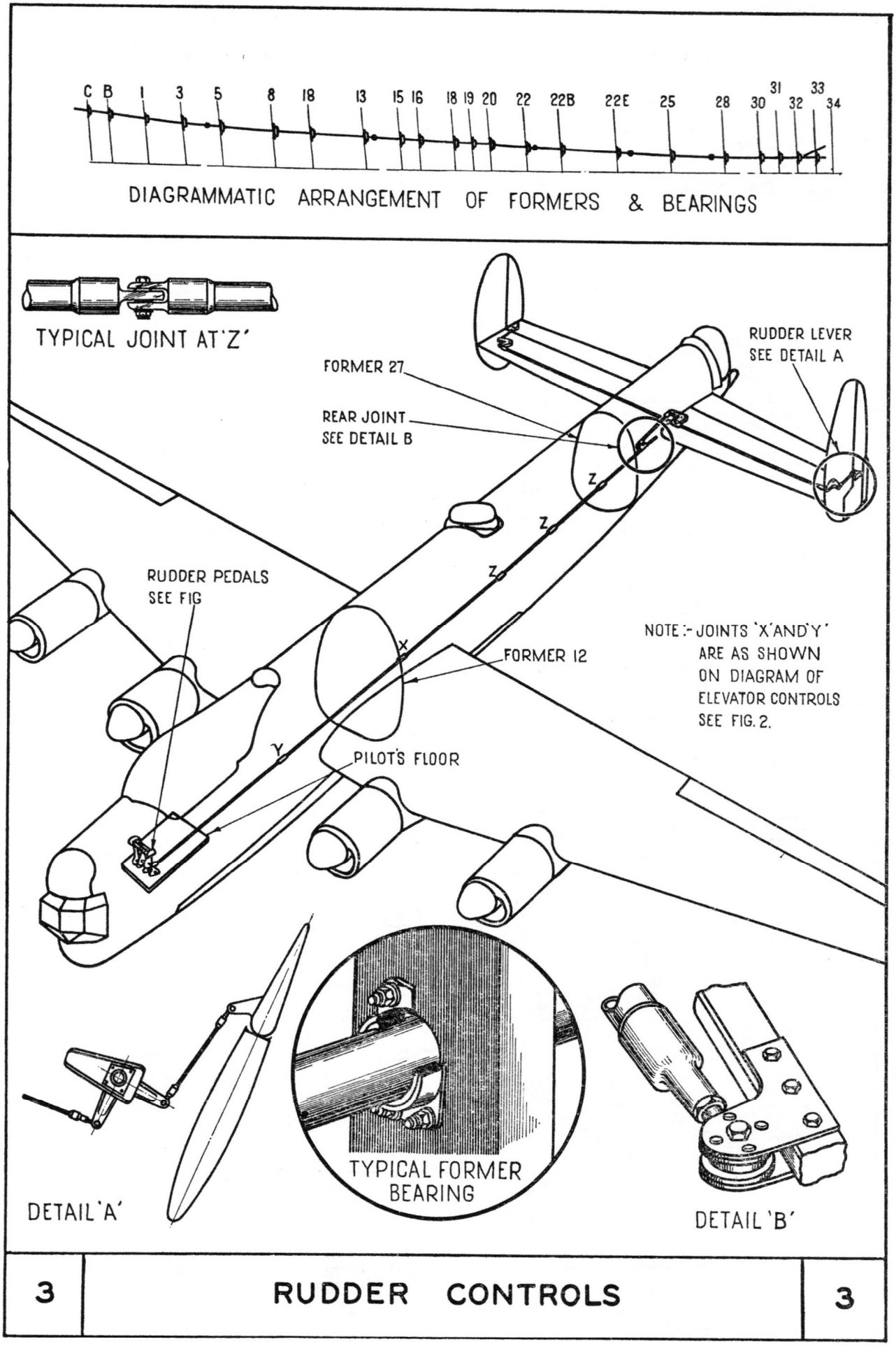

3	RUDDER CONTROLS	3

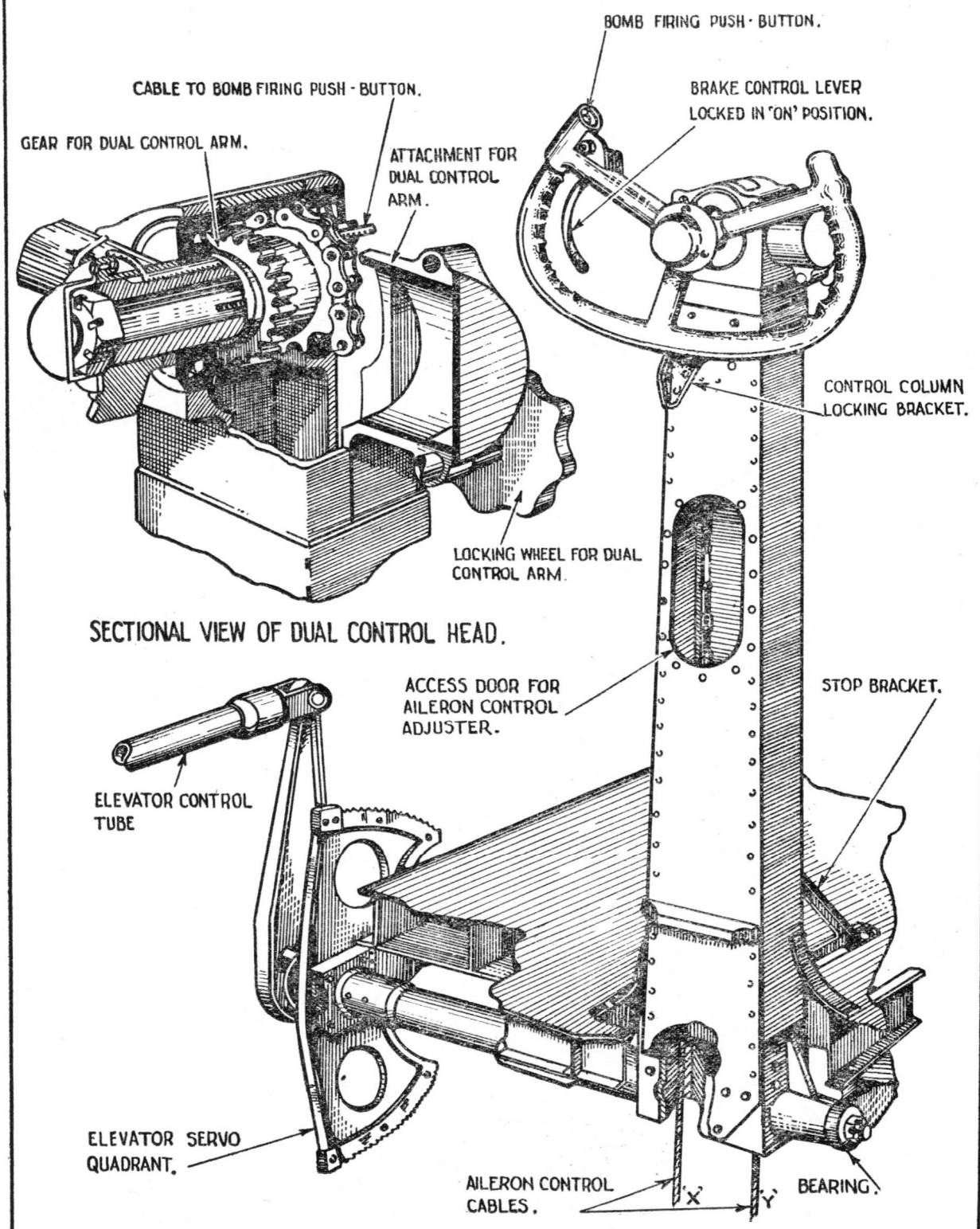

4	CONTROL COLUMN & CROSS SHAFT	4

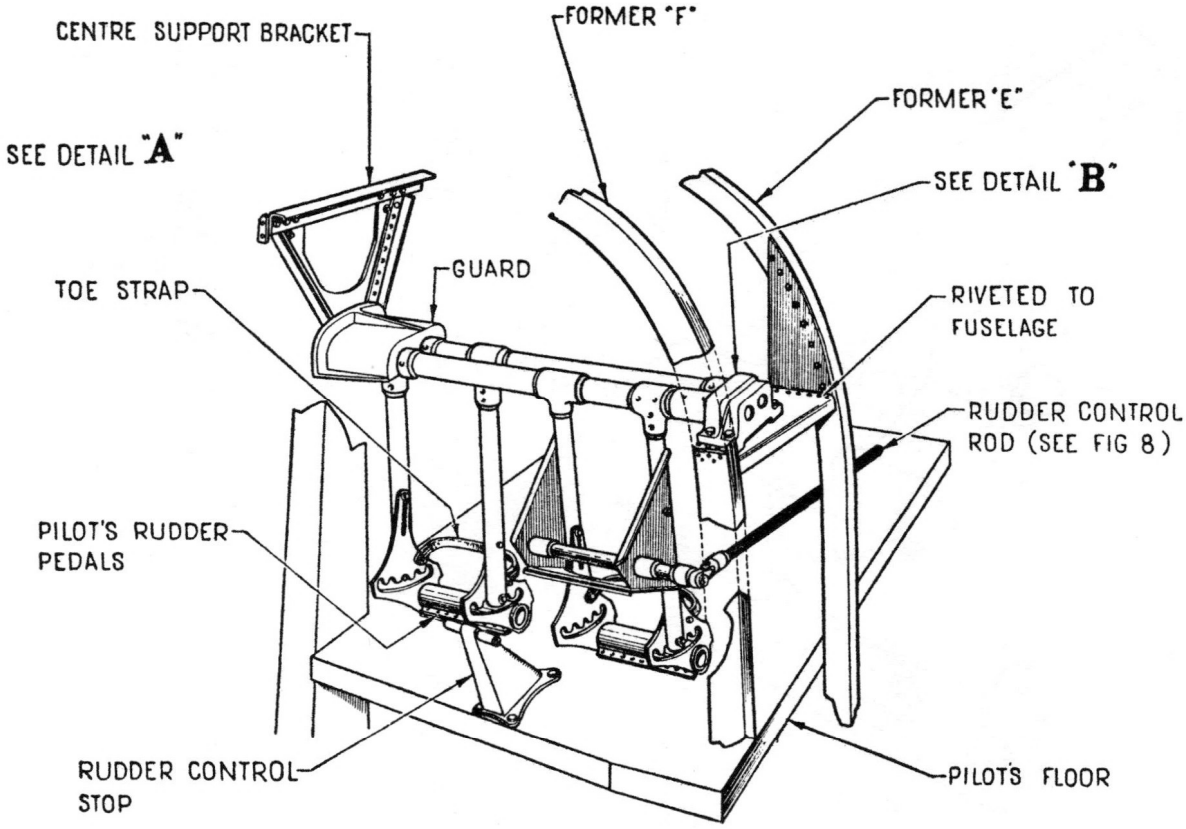

VIEW OF RUDDER PEDALS
LOOKING AFT.

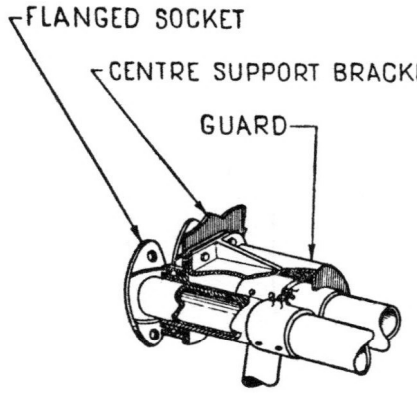

SECTIONAL VIEW OF CENTRE MOUNTING AT "A"

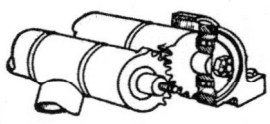

SECTIONAL VIEW OF END MOUNTING AT "B"

5	RUDDER PEDALS	5

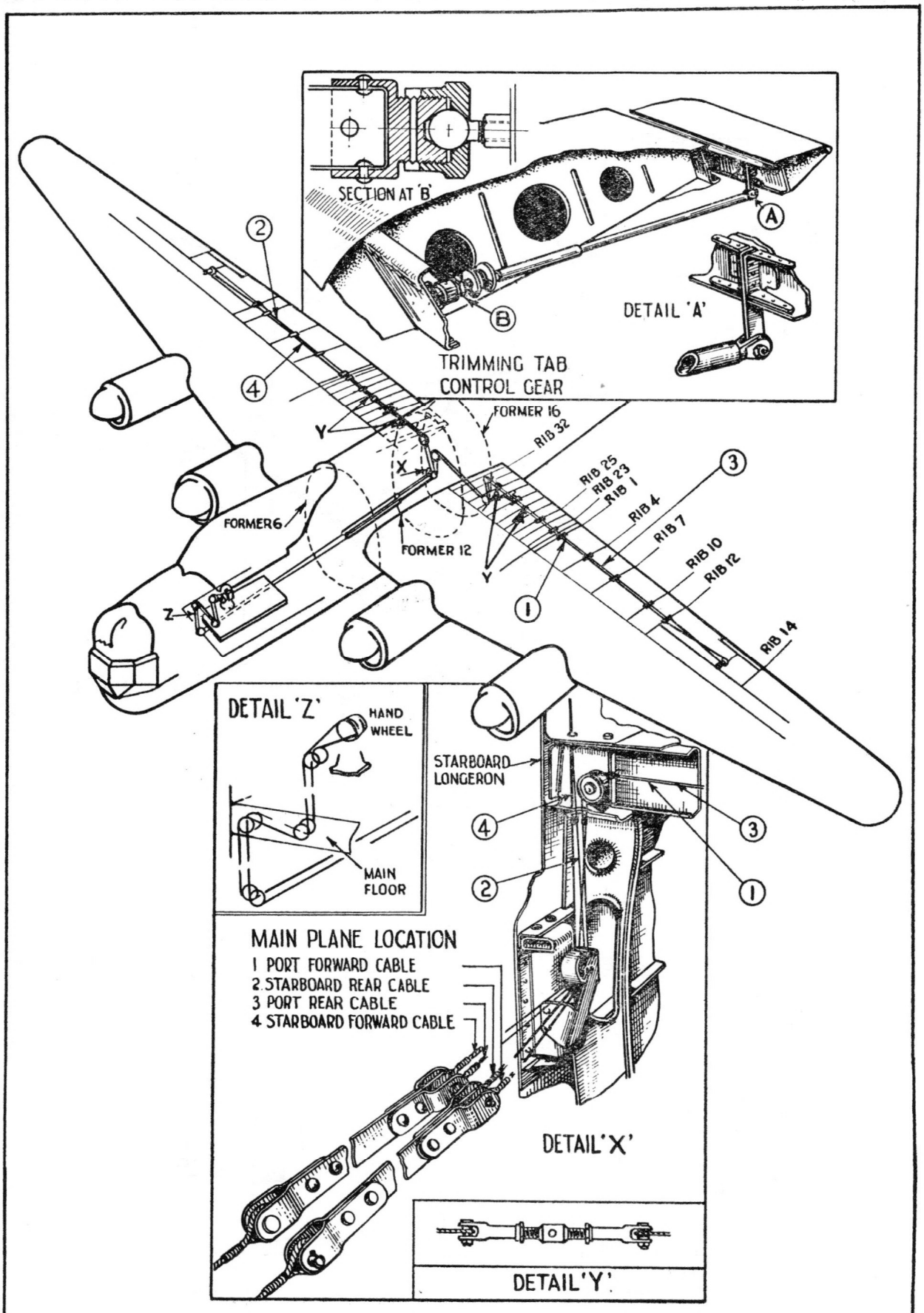

6	AILERON TRIMMING TAB CONTROLS	6

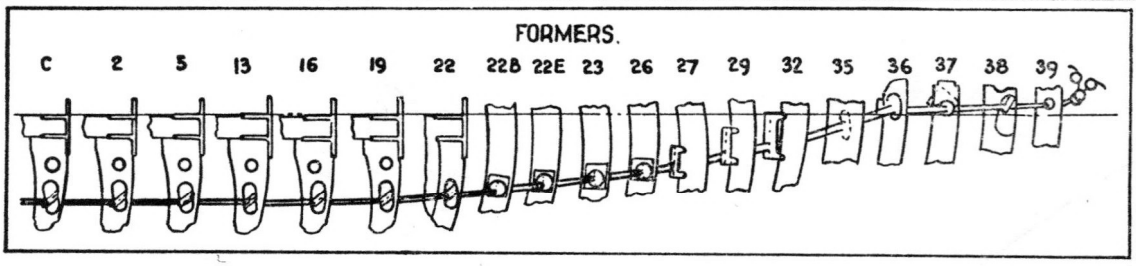

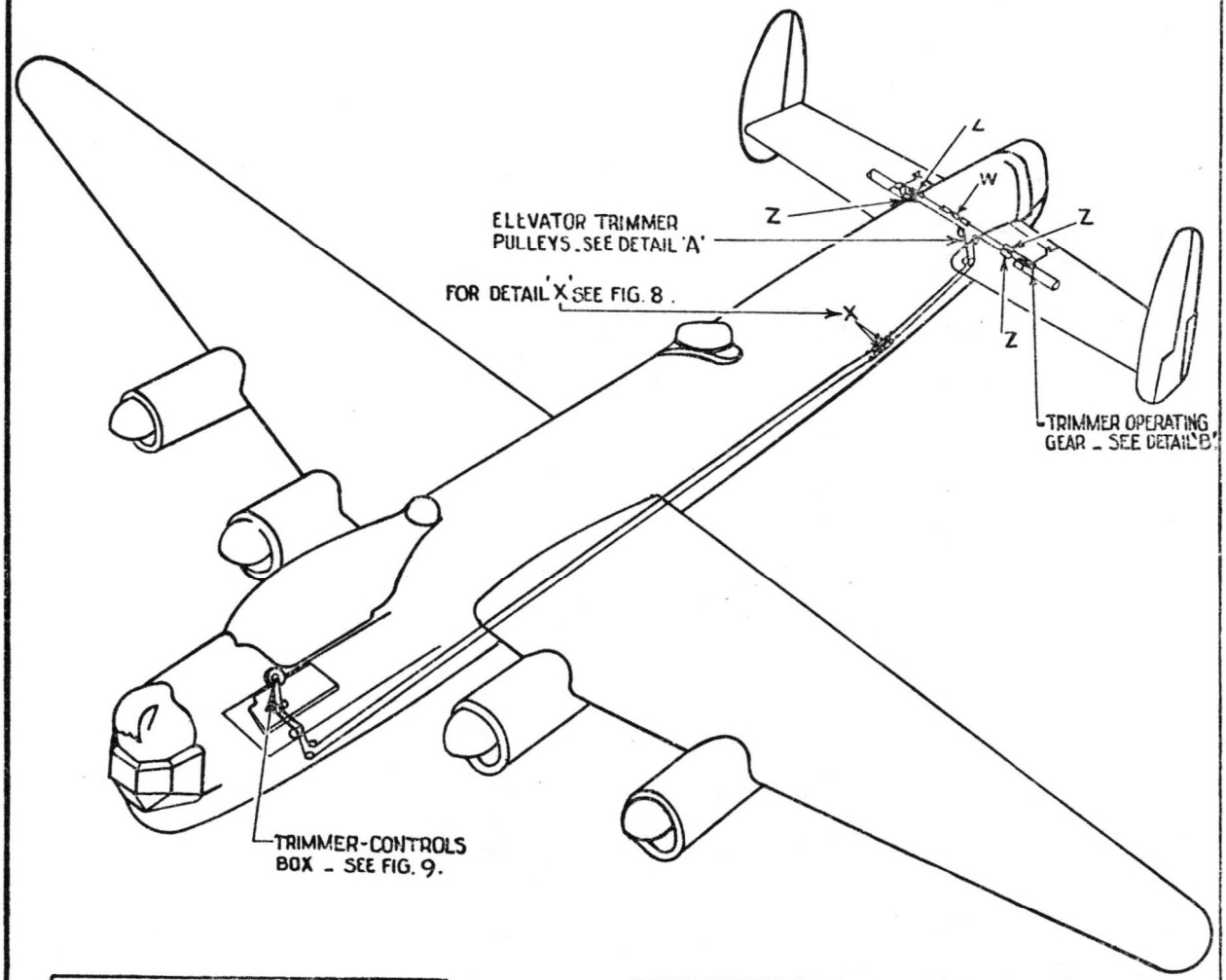

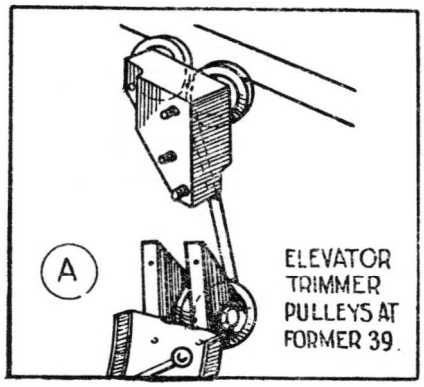

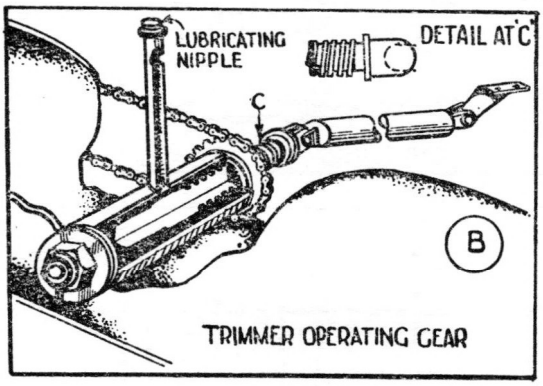

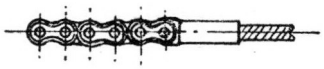

JOINT Z.



JOINT W.

7	ELEVATOR TRIMMING TAB CONTROLS	7

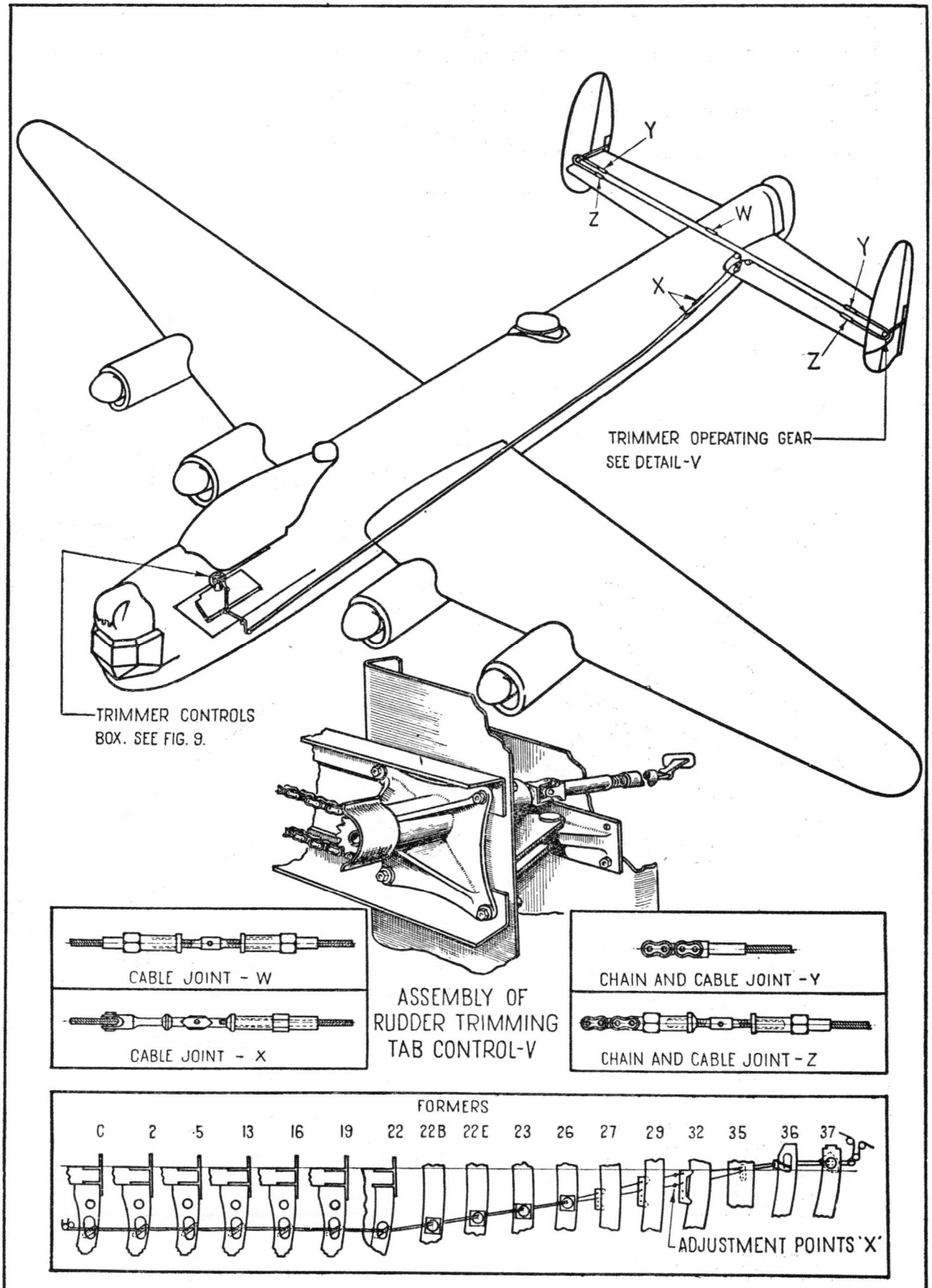
Y
Z
W
Y
X
Z
TRIMMER OPERATING GEAR
SEE DETAIL-V
TRIMMER CONTROLS
BOX. SEE FIG. 9.
CABLE JOINT - W
CABLE JOINT - X
ASSEMBLY OF
RUDDER TRIMMING
TAB CONTROL-V
CHAIN AND CABLE JOINT -Y
CHAIN AND CABLE JOINT - Z
FORMERS
C 2 5 13 16 19 22 22B 22E 23 26 27 29 32 35 36 37
ADJUSTMENT POINTS 'X'

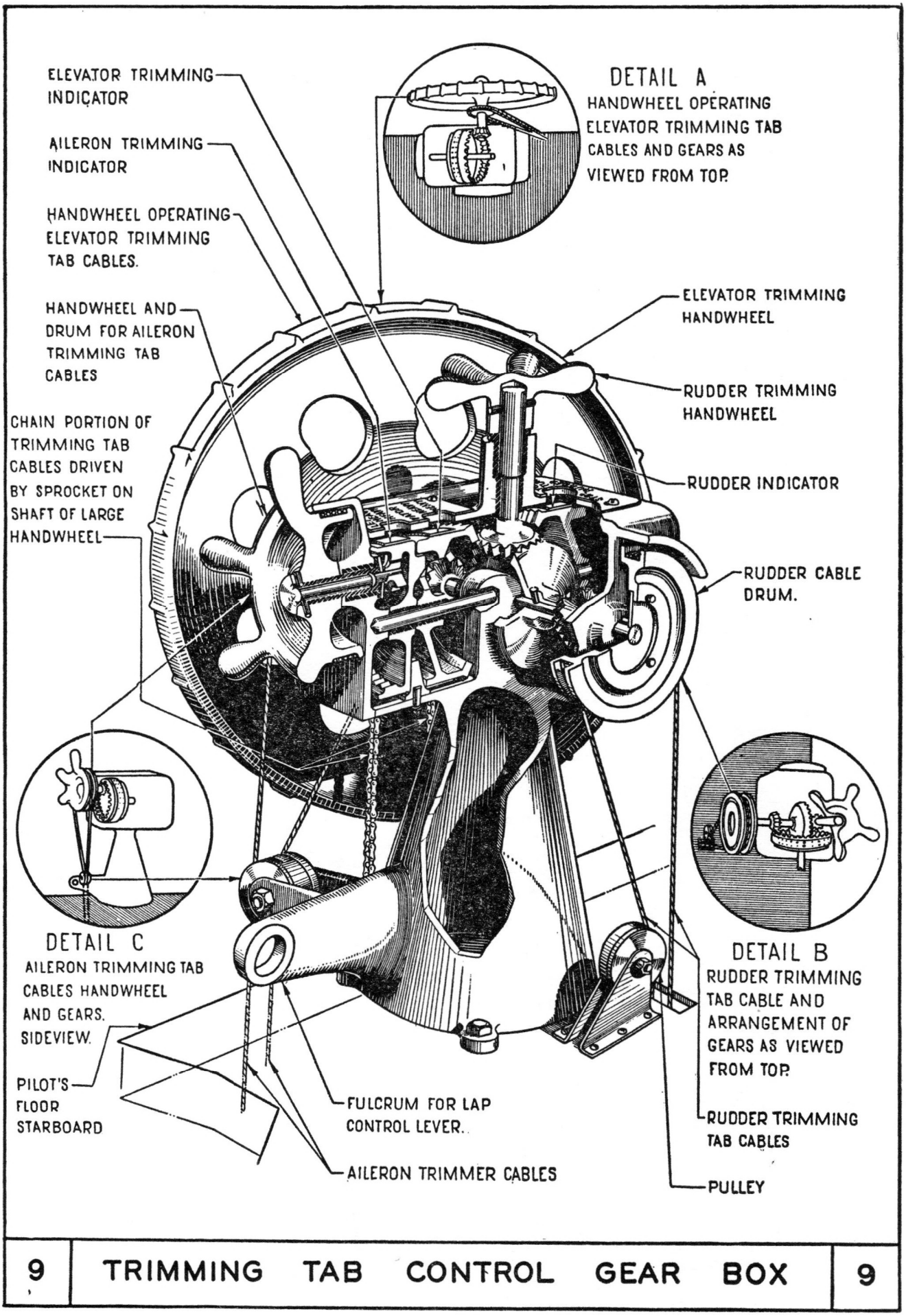

9	TRIMMING TAB CONTROL GEAR BOX	9

SECTION 7 — CHAPTER 5

Alighting Gear

CONTENTS

	Para.
MAIN WHEEL UNITS —	
General	1
Shock absorber struts	4
Retracting struts and latches	6
TAIL WHEEL UNIT —	
General	10
Shock absorber strut	11

ILLUSTRATIONS

	Fig.
Undercarriage	1
Tail wheel shimmy eliminator	2

Alighting Gear

MAIN WHEEL UNITS

1. The structural basis of each main wheel unit is left- and right-hand shock absorber strut, braced and aligned by an upper cross tube and diagonal tubing, with the wheel axle secured to the lower members of the struts. The upper end fitting of each strut is a light alloy forging, milled to pick up in the forked end of the undercarriage beam, attachment being made by a high tensile steel bolt through the undercarriage beam and through a steel bush in the strut top end fitting. At the lower end of each strut is a hard chrome-plated high tensile steel sliding tube. The bottom end of this tube enters the bore of the axle through U-shaped cut-outs, and the tube and axle are pinned together by steel bolts. Brake torque reaction is taken by large diameter light alloy brake flanges bolted to the axle.

2. Retraction is effected by the pull of a pair of hydraulic jacks. The piston rod of the jack is connected to the knuckle joint of a two-piece radius rod. The upper end of the radius rod pivots in a bracket bolted to the bottom boom of the centre plane rear spar; its lower end is attached by a steel pin joining the eye end of the radius rod to lugs milled in the light alloy forging which forms the radius rod attachment fitting at the base of the shock absorber strut outer cylinder. The knuckle joint of the radius rod incorporates locking mechanism which secures the unit in its UP or DOWN positions. The cylinder of the jack is hinged about a hollow shaft supported in split bearings on the top boom of the centre plane rear spar. Hydraulic fluid is supplied to the jack through this shaft. The lower ends of the jack piston rods are connected by a cross tube and diagonal bracing struts, bolt holes being drilled through the piston rods. A conduit stay connects the tops of each pair of jack cylinders and supports an emergency air non-return valve through which fluid (or air, in the event of emergency) is led to the jacks. An external balance pipe connects the two shock absorber struts, equalizing air pressure between them and ensuring synchronized action.

3. The initial movement of the jacks, when raising the unit, releases the DOWN latches of the knuckle joint. As the retracting movement continues, the knuckle joint breaks, and on completion of retraction the UP latch engages a cross-pin suspended from a channel section assembly attached to the ribs at the top of the compartment (Fig. 1), locking the unit in the retracted position. When either UP or DOWN latches are engaged, micro-switches close an electrical circuit and register the position of the unit on an indicator in the cockpit. Engagement of the UP latch also contacts the plunger of a micro-switch, which then makes electrical connection to the air cleaner. An access door is provided in the top skin of the centre plane directly above the UP catch mounting. (See also Section 10, Chapter 1, paragraphs 18, 19 and 32.)

Shock Absorber Struts

4. The oleo-pneumatic struts (see Section 4, Chapter 3, Fig. 26) absorb the shock and load of landing or taxying by further compressing air already under pressure in the struts. The outer cylinder (3) of the strut is secured to the aircraft through a light alloy forging (14); the lower sliding tube (8), to which the wheel axle is attached, slides inside the outer cylinder. Shock absorption is effected by a dashpot assembly consisting of an internal cylinder (16) containing compressed air, and a lower cylinder (26) containing a measured quantity of oil. The top end of the cylinder (16) is attached to the outer cylinder (3) and top end fitting (14) by means of shear-bushes or ferrules (13); the inner or lower sliding tube (8) is attached to the lower dashpot cylinder, the attachment being allowed an appreciable degree of flexibility, so that bending loads are not transmitted to the dashpot assembly. When any load forces the axle, and with it the lower sliding tube (8), upward, the lower dashpot cylinder slides over the top internal cylinder (16); fluid is forced through the damping valve (22) and enters the cylinder (16), further compressing the air. The piston (20), with synthetic rubber ring (21), is simultaneously driven up inside the internal cylinder

(16) by the piston rod (23). A synthetic rubber gland sealing ring (19) forms a fluid-tight joint between the top internal and lower cylinders.

5. When the load is reduced or relieved the initial downward movement causes the damping valve (22) to seat, so that the passage of fluid expelled from the cylinder (16) is restricted, being confined to a series of small holes in the damping valve (22). As the piston (20) moves with the lower dashpot cylinder, it must pass through the column of fluid in the top internal cylinder. This fluid can escape in two directions—through the damping valve and through two small holes in the piston, thus controlling the speed of recoil of the strut. The flanged shoulders of the cylinder (26) connected to the sliding tube (8) abut on rubber rings (24) at the end of its downward travel, the cylinder and sliding tube being retained in the outer cylinder by these rubber rings, supported by a cylindrical distance piece (25) which makes end contact with internal ring (27) abutting on the upper end of a sleeve which forms a bearing for the sliding tube (8), which sleeve is itself retained by steel collar (33), screwed to the end of the outer cylinder (3). The balance pipe (12) connects the two oleo struts through a union (2), for which the strut top end fitting (14) and outer cylinder (3) are drilled and the cylinder (16) drilled and tapped. Split bearings (5) are secured, by countersunk screws, to the strut bracing fitting, to which the diagonal bracing tubes are attached. These bearings are embraced by a light alloy collar pivoted to the connecting tube which operates the undercarriage doors.

Retracting Struts (Radius Rods) and Latches

6. Each main wheel unit has a retracting strut (or radius rod) at each side. The arrangement of the knuckle joint and latch assembly is shown in Fig. 1 and in Section 4, Chapter 3, Fig. 25. The UP latch (5) and DOWN latches (3) pivot on a pin (9) in the lugs (7) to which the jack piston rod is attached, both latches having elongated holes through which passes the jack rod attachment pin (8). The UP latch (5) engages a locking pin on the airframe (see paragraph 3), and the DOWN latches (3) engage a pin (2) carried on lever (15) attached to shaft (14) pivoted in the upper section of the strut. The lever (15) is attached also to the lower section of the strut by adjustable tie-rods (1), and two levers (13) are secured on either side of the shaft (14) so that they move in unison with the lever (15) as the strut folds. Each lever (13) is connected to a spring plunger (12) in a spring assembly, of which the housings (11) are joined by a pin (6) passing through elongated holes in the two latches. A retaining plate (10), secured to the face of lever (15), when butted against the surface of the inner hinge fitting below lugs (7), ensures that the upper and lower strut sections are truly in line when the DOWN latches (3) engage.

7. The initial stage of retraction movement by the jack piston rod pulls the DOWN latches (3) off pin (2) until the limit of the slots is reached; further movement results in breaking the strut and raising the unit. Lever (15) and pin (2) are simultaneously pulled around in an arc, away from the latches, by the tie rods (1). The UP latch can now drop back on to pin (6), which is moving towards the end of the slots in the DOWN latches against the action of levers (13). With the pin (6) at the end of the slots, the levers then force plungers (12) to compress springs (16). Just before the end of the retraction operation, the UP latch (5) makes contact with the locking pin on the aircraft structure (see paragraph 3), pressing the latch back to further compress springs (16). As the retracting movement is completed, these springs force the catch over the pin to lock the unit in the UP position.

8. When the unit is lowered, the initial movement of the piston rod disengages the UP latch (5) from its locking pin. When the latch is clear the unit drops by gravity, the continued extension of the piston rod then completing the straightening of the retracting struts. During this operation, lever (15) and pin (2) describe an arc towards the latches, and the consequent movement of levers (13) withdraws plungers (12) from spring housings (11), relieving the springs (16). The pin (6) is then drawn to the ends of the slots in the latches and the latches pulled forward until restrained by bolt (9). In the final stages of lowering, pin (2) strikes

the curved heads of the DOWN latches (3) and these are forced back against the springs (17) in housings (11). As the movement approaches its end the springs (17) pull the latches (3) over the pin (2), locking the unit.

9. The last phases of movement of the UP and DOWN latches operate micro-switches which are wired to an undercarriage position indicator in the cockpit (see paragraph 3).

TAIL WHEEL UNIT

10. The tail wheel unit is pivoted on a mounting beam installed longitudinally on the centre line of the aircraft between formers 35 and 38. The upper end of the shock-absorber unit is spigoted for location by an anchorage plate behind the forward attachment bracket for the two halves of the tail plane. The wheel fork is fitted in the lower, or sliding, tube of the shock absorber (see Section 4, Chapter 3, Fig. 27). A shimmy eliminator is fitted to the tail wheel unit on later aircraft (see Fig. 2). The axle is mounted in U-section cut-outs in the base of the fork, and is prevented from turning by two blocks with transverse bolts. The fork is extended to form towage or steering lugs.

Shock Absorber Strut

11. The assembly (Section 4, Chapter 3, Fig. 27) comprises a main outer tube (23), lower sliding tube (29), air chamber (22), damping valve assembly and wheel fork (30). The air chamber (22) is secured in the top of the main outer tube (23) by means of an end cap (17) and pins (18) and (20). The damping valve assembly is fitted in the lower end of the air chamber (22); the sliding tube (29) moves up and down between the outer tube (23) and the air chamber (22). Attachment to the aircraft is by peg or spigot (16) (see paragraph 10) and sleeve, with attachment lug (28). The lower sliding tube is filled with fluid and has gland rings (5) and (12) to render it fluid-tight. Air chamber (22) is inflated through inflation valve (1).

12. Landing or taxying loads cause the sliding tube (29) to move upward over the air chamber, thus forcing fluid in the lower cylinder through the damping valve (10) and small holes in the diaphragm (27) and increasing the pressure in the air chamber (22). As soon as compression is arrested, the damping valve (10) closes so that fluid forced back into the sliding tube by the compressed air in the air chamber as the strut extends can pass only through the small holes in the diaphragm; this restriction on the return flow of fluid controls the recoil action.

13. The sliding tube and fork are free to rotate in the assembly, but to ensure that the fork and wheel assume a true fore-and-aft position when the aircraft is airborne, self-centreing cams (25) and (24) are secured to the air chamber (22) and sliding tube (29) respectively. When the strut is compressed, the cams are separated and the wheel has free castering action. When the strut is extended, as when airborne, the cams meet and the contours of their mating faces bring the sliding tube, with fork attached, into a position where the fork and wheel are correctly aligned fore-and-aft.

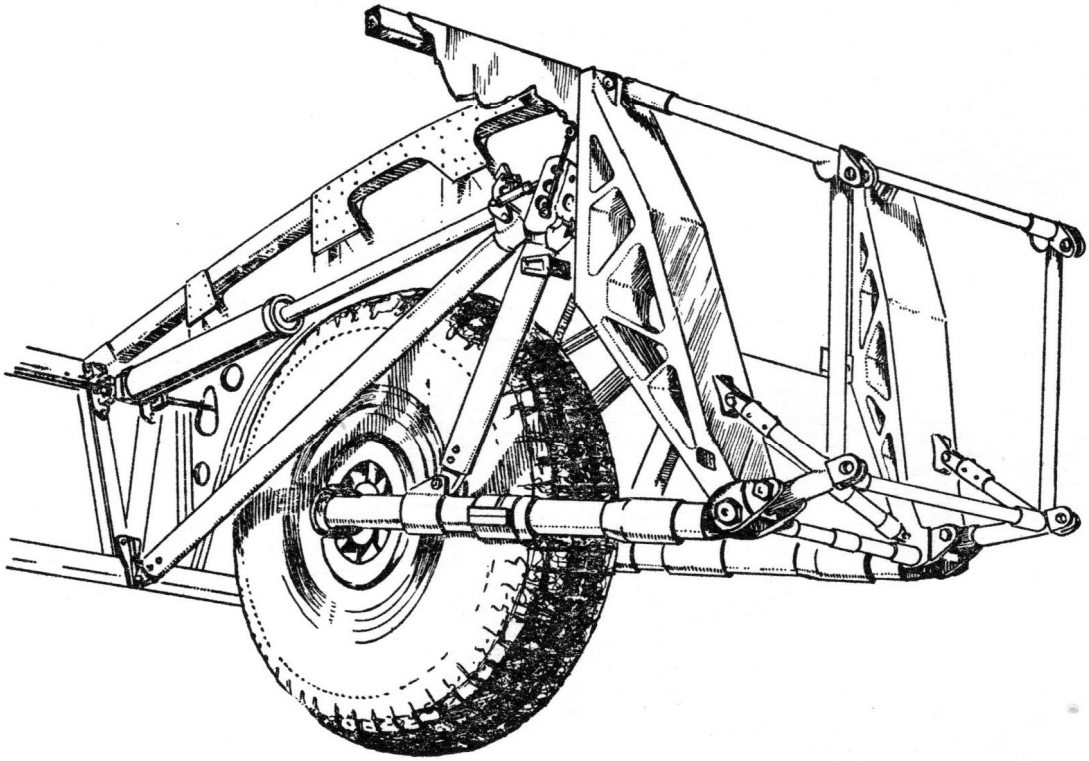

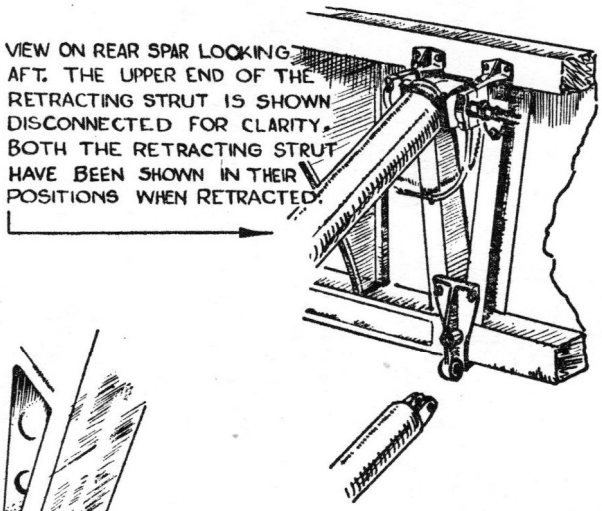

VIEW ON REAR SPAR LOOKING AFT. THE UPPER END OF THE RETRACTING STRUT IS SHOWN DISCONNECTED FOR CLARITY. BOTH THE RETRACTING STRUT HAVE BEEN SHOWN IN THEIR POSITIONS WHEN RETRACTED.

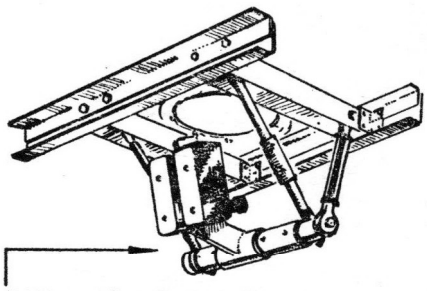

DETAIL OF UNDERCARRIAGE UP-CATCH AT PORT OUTBOARD POSITION. AIR CLEANER AND WARNING LAMPS MICRO-SWITCHES ARE FITTED AT THIS UP-CATCH. SITUATED DIRECTLY ABOVE IS AN INSPECTION DOOR.

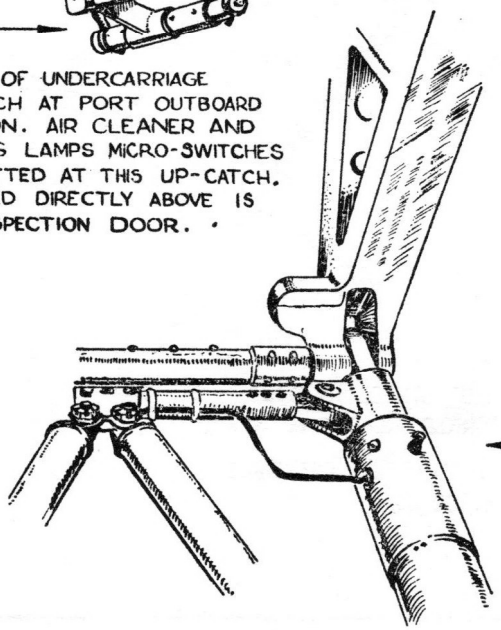

VIEW BEHIND FIREWALL, LOOKING ON ATTACHMENT POINTS OF SUPPORT BEAM AND UNDERCARRIAGE - SHOCK ABSORBER UNIT ATTACHMENT FOR PORT AND STARBOARD IS IDENTICAL

1	UNDERCARRIAGE	1

SHOCK-ABSORBER STRUT
INFLATION PRESSURE
650-700 LB/SQ. IN.

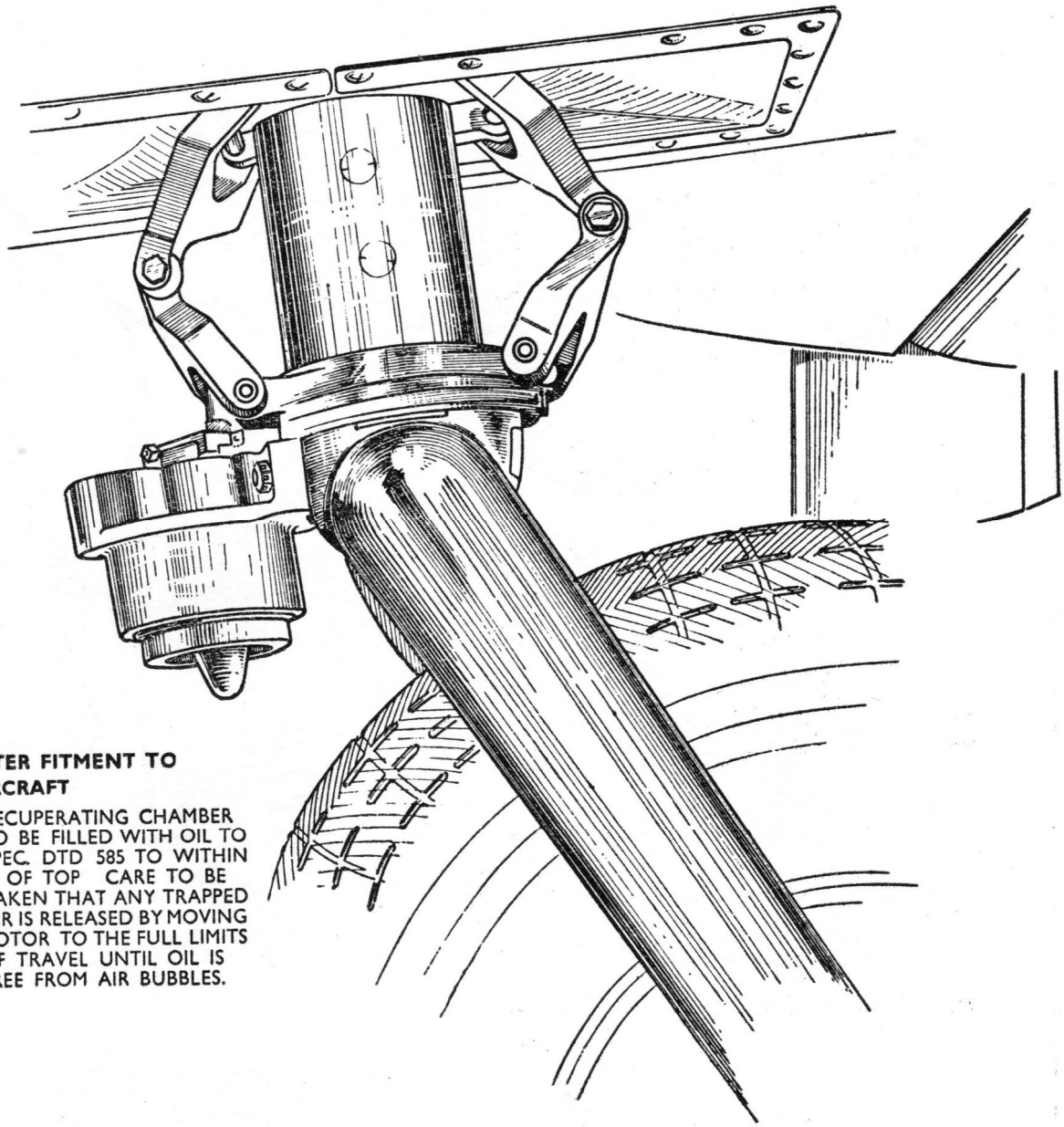

AFTER FITMENT TO AIRCRAFT

RECUPERATING CHAMBER TO BE FILLED WITH OIL TO SPEC. DTD 585 TO WITHIN $\frac{3}{8}$" OF TOP CARE TO BE TAKEN THAT ANY TRAPPED AIR IS RELEASED BY MOVING ROTOR TO THE FULL LIMITS OF TRAVEL UNTIL OIL IS FREE FROM AIR BUBBLES.

DUNLOP WHEEL AH 8403
PATTERNED TREAD TYRE 32 X 10

TYRE INFLATION PRESSURE
69 LB/SQ. IN.

Section 8

Engine Installation

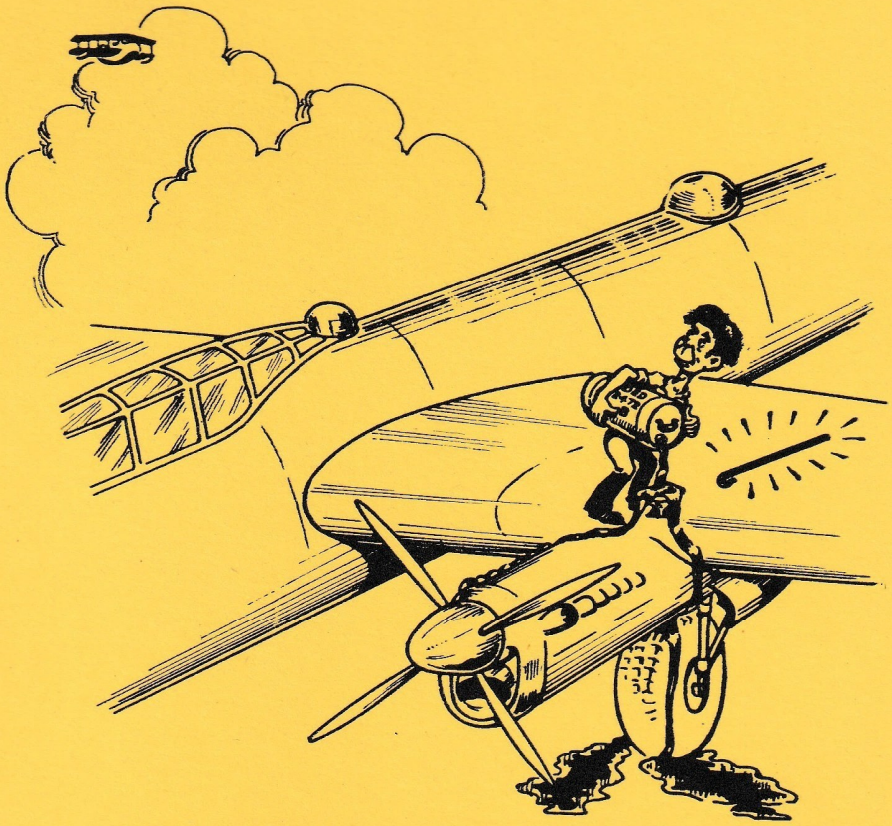

THE DIP STICK, EGBERT, WHICH IS STOWED INSIDE THE FILLER NECK, MUST BE USED WHEN REPLENISHING THE OIL SUPPLY, AS THE POSITION OF THE FILLER MAKES IT POSSIBLE TO FILL THE TANK COMPLETELY, LEAVING NO AIR SPACE.

SECTION 8

Engine Installation

CONTENTS

	Para.
INTRODUCTION	1
FUEL SYSTEM —	
General	2
Pipe system	5
Nitrogen system	9
Priming system	11
Fuel cocks	12
Fuel tanks	13
Pulsometer pumps	18
Boost gauges	19
OIL SYSTEM —	
General	20
Oil tanks	22
Oil filter	26
ENGINE CONTROLS —	
General	27
Boost control cut-out (inoperative Merlin 85 engines)	30
Fuel cock controls	31
Supercharger control	32
Slow-running cut-out	33
Air cleaner	34
Hot and cold air intakes	35
Radiator shutters	36
COOLING SYSTEM	37
ENGINE NACELLE COWLING AND FAIRINGS	39
Engine cowling forward of cowling ring	40
Engine cowling aft of cowling ring — inboard	41
Engine cowling aft of cowling ring — outboard	42
Undercarriage doors and valances ...	43
Nacelle trailing edge fairings	44
UNDERCARRIAGE SUPPORT BEAMS ...	45
ENGINE SUB-FRAMES	46
FIREWALL	47
ARMOUR PLATING	48

ILLUSTRATIONS

	Fig.
Engine and secondary controls — fuselage	1
Engine controls — cockpit (1)	2
Engine controls — cockpit (2)	3
Engine controls — fuselage (1)	4
Engine controls — fuselage (2)	5
Engine controls — fuselage (3)	6
Engine and secondary controls — main plane	7
Fuel system	8
Induction priming system	9
Fuel distributor tank	10
Fuel tank No. 1	11
Oil system — inboard and outboard engine	12
Engine auxiliaries	13
Engine sub-frames	14

Engine Installation

Introduction

1. Lincoln Mk. 30 Aircraft are fitted with four power plants, incorporating Merlin 85 engines. This type of power plant embodies two-stage, two-speed superchargers, with intercoolers, and has de Havilland constant-speed feathering propellers. The mounting frame and firewall of each power plant is attached to a tubular steel sub-frame; the two inboard sub-frames connect to the under-carriage support beams on the front spar and the outboard sub-frames connect to the main plane spars. Cowlings and fairings are a combination of hinged and quickly detachable panels, giving easy access to engine controls and auxiliaries. Fuel supply is from six tanks mounted between the main plane spars. Each engine has one oil tank, the inboard tanks being located behind the centre section front spar and the outboard tanks fitted inside the sub-frame members.

FUEL SYSTEM

General

2. The port and starboard fuel systems (see relevant illustrations in this section and in Section 4, Chapter 3) are interconnected by a cross-feed pipe, the cock for which is normally in the "closed" position, so that the two systems are basically independent. Fuel tanks are numbered 1, 2 and 3 outboard from the fuselage, port and starboard. The No. 1 tanks are between the spars of the centre section main plane, and Nos. 2 and 3 are in the intermediate plane, each tank feeding separately by gravity to a small distributor tank behind the inboard nacelle firewall (see Fig. 10). Fuel is drawn by the engine-driven pumps, or pumped by the electrically operated Pulsometer pumps at the base of each distributor tank, through individual supply lines and filters, to each engine, and delivered to the carburettor by the engine-driven pump. The Pulsometer pumps are used for priming, for maintenance of fuel pressure when above about 17,000 feet, and to assist in restarting engine during flight. An electric transfer pump is fitted in each auxiliary tank, when these are installed, to transfer fuel to tank No. 1.

3. The Bendix-Stromberg carburettor is of the pressure injection type, with vapour vent connection which returns any condensate to the fuel tank vent pipe common to the three fuel tanks on each side. This pipe does not vent directly to atmosphere, but a separate vent pipe, terminating in three branches, each fitted with a nitrogen valve, provides an external introduction of nitrogen to replace fuel as it is withdrawn. A priming pump in each inboard nacelle is connected to the two engines on the same side. Electrical fuel contents gauges, boost gauges, fuel pressure warning lamps and switches for the Pulsometer pumps are provided in the cockpit. A drain valve assembly for the whole system is mounted on the front spar in the port inboard nacelle (see Section 4, Chapter 3). Fuel consumption by each engine is recorded by flowmeter on the flight engineer's panel. (For details of the fuel system forward of the firewall, see A.P.2861A and A.P.1590P, S and U, Vol. I.)

4. Provision is made for the fitting of long range auxiliary tanks, when required. Either one or two tanks, each of 400 gallons capacity, can be slung in the bomb cell (see relevant illustrations in Section 4, Chapter 3), connecting to a T-piece and to Flexatex pipes already installed in the standard aircraft, so that either of, or both of, the No. 1 tanks can be refuelled from the auxiliary tanks. For this purpose, two control cocks are fitted as standard behind the front spar.

Pipe System

5. The pipes in the system, with the following exceptions, are of Flexatex hose:—

(a) Vent connections between fuel tanks; vent pipes to atmosphere from the No. 3 tanks; No. 1 tank filler drains; lower sections of No. 2 and No. 3 tank filler drains—all these are light alloy.

(b) Priming pipes and boost pipes are of copper to the firewall, but forward of the firewall the connection is by flexible, metal-braided Superflexit tubing.

(c) Vent pipe is connected to elbow on No. 2 tank by a 16½ in. length of P.R. hose.

6. The delivery pipes run from the outboard bottom rear corner of each No. 1 tank, and from the inboard rear corner of each of the four outboard tanks, into the inboard and outboard valances respectively of the main wheel compartment (see Fig. 8), and thence forward in the valance walls to the distributor tank (see Fig. 10). A manually operated stop-cock for ground servicing is provided in these pipe lines in the valances, with access through detachable doors which cannot be replaced while the cock is in the "off" position.

7. The inboard engine delivery pipe from the distributor tank passes forward to an A.G.S. type filter mounted on the forward face of the firewall. Delivery to the outboard engine is by pipe from the distributor to front spar and outboard along that spar behind the leading edge to a filter mounted on the outboard engine firewall.

8. The vent pipes connecting the tanks lie between the spars, inclining downwards towards the No. 1 tanks. Any liquid fuel returned through the vapour vent pipes of the outboard engines will flow to the No. 2 tanks, and from the inboard engines to the No. 1 tanks. The distributor tanks are included in the vapour vent circuit by a pipe from the upper union on the distributor tank to the common vent pipe. The nitrogen system is connected to the vent pipes on each side.

Nitrogen System

9. This system provides for the introduction of nitrogen into the fuel tanks, replacing the fuel as used, and minimizing the fire risk. The nitrogen is stored at 1800 lbs./sq. in. in bottles similar to those used for oxygen. Seven bottles are mounted vertically on the forward face of the rear spar in the fuselage, and four on the port wall, and six on the starboard wall of the centre section. Above the starboard bottles is the control valve and a pressure gauge. Nitrogen is led at high pressure through brass tubing to a filter and then to a Palmer reducing valve on the outboard rib of each inboard nacelle, to bring the pressure down to 15/25 lbs./sq. in. Pressure is further reduced to 0.25 lbs./sq. in. by an adjacent Amal valve, and the gas is then introduced to the vent pipes of the six fuel tanks through light alloy and Flexatex tubing. To prevent ingress of air to the fuel tanks—unless the nitrogen supply fails to compensate for the volume of fuel used—and to prevent loss of nitrogen, a pressure control valve operating in both directions at 0.25 lbs./sq. in. is fitted in each of the three vent outlets of No. 3 tanks. Nitrogen is turned on whilst the engines are running, and as the tank fuel level decreases during flight, any remaining air is diluted with nitrogen beyond the point at which the proportion of oxygen still present is sufficient to support combustion. After refuelling, nitrogen can be turned on for a few minutes, with the tank filler caps slackened, to allow residual air above the level of the fuel to be diluted with nitrogen as far as possible.

10. The charging point in the starboard bomb door valance of the fuselage centre section is fitted with a special extension differing from that used for oxygen system charging, to prevent any possibility of confusion when charging oxygen and nitrogen systems.

Priming System

11. A priming switch, motor switch and warning lamp on the pilot's panel connect with solenoid operated priming valves in each inboard nacelle and to the adjacent motor driven pump (Fig. 9). This pump draws fuel from the distributor tank through a flexible pipe and delivers through copper pipe to the doper or priming connections on the firewall of each engine, from which flexible metallic braided pipes run to the induction unions. Fuel is drawn from the fuel distributor tank and pumped to either inboard or outboard engine, a separate cock being provided between the pump and each engine. A three-way selector cock, for use when priming with high volatility fuel, is fitted in the pipe line between the distributor tank and the pump.

Fuel Cocks

12. Four separate levers at the base of the pilot's instrument panel control the fuel cocks

(Fig. 1). In each of the connections on the distributor tanks for fuel delivery to the engines is a rotary valve (Fig. 10), with external lever and Teleflex control, which in turn is moved by chains and tie rods linked to the pilot's fuel cock control levers. It should be noted that whilst the inboard delivery pipe of the starboard distributor tank feeds the inboard engine, the inboard delivery pipe of the port distributor tank is connected across the spar to the outboard engine. Six stop cocks (for servicing only) are provided in the inboard nacelles (see paragraph 6) for isolation of tanks, one drain cock on the port inboard nacelle, one cock for the cross-feed line forward of the front spar and two cocks for use when fuselage auxiliary tanks are fitted.

Fuel Tanks

13. Both No. 1 tanks are of light alloy sheet, seam welded, with top-hat section stringers spot welded to the shell and baffles bolted to the stringers (Fig. 11). Self-sealing protective covering is cemented over the surface of the shell, clamped by flanged rings at the edges of areas cut out to accommodate filler cap, vent elbow, inspection doors and similar fittings. Access doors are covered by doped-on rip patches. The filler cap is located in a well or drip tray from which a drain tube passes aft. In the base of the tank is a large jettison valve, with which is incorporated an extensible rubber pipe. This valve is operated hydraulically from a lever on the pilot's floor. An access door, to enable this valve to be serviced without removal of the tank, is provided. Tank capacity, 580 gallons.

14. No. 2 and No. 3 tanks are of flexible construction, reinforced by internal partitions and with removable straps which fold down on top of the tanks. A filler cap with splash tray, a drain pipe lying in the groove across tank and three manhole covers are located on the upper surface of each No. 2 tank. Capacity of No. 2 tank is 545 gallons (see A.P.1464D, Vol. I). No. 3 tanks follow the same general construction, but also include nitrogen vent elbow at the forward outboard corner. Each of these tanks is of 300 gallons capacity. The cork float valve in No. 3 tank for fuel level indication is metal lined.

15. All tanks are provided with drain sump in base, vent connection and electrical connection for fuel gauge transmitter connected to its appropriate gauge on the pilot's panel. A special vapour separator is fitted in the elbow at the bottom of the auxiliary tanks.

16. No. 1 tank is cradled in shaped bearer ribs between the spars, at the root end of the main plane. It abuts against the upper contour of these ribs and is retained by five steel suspension straps tensioned by turnbuckles, wire-locked after fitting. Below the tank is a large access door covering the full bottom area of the tank bay.

17. The flexible No. 2 and No. 3 tanks are a close fit in compartments in the main plane, these compartments being formed by shaped ribs covered by light alloy plating, pop riveted to ribs in bays between the spars. Tanks are lowered into place by means of straps provided and, after all connections have been made, the access door for the outlet pipe connection below the main plane and the tank assembly panel in the upper surface are secured.

Pulsometer Pumps

18. The four Pulsometer pumps are located in pairs at the base of the fuel distributor tanks (Fig. 10) and controlled by independent switches on the flight engineer's panel, on which panel are also grouped the fuel pressure indicators, fuel pump test switches and tank contents gauges. Each Pulsometer pump has its own filter.

Boost Gauges

19. The four boost gauges on the pilot's instrument panel are connected to the engines by copper pipes, which run down the starboard wall and pass through the forward bulkhead (former E) and then below the floor on the starboard side to the front spar, to continue to their respective unions on the firewalls, from which point final connection is made by Superflexit pipe.

OIL SYSTEM

General

20. Each engine has its own oil system, provided by a separate tank in each nacelle (Fig. 12). The inboard tank is mounted behind the front spar and the outboard tank

between the sub-frame tubing. The main feed pipe from each tank connects at the filter union in the base of the tank, passes through the firewall and then forward to the engine oil pump. Return flow is through the cooler, on the starboard side of the coolant radiators below the front of the engine, to the top of the partial circulation compartment in the oil tank. A vent pipe runs to the top of the tank from a connection on the starboard side of the engine. The propeller feathering motor is mounted at the base of the sub-frame and is fed from the base of the oil tank; a flexible pipe from the pump outlet leads to a union forward of the firewall and thence to the operating unit at the forward end of the engine. Pipes are of copper, with flexible couplings, and supported by bolted split rings where they pass through the firewall.

21. Oil temperature gauges are mounted on the flight engineer's panel, but the oil pressure gauges are on the pilot's instrument board.

Oil Tanks

22. Inboard and outboard tanks are of the same capacity, although different in shape. Each contains 37½ gallons of oil and space for 4½ gallons air. Two gallons of oil for the hydromatic propeller feathering unit are included in that 37½ gallons. Tanks are of light alloy sheet, with welded joints. The partial circulation compartment is a circular member of two gallons capacity extending the full depth of the tank, the top portion opening out to form a de-aerating ramp and diffuser ring. Oil returning from the cooler passes through a nozzle into this ring and is dispersed over the ramp as it flows into the compartment. The circular member and ramp are welded as one unit, but the bottom of the compartment is formed by a separate ring into which the upper portion fits and which leaves an annular space. The upper edge of this ring governs the hydromatic oil level, below which oil cannot enter the filter. The two lower sections are riveted together, but with distance pieces to maintain the annular space. Bottom ring and oil filter are attached to the tank shell by studs.

23. The oil filler screwed cap of the inboard tank is reached through a door in the main plane upper surface immediately aft of the leading edge. The dip stick stowed inside the filler neck must be used when filling this tank, as the vertical position of the filler makes it possible to fill the tank completely, leaving no air space. The drain plug and filter in the base of the tank are accessible from below, in the undercarriage compartment; the filter element can be withdrawn completely. On the inboard side of the starboard tank and on the outboard side of the port tank is an inspection door, also an inspection cover located above the vent compartment of each tank. The outboard oil tank has filler neck and screw cap projecting outboard, inspection door on inboard side and inspection cover above vent space. Dip stick is clipped inside filler neck. In the tail down position the oil level corresponds to the bottom edge of the filler opening. Bottom surface connections are similar to those on the inboard tank: filter assembly, drain cock and plug and union for feathering motor pump pipe.

24. The covering of oil tanks is of felt and rubberised fabric, and is built up to $^{11}/_{32}$ in. thick for the area surrounding the clamping rings, normal thickness of covering being $^{3}/_{16}$ in.

25. The inboard tank is installed by two steel straps, the upper section looped to a cross tube at the upper rear of the tank and the lower section bolted to the bottom boom of the front spar and tensioned by turnbuckles at the rear of the tank. The tank is thus held firmly, with its upper shoulders located against the contour of the engine intermediate ribs. The outboard tank is cradled on two steel straps extending fore and aft between two cross members of the subframe tubing and partially supported by the foremost of these two tubes. From the same cross members, two steel straps run up and over the tank, the tensioning turnbuckles being on the top surface.

Oil Filter

26. The filter projects below the bottom of each tank, but the inlet ports are above the level of the tank bottom and are surrounded by a baffle ring below which the oil must pass. The body is a light alloy casting,

to the lower end of which the cleaning element is secured by means of a hand screw in a special nut fitting. Two arms in this nut engage in a groove in the base of the body and are then turned through 90°. The hand screw is then tightened and both hand screw and nut arms locked with wire. When the element is withdrawn for cleaning, a spring-loaded piston, previously held by prongs on the element, is forced down to seal off the inlet ports.

ENGINE CONTROLS

General

27. Pilot's throttle and propeller control levers are grouped in positional sequence in gated quadrants on the central control pedestal, with the boost control cut-out lever and the four master fuel cock levers arranged at each side on an extension of that pedestal below the pilot's instrument panel (Fig. 1). Port fuel cock levers are at the left side and starboard fuel cock levers at the right. The boost control cut-out lever is at the extreme left; this lever is inoperative and is locked on Lincoln Mk. 30 aircraft. Throttle and propeller speed control levers have hand-operated knobs to tighten friction discs and retain them in any selected position.

28. Control movement is transmitted by a system of tie rods, linked by chains, passing down the control pedestal to countershafts at the front end of the fuselage floor (Fig. 2), then by similar combination of rods and chains to and through sprocket boxes mounted on the front spar, thence outboard to the engines (Fig. 1). The control tie rods run aft from the forward countershafts through fairleads below the main floor to connect with chains on the sprockets of a countershaft under the rear of the fuselage front centre section (Figs. 5 and 6), from the duplicate sprockets of which assembly vertical chains and tie rods convey the motion through two sets of sprocket boxes on the front spar; inner and outer boxes for throttle and propeller controls and similar boxes for fuel cock controls (Fig. 4). Tie rods travel outward in each direction, supported by fairleads, to control boxes on the front spar in each nacelle (Fig. 7); outboard engine and propeller control rods are linked by chains which pass over sprockets on a lay shaft on the undercarriage support beam, the outer lengths of rod continuing through fairleads mounted on the ribs of the main plane leading edge and then to chains in the control box on the spar in the outboard nacelle. The levers on the upper shaft of this box are connected by rods with ball and socket joints to the relative levers on a countershaft fitted at the forward face of the firewall, the angular motion of the levers of that countershaft being translated into lateral movement by rods connecting to the engine. A cover shields the centre part of the countershaft assembly. (*See* also relevant illustrations in Section 4, Chapter 3.)

29. Two cam and lever operated switches are incorporated in the linkage of the inboard engine throttle connections in the control pedestal (Fig. 3). The switches make contact when the throttles are closed to less than their one-quarter open position, completing an electrical circuit which causes a warning horn to sound unless the main wheels are locked in their "down" position.

Boost Control Cut-out

30. This control is not connected on Lincoln Mk. 30 aircraft (fitted with Merlin 85 engines).

Fuel Cock Controls

31. The fuel cock controls are similar in type and layout to those for the throttle and propeller controls, using chains and tie rods linked up through port and starboard sprocket boxes on the fuselage front spar (Fig. 4). From these two boxes, tie rods continue outward through fairleads on the front spar to connect with chains at a sprocket bracket assembly (Fig. 7) between the inboard engine and the fuselage wall. The chains partially rotate upper and lower sprockets with integral arms which, in turn, make final contact with the levers controlling the rotary valves at the base of the fuel distributor box by means of Teleflex controls.

Supercharger Control

32. The two-speed, two-stage, liquid-cooled supercharger is controlled through an electro-pneumatic ram, operated by an altitude switch mounted just forward of the flight engineer's panel. A warning lamp on the

pilot's instrument panel should light up when the supercharger control is at F.S. A two-position selector switch is mounted adjacent to the warning lamp. For details of pneumatic system, *see* Section 9, and for data on electrical routing chart and circuit *see* Sections 6 and 10 respectively.

Slow Running Cut-out

33. The slow running cut-out for each engine is operated by pneumatic ram, controlled by separate switches on the upper right-hand side of the pilot's panel. For details of pneumatic system *see* Section 9, and for data on electrical routing chart and circuit *see* Sections 6 and 10 respectively.

Air Cleaner

34. An air cleaner on each engine normally comes into operation when the undercarriage is down, but can be made operative in flight by electric control of the spring-return pneumatic ram. A switch for this purpose is provided on the pilot's panel. (*See* Sections 6, 9 and 10 for descriptive details of pneumatic and electrical systems.)

Hot and Cold Air Intakes

35. The shutters governing the hot and cold air intakes for each engine are operated by pneumatic ram electrically controlled from a switch on the pilot's instrument panel. This switch, and airframe wiring, is fitted whether or not the intake shutters and ram are installed on the power plant. (For the pneumatic layout see Section 9, and for electrical circuit see Sections 6 and 10.)

Radiator Shutters

36. These are governed by thermostat and controlled by electro-pneumatic rams. By use of the switches on the flight engineer's panel, the control can be overridden to open the shutters (e.g., for taxying).

COOLING SYSTEM

37. Coolant for each engine is circulated through a header tank mounted behind the front cowling diaphragm and a secondary surface radiator suspended below the forward end of the engine mounting. The supercharger has an inter-cooler the radiator of which is curved to harmonise with the semi-circular contour of the radiator group, fitting between the oil cooler and the main radiator. Pressure in the system is controlled by a thermostatic relief valve in the header tank. Air flow through the radiator is regulated by thermostatically controlled shutters with electro-pneumatic ram. (For details of the pneumatic system see Section 9, and for electrical data see Sections 6 and 10.)

38. The inboard engine cooling systems are of greater capacity than those of the outboard engines, to cater for the cabin heating system. The radiator connected to the port inboard heating supply is on the starboard side of the fuselage, aft of the rear spar, while the cockpit is supplied with warm air from a radiator in the leading edge of the starboard main plane, fed from the starboard inboard engine. The flow pipe to each cabin heater radiator is taken from an outlet at the top of the engine, and the return is by connection to the return pipe of the main radiators. Pipes are coupled by flexible connections, and pass through the sub-frames and the leading edge of the main plane to the heater radiators. Piping from the port engine then continues across the fuselage to the starboard side and then below the fuselage floor to link up with the radiator mounted on the starboard wall. Stop cocks are fitted in the coolant pipe lines, forward of the front spar. Pet cocks are provided in the top of each radiator and at the highest point of the return pipe, with a drain plug in the base of each radiator.

ENGINE NACELLE COWLING AND FAIRINGS

39. The inboard engine nacelle comprises the engine cowling, cowlings extending fore and aft of the firewall, undercarriage doors and valances and two fairings below the trailing edge of the main plane. The outboard nacelle consists of the engine cowling, fairing panels enclosing the sub-frame and a rear section fairing below the main plane.

Engine Cowling Forward of Cowling Ring

40. Hinged duralumin top panels give access to the intercooler header tank filler; top front panels cover the main header tank filler; exhaust panels with louvres shield the

manifolds and flame dampers; air intake and radiator scoop are one assembly; contoured side panels are hinged and have retaining cables so that they can be used as servicing platforms, and an air cleaner fairing panel and bottom panel with radiator flap complete the cowling of the power plant. Dzus fasteners are used throughout. (For description of cowlings, radiator flaps, hot and cold air intakes, see A.P.2861A, Vol. I).

Engine Cowling Aft of Cowling Ring — Inboard

41. Four detachable panels of light alloy sheet enclose the engine sub-frame, and consist of top and bottom panels, two side panels and a hinged fairing between the top panel and the front spar. The detachable panels have stiffeners at their edges and intermediate stiffeners of top-hat section. The bottom panels extend from the engine cowling ring to the forward edge of the undercarriage doors, the side panels extend further aft to the forward edge of the undercarriage doors, the rearmost top panel is hinged to the front spar top boom and the top detachable panel is contoured to cover the remaining area, its rearmost edge overlapping the hinged panel, to which it is attached by Dzus fasteners. Both the upper panels are supported on the nacelle nose ribs, the hinged panel secured by clips on the sub-frame tubing by means of two Oddie fasteners fitted to brackets at the forward edge of this panel. Dzus fasteners are used for all other cowling attachments. On earlier Lincoln aircraft, the inboard side panel of the port inboard engine was provided with aperture and louvre for the auto-pilot oil cooler. The louvre has now been repositioned to the leading edge. The port outboard and starboard inboard side panels of inboard engines have louvres registering with ducts for air flow to the generators.

Engine Cowling Aft of Cowling Ring — Outboard

42. The sub-frame is enclosed by two top, one bottom and two side panels, secured by Dzus fasteners. The top rear panel is not hinged. An access door for the oil tank filler cap is located in the outboard side panel. Light alloy sheet, reinforced by angles at the edges and by top-hat section stiffeners, is used for the panels. A fairing rail for the upper panels is bolted between the nacelle nose ribs.

Undercarriage Doors and Valances

43. The valance is of channel section formers and stringers riveted to attachment channels at the top and to a channel section hinge beam at the bottom. The upper channel is mounted to the engine ribs by bolts and anchor nuts. The doors swing on piano hinges and are constructed with channel section hinge beams and lower edge members, with intercostals and stringers. Valance doors are plated with light alloy sheet. Door operation is mechanical, through a connecting rod attached at one end to a ball-bearing eyebolt at the lower edge of the door and to a collar on the oleo leg at the other end. The valance hinge beam is extended forward beyond the doors, fitted with two bolts to the undercarriage support beams and forming a cowling attachment rail.

Nacelle Trailing Edge Fairings

44. The inboard nacelle fairing for the underside of the trailing edge, in rear of the undercarriage doors, is divided into two sections. The front section is based on four light alloy frames, the foremost forming a bulkhead for the rear of the main undercarriage bay, and is plated with light alloy. Attachment is by its flanged edges to the underside of the main plane trailing edge, and by bolts through the forward frame to the valance channel. The rear section is of three channel section light alloy frames and four L-section stringers, over which light alloy plating is riveted. This section is bolted to the inner flap and moves through an arc, partially entering the forward section when the flap is lowered. Fairing of the outboard nacelles is completed by a fairing member made of light alloy sheet over seven light alloy formers. From the upper edges of this member are tapering, contoured fillets attached to the underside of the main plane by Dzus fasteners. The forward end is bolted, at the top of the former, to clips on the sub-frame tubing. (Armour plating is described in paragraph 48.)

UNDERCARRIAGE SUPPORT BEAMS

45. The inboard engine sub-frame and undercarriage unit are supported by a pair of beams with diagonal bracing. The beams are light alloy castings, with integral lugs for engine sub-frame attachment and for the diagonal tube. The lower end of each beam is milled to form a fork in which the top end fitting of the oleo leg pivots; the shouldered bolt on which the leg pivots also screws into a socket in the ends of a cross-strut tying the lower ends of the beams. These support beams are bolted to the front spar and to the engine ribs between the spars. On top of the beams are pads to allow engine changing gantry attachment sockets to be fitted.

ENGINE SUB-FRAMES

46. Both inboard and outboard sub-frames are of steel tubing with welded joints. The engine mounting frame picks up on four lugs extending forward from the sub-frame. The inboard sub-frame engages in lugs at both top and bottom of the undercarriage support beams, and also to inverted T-section brackets on the lower forward face of each beam (Figs. 7, 9 and 14). The gear box and engine auxiliaries (Fig. 13) are mounted on a panel clipped to the sub-frame tubing aft of the firewall, with the feathering motor pump installed below. The outboard sub-frame is mounted below the main plane and bolted at four points to reinforced steel channels on the front spar, tapering to a single fork and attachment to pick up on a mounting channel on the rear spar. Two detachable diagonal struts in the bottom plane of the outboard sub-frame allow for installation or removal of the oil tank.

FIREWALL

47. The circular firewall is of three plates, made either from 22g. mild steel or tinned steel, comprising a central vertical plate flanked by side plates, the vertical butting edges joined by top-hat section stiffeners riveted at their flanges to the adjacent plates. In addition, there are five lateral stiffeners of similar section, two across the starboard side panel, one at the lower portion of the port side panel and two on the central panel. Further reinforcement is given by the two extruded sections which form the mounting for the engine and propeller control lever assemblies. All these stiffeners and the extruded sections are on the forward face of the firewall. Attachment is by clips and bolts to the forward face of the sub-frame tubing. The inboard firewall has also a flanged plate bolted to the lower rear face and connecting to the sub-frame cross tube tying the lower ends of the undercarriage support beams. Sealing plates with asbestos packing are fitted at the points where the engine attachment fork ends pass through the firewall. Light alloy angles, carrying Dzus fastener springs for cowling attachment, are riveted to both front and rear edges of the firewall plates. At the lower forward face of the bottom plate is a small oil collector tank to which the engine drain manifold is connected.

ARMOUR PLATING

48. Armour plate guards at the base of the outboard sub-frame rear cross-member, and at the front of the rear nacelle fairing, protect the oil tank and oil filter. The forward armour plating is attached by clips and bolts to the tubing; the rear armour plating has top and bottom cross tubes with welded brackets, which are clipped to the tubular members of the sub-frame. All firewalls have a small area of armour plating on the aft face, immediately in rear of the fuel filter. This plating is attached direct by four 2 B.A. bolts.

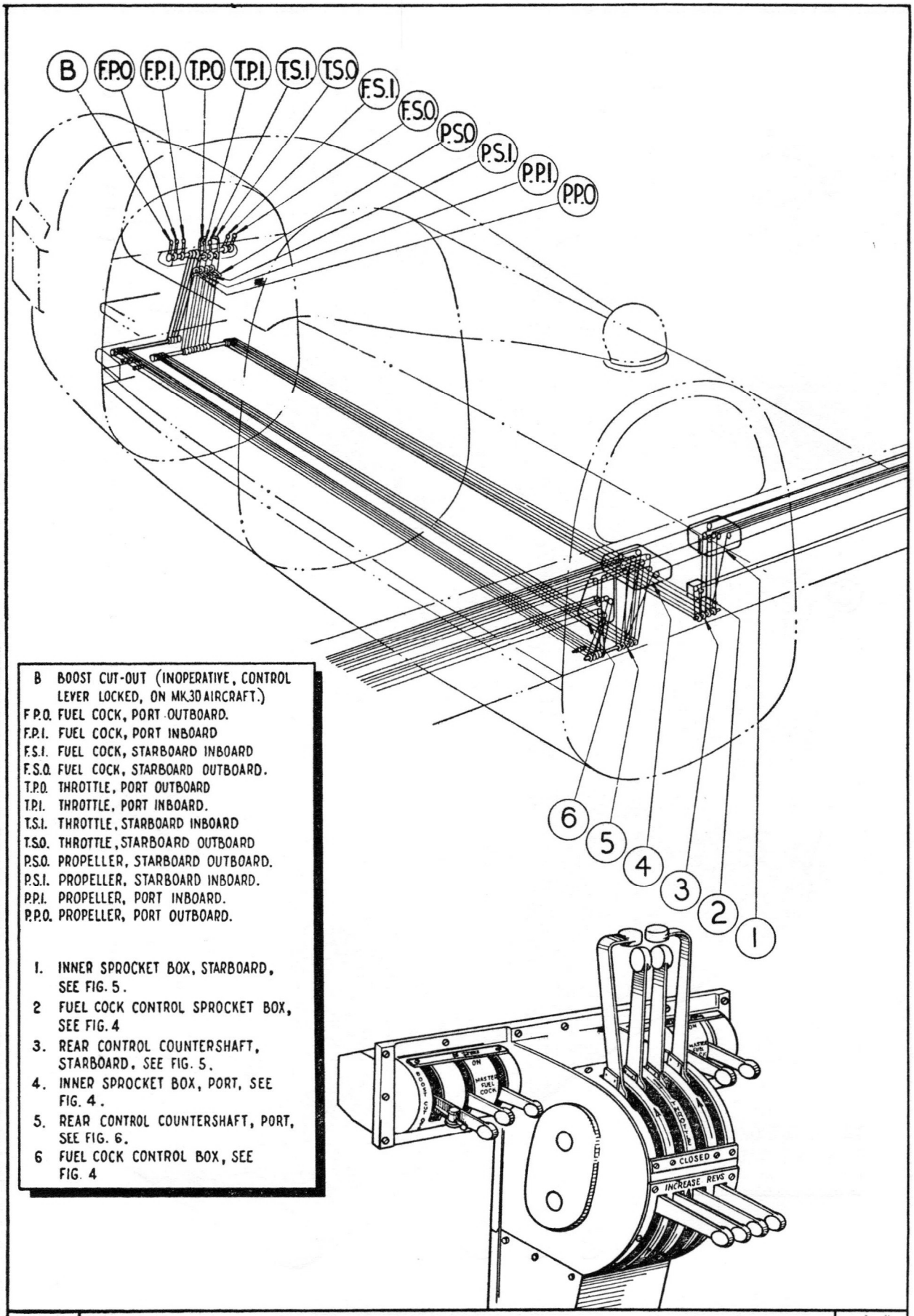

1	ENGINE & SECONDARY CONTROLS – FUSELAGE	1

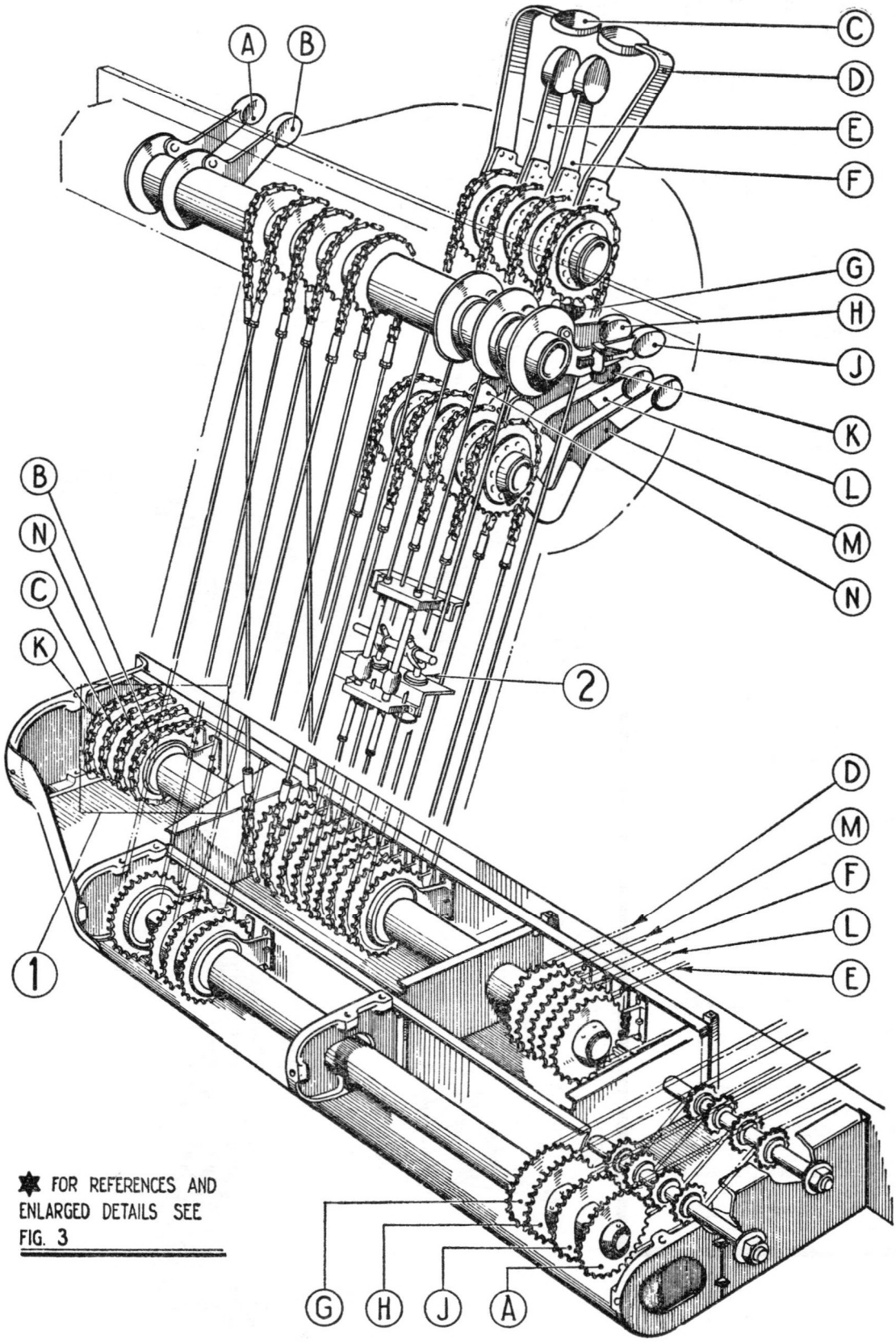

2	ENGINE CONTROLS - COCKPIT (1)	2

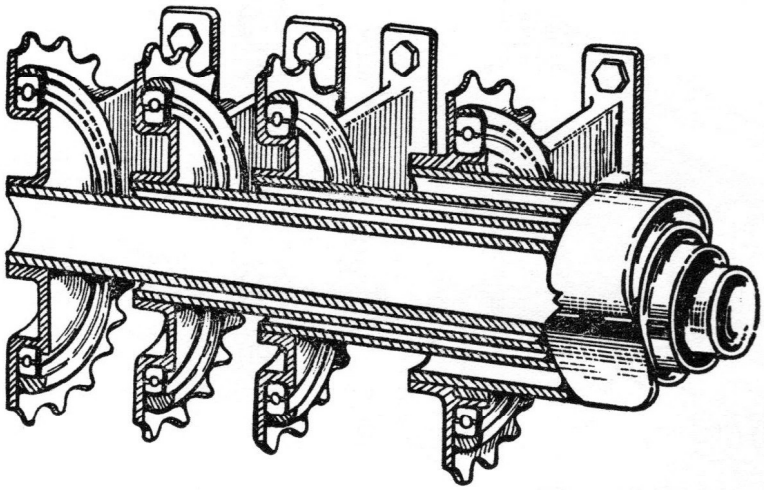

DETAIL 1. PORTION OF COUNTERSHAFT.

REFERENCES FOR FIG. 2.

A. FUEL COCK, STARBOARD, OUTBOARD.
B. FUEL COCK, STARBOARD, INBOARD.
C. THROTTLE, STARBOARD OUTBOARD
D. THROTTLE PORT OUTBOARD
E. THROTTLE STARBOARD INBOARD
F. THROTTLE PORT INBOARD.
G. FUEL COCK PORT INBOARD
H. FUEL COCK PORT OUTBOARD.
J. BOOST CUT-OUT
K. PROPELLER, STARBOARD INBOARD
L. PROPELLER, PORT INBOARD
M. PROPELLER, PORT OUTBOARD.
N. PROPELLER STARBOARD, OUTBOARD.

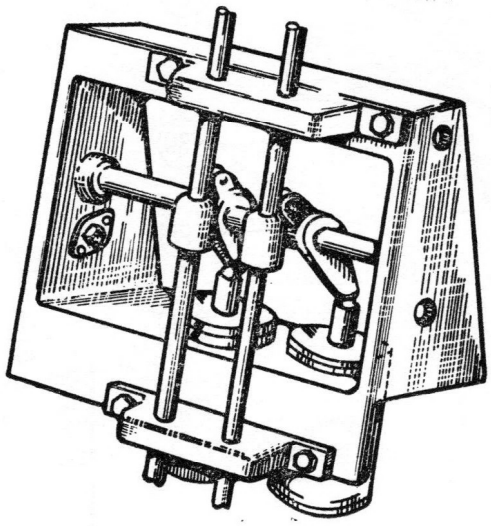

DETAIL 2 _ UNDERCARRIAGE WARNING SWITCHES.

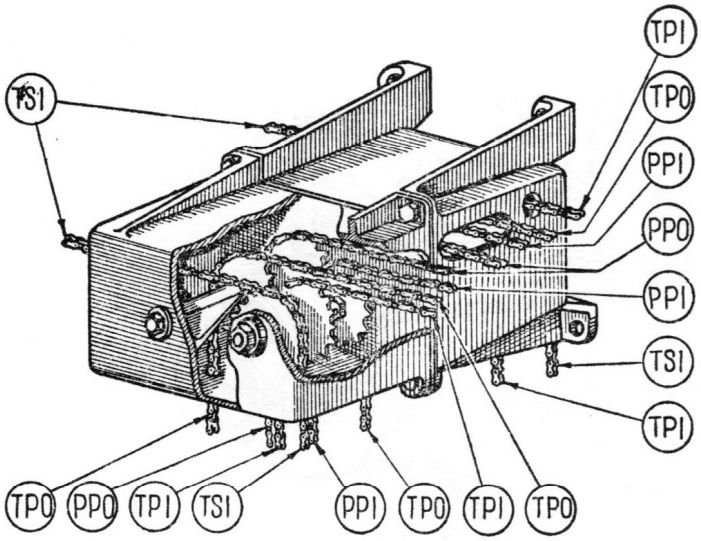

INNER PORT SPROCKET BOX

TPI	THROTTLE, PORT INBOARD.
TPO	THROTTLE, PORT OUTBOARD.
TSI	THROTTLE, STARBOARD INBOARD.
PPI	PROPELLER, PORT INBOARD.
PPO	PROPELLER, PORT OUTBOARD.

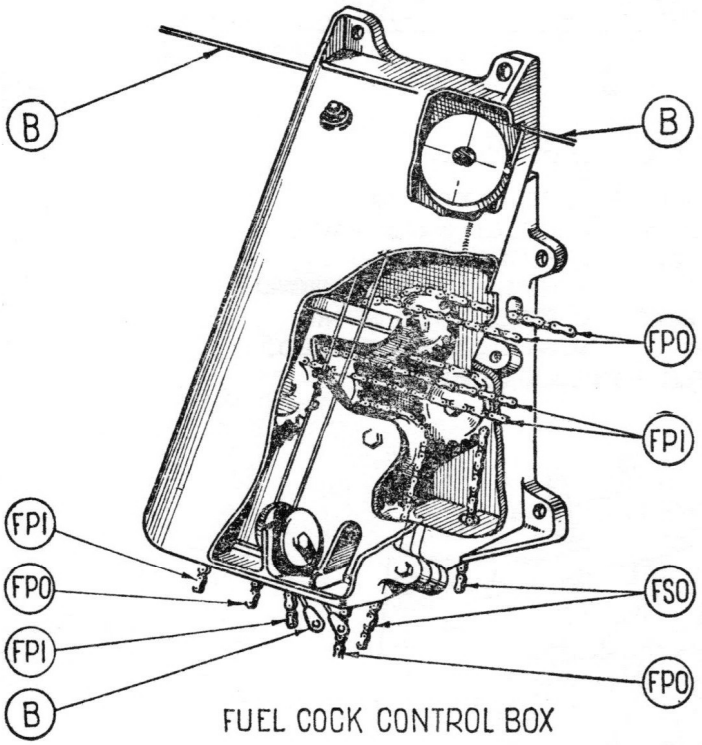

FUEL COCK CONTROL BOX

·B	BOOST CONTROL CUT-OUT. (IN-OPERATIVE ON MERLIN 85 ENGINES)
FPO	FUEL COCK, PORT OUTBOARD.
FPI	FUEL COCK, PORT INBOARD.
FSO	FUEL COCK, STARBOARD OUTBOARD

FSI	FUEL COCK STARBOARD INBOARD
PSO	PROPELLER STARBOARD OUTBOARD

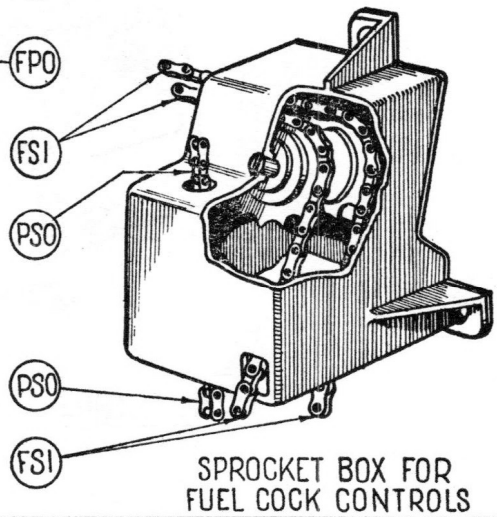

SPROCKET BOX FOR FUEL COCK CONTROLS

INNER SPROCKET
BOX, STARBOARD

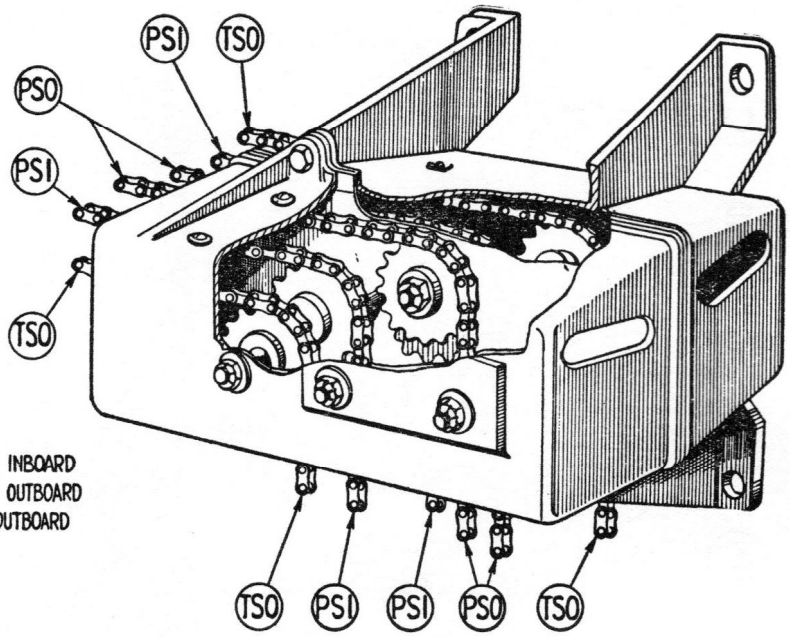

PSI PROPELLER, STARBOARD INBOARD
PSO PROPELLER, STARBOARD OUTBOARD
TSO THROTTLE, STARBOARD OUTBOARD

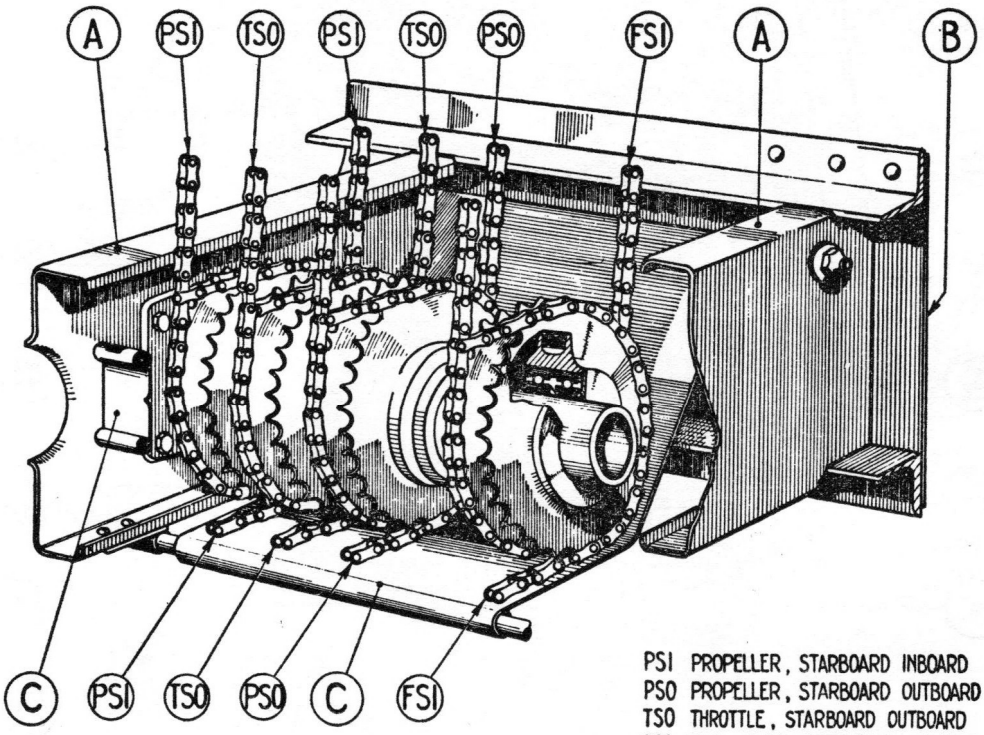

PSI PROPELLER, STARBOARD INBOARD
PSO PROPELLER, STARBOARD OUTBOARD
TSO THROTTLE, STARBOARD OUTBOARD
FSI FUEL COCK, STARBOARD INBOARD
A FLOOR INTERCOSTALS
B FRONT SPAR WEB.
C CHAIN GUARDS

REAR CONTROL COUNTERSHAFT,
STARBOARD SIDE OF FUSELAGE

5	ENGINE CONTROLS – FUSELAGE (2)	5

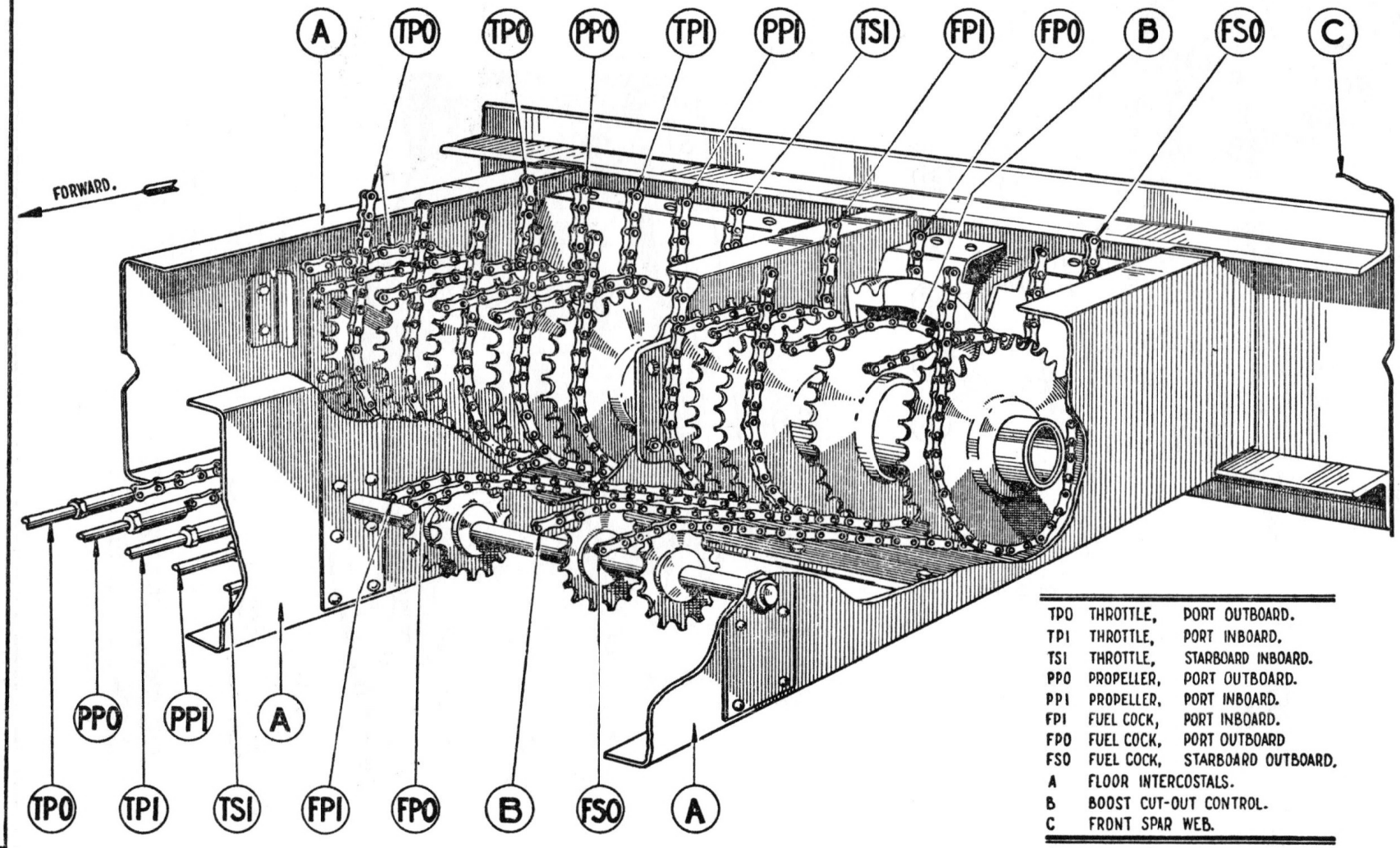

TPO	THROTTLE,	PORT OUTBOARD.
TPI	THROTTLE,	PORT INBOARD.
TSI	THROTTLE,	STARBOARD INBOARD.
PPO	PROPELLER,	PORT OUTBOARD.
PPI	PROPELLER,	PORT INBOARD.
FPI	FUEL COCK,	PORT INBOARD.
FPO	FUEL COCK,	PORT OUTBOARD
FSO	FUEL COCK,	STARBOARD OUTBOARD.
A	FLOOR INTERCOSTALS.	
B	BOOST CUT-OUT CONTROL.	
C	FRONT SPAR WEB.	

REAR CONTROL COUNTERSHAFT — PORT SIDE OF FUSELAGE.

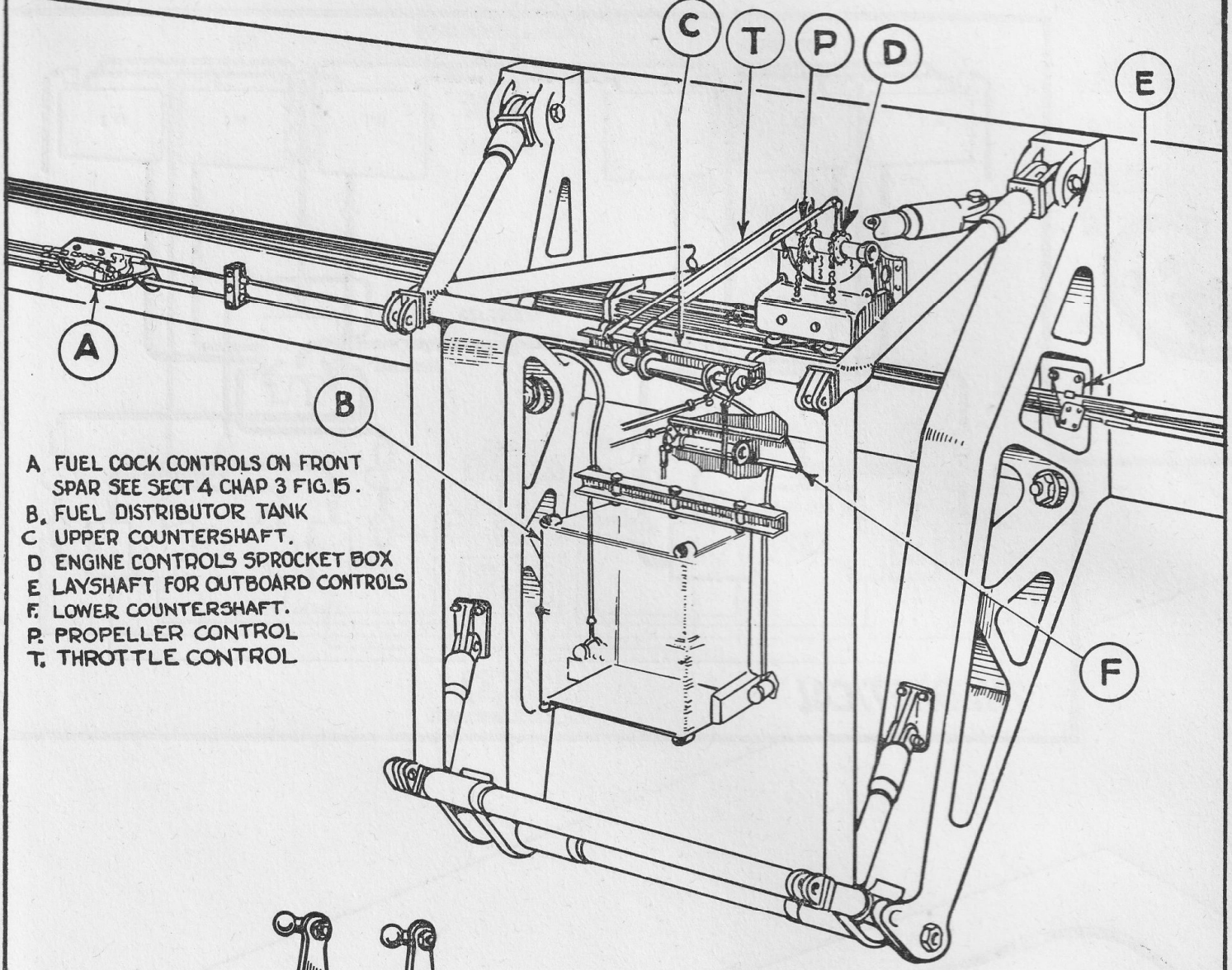

A FUEL COCK CONTROLS ON FRONT SPAR SEE SECT 4 CHAP 3 FIG. 15.
B. FUEL DISTRIBUTOR TANK
C UPPER COUNTERSHAFT.
D ENGINE CONTROLS SPROCKET BOX
E LAYSHAFT FOR OUTBOARD CONTROLS
F. LOWER COUNTERSHAFT.
P. PROPELLER CONTROL
T. THROTTLE CONTROL

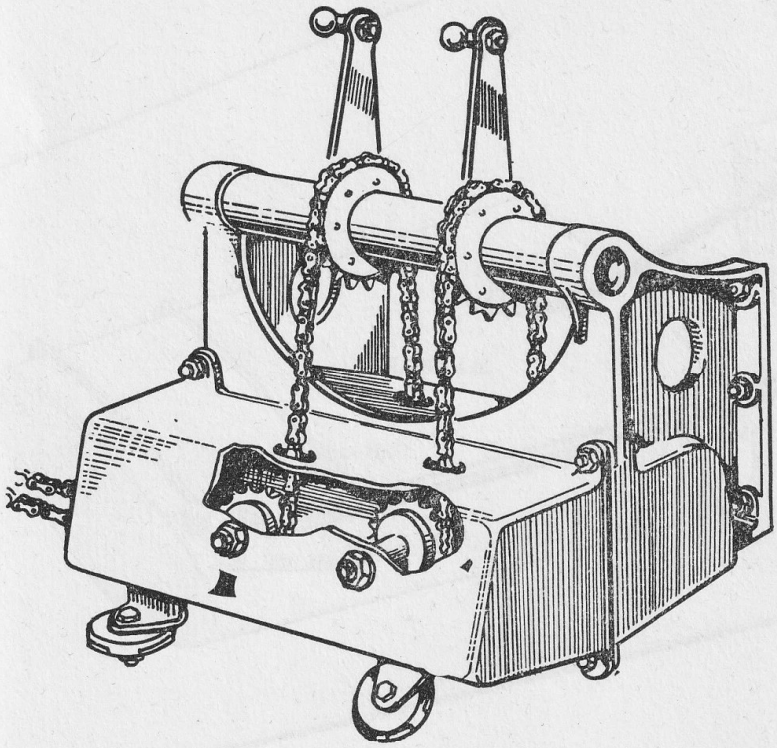

ENGINE CONTROLS SPROCKET BOX - 'D'

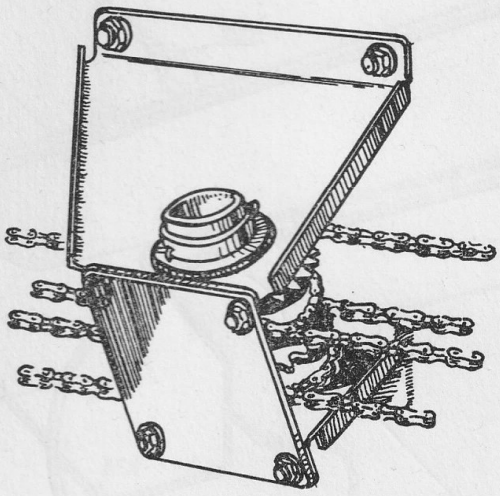

LAYSHAFT - 'E'

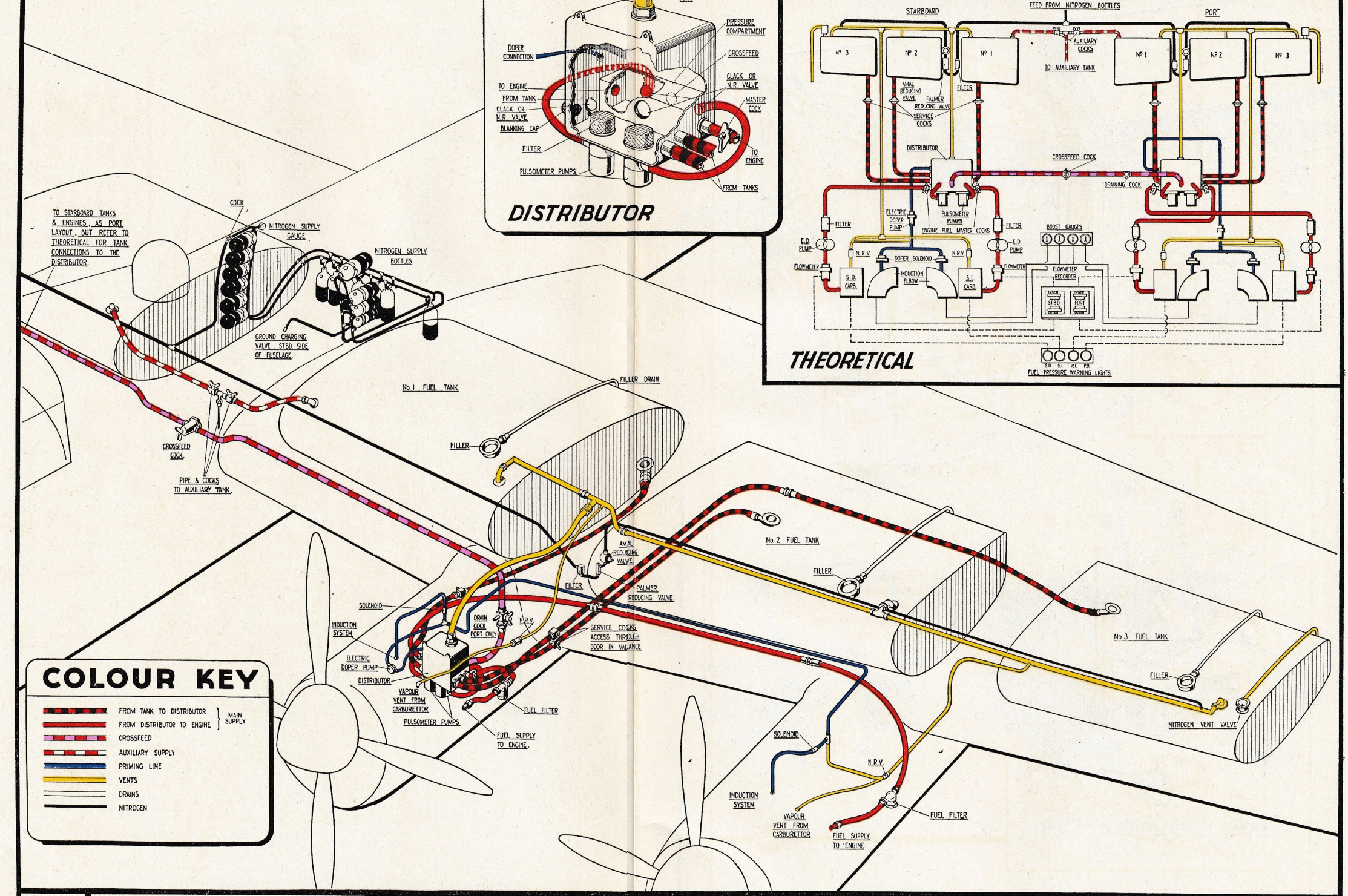
DISTRIBUTOR
PRESSURE COMPARTMENT
DOPER CONNECTION
CROSSFEED
CLACK OR N.R. VALVE
TO ENGINE
FROM TANK
CLACK OR N.R. VALVE
MASTER COCK
BLANKING CAP
FILTER
TO ENGINE
FULSOMETER PUMPS
FROM TANKS
THEORETICAL
FEED FROM NITROGEN BOTTLES
STARBOARD
PORT
Nº 3
Nº 2
Nº 1
AUXILIARY COCKS
TO AUXILIARY TANK
AMAL REDUCING VALVE
PALMER REDUCING VALVE
SERVICE COCKS
FILTER
DISTRIBUTOR
CROSSFEED COCK
DRAINING COCK
ELECTRIC DOPER PUMP
PULSOMETER PUMPS
ENGINE FUEL MASTER COCKS
BOOST GAUGES
E.D. PUMP
N.R.V.
DOPER SOLENOID
FLOWMETER
INDUCTION ELBOW
S.O. CARB.
S.I. CARB.
FLOWMETER RECORDER
S.O. S.I. P.I. P.O.
FUEL PRESSURE WARNING LIGHTS.
TO STARBOARD TANKS & ENGINES, AS PORT LAYOUT, BUT REFER TO THEORETICAL FOR TANK CONNECTIONS TO THE DISTRIBUTOR.
COCK
NITROGEN SUPPLY GAUGE
NITROGEN SUPPLY BOTTLES
GROUND CHARGING VALVE, STBD. SIDE OF FUSELAGE.
No. 1 FUEL TANK
FILLER DRAIN
FILLER
CROSSFEED COCK.
PIPE & COCKS TO AUXILIARY TANK.
No. 2 FUEL TANK
FILLER
No. 3 FUEL TANK
FILLER
NITROGEN VENT VALVE
AMAL REDUCING VALVE.
FILTER
PALMER REDUCING VALVE.
SOLENOID
INDUCTION SYSTEM
DRAIN COCK PORT ONLY
N.R.V.
SERVICE COCKS ACCESS THROUGH DOOR IN VALANCE
ELECTRIC DOPER PUMP
DISTRIBUTOR
VAPOUR VENT FROM CARBURETTOR
PULSOMETER PUMPS
FUEL FILTER
FUEL SUPPLY TO ENGINE.
SOLENOID
N.R.V.
INDUCTION SYSTEM
VAPOUR VENT FROM CARBURETTOR
FUEL SUPPLY TO ENGINE
FUEL FILTER
COLOUR KEY
FROM TANK TO DISTRIBUTOR
FROM DISTRIBUTOR TO ENGINE
MAIN SUPPLY
CROSSFEED
AUXILIARY SUPPLY
PRIMING LINE
VENTS
DRAINS
NITROGEN

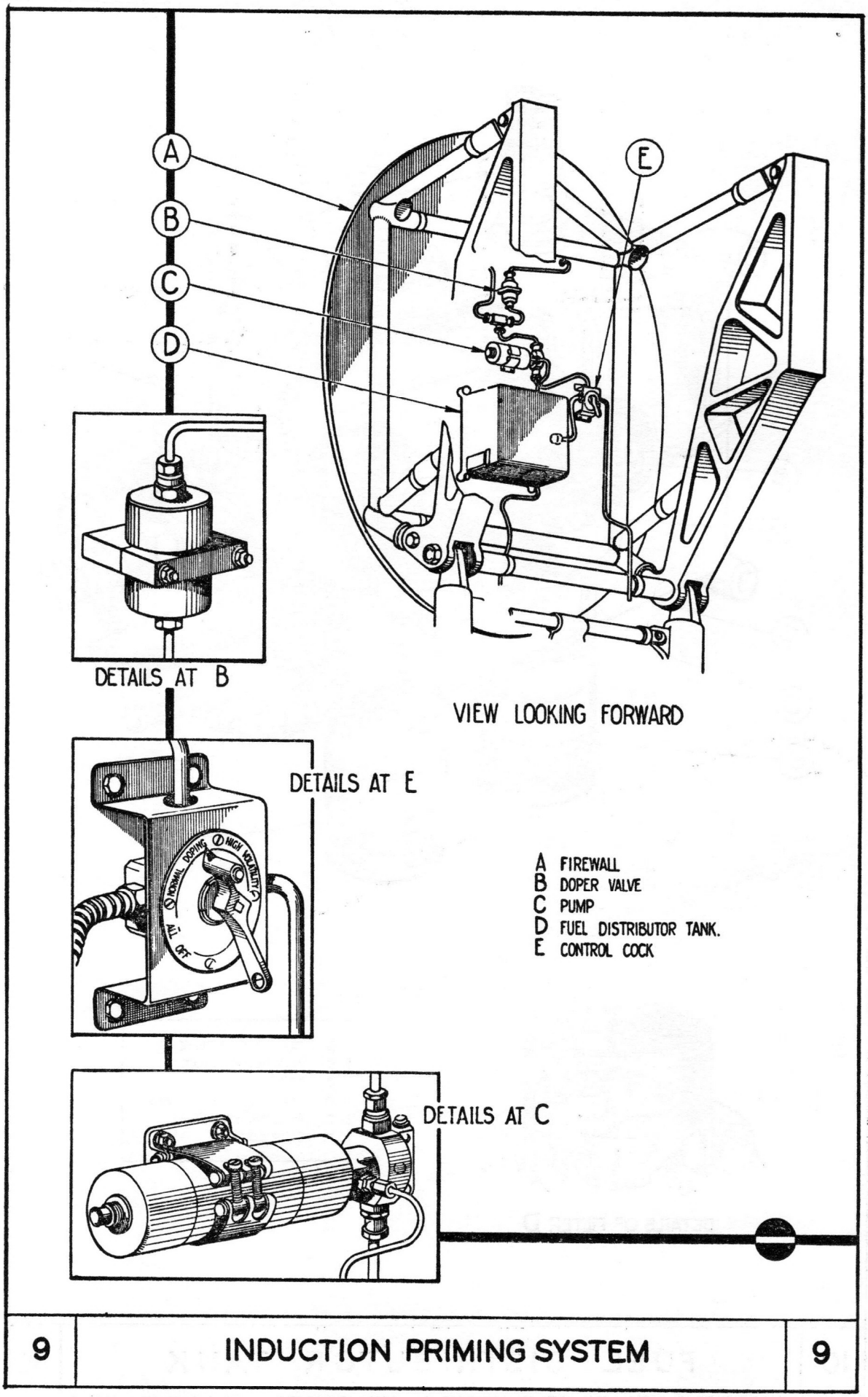

9	INDUCTION PRIMING SYSTEM	9

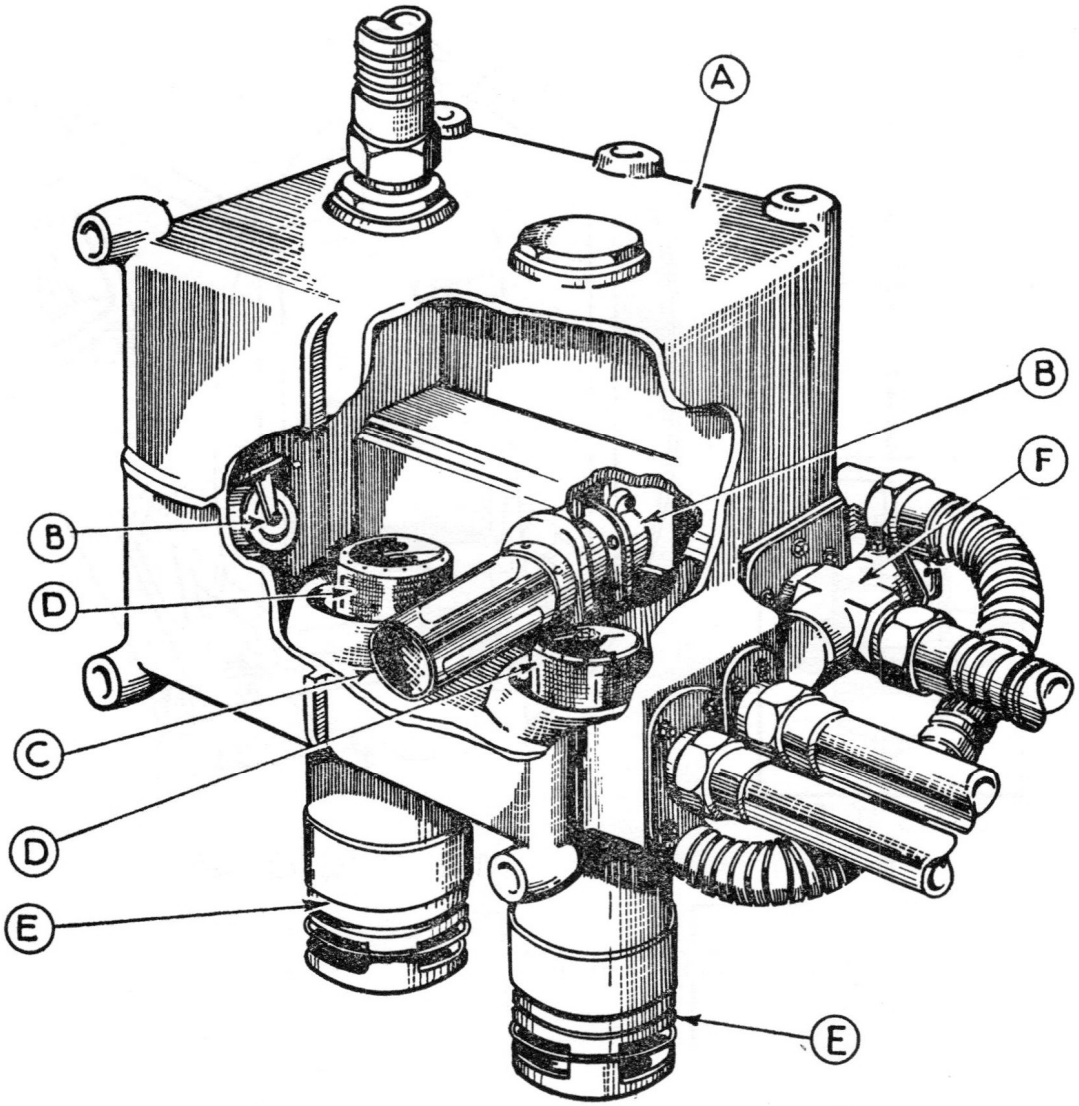

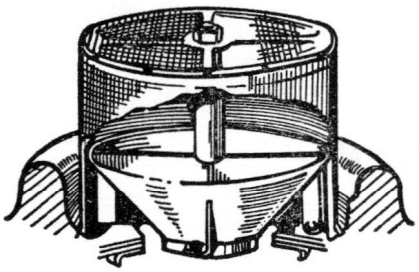

DETAILS OF FILTER D

A	DISTRIBUTOR TANK
B	NON-RETURN VALVE
C	FILTER
D	PUMP FILTER SEE DETAILS
E	PULSOMETER PUMPS
F	STOP COCK .

DETAIL 1. ATTACHMENT OF PROTECTIVE COVERING AT FILLER CAP.

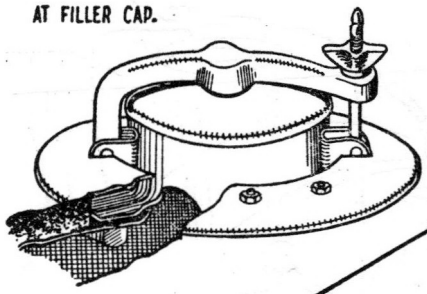

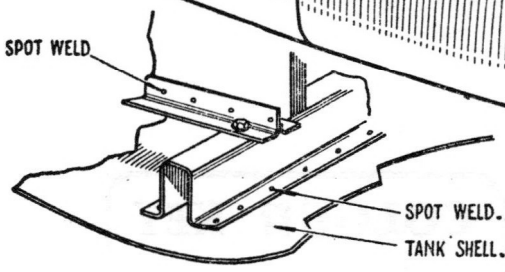

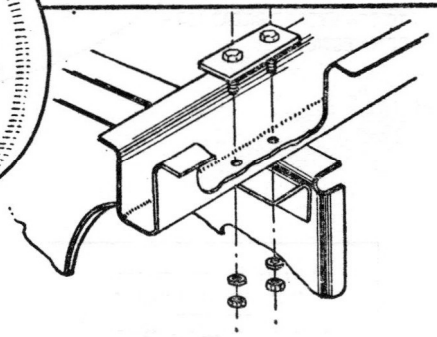

DETAILS 3 & 4. ATTACHMENT OF STRINGERS TO BAFFLE.

DETAIL 2

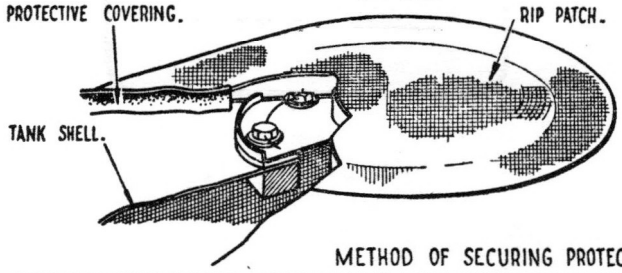

THE ILLUSTRATION SHOWS THE TANK WITHOUT PROTECTIVE COVERING WHICH IS HOWEVER INDICATED IN DETAILS Nº 1 & 2.

METHOD OF SECURING PROTECTIVE COVERING AT INSPECTION DOORS.

11	FUEL TANK Nº 1	11

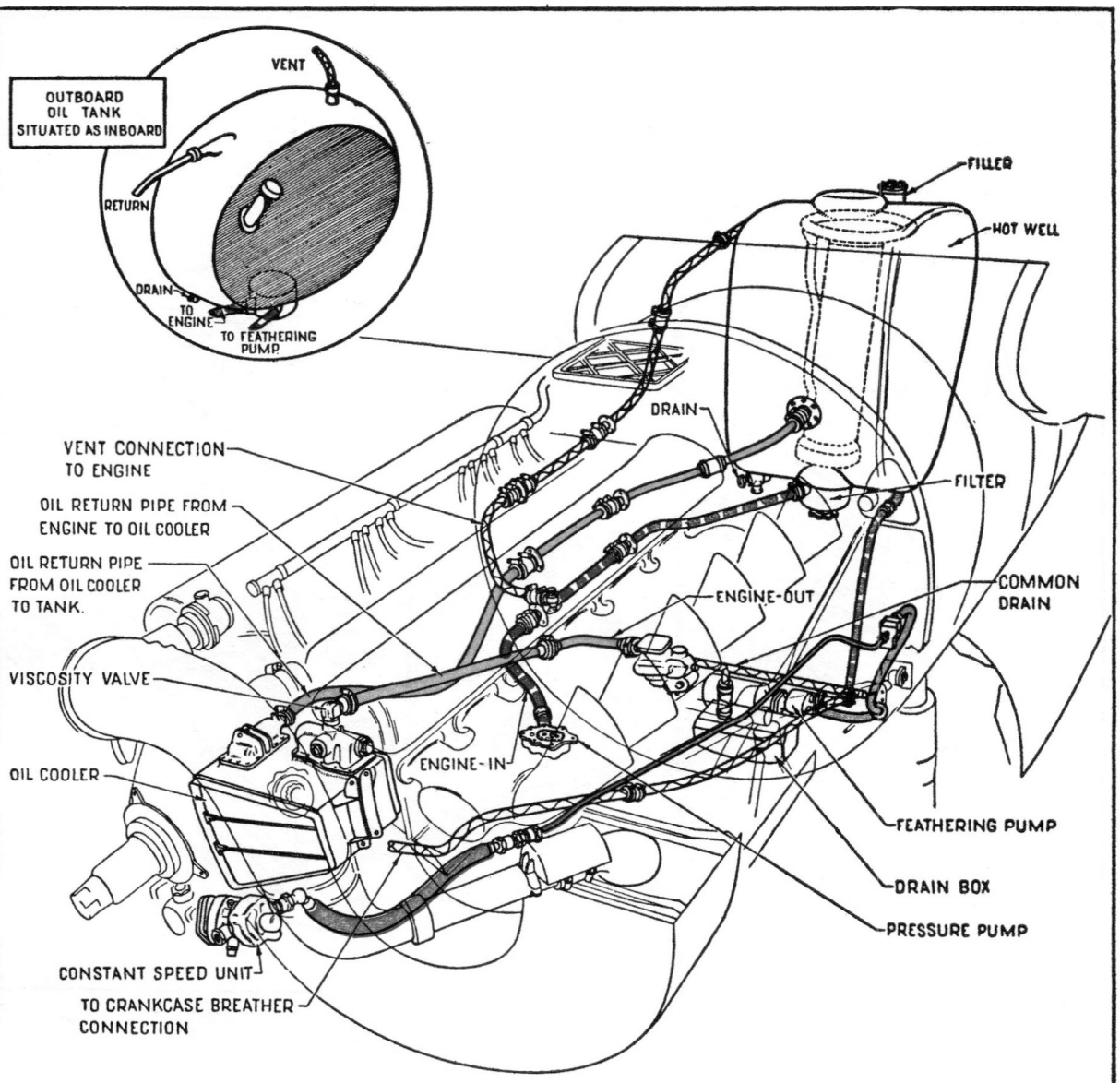

OIL TANK POSITIONED AFT OF FRONT SPAR & IN NACELLE

OIL CAPACITY — 37½ GALLS.
AIR SPACE — 4½ GALLS.

NOTE :-
INBOARD SYSTEM DEPICTED.
OUTBOARD SYSTEM IDENTICAL BUT SHAPE OF TANK AS INSET ABOVE

COLOUR KEY

- SCAVENGE
- SUCTION
- VENT
- HIGH PRESSURE

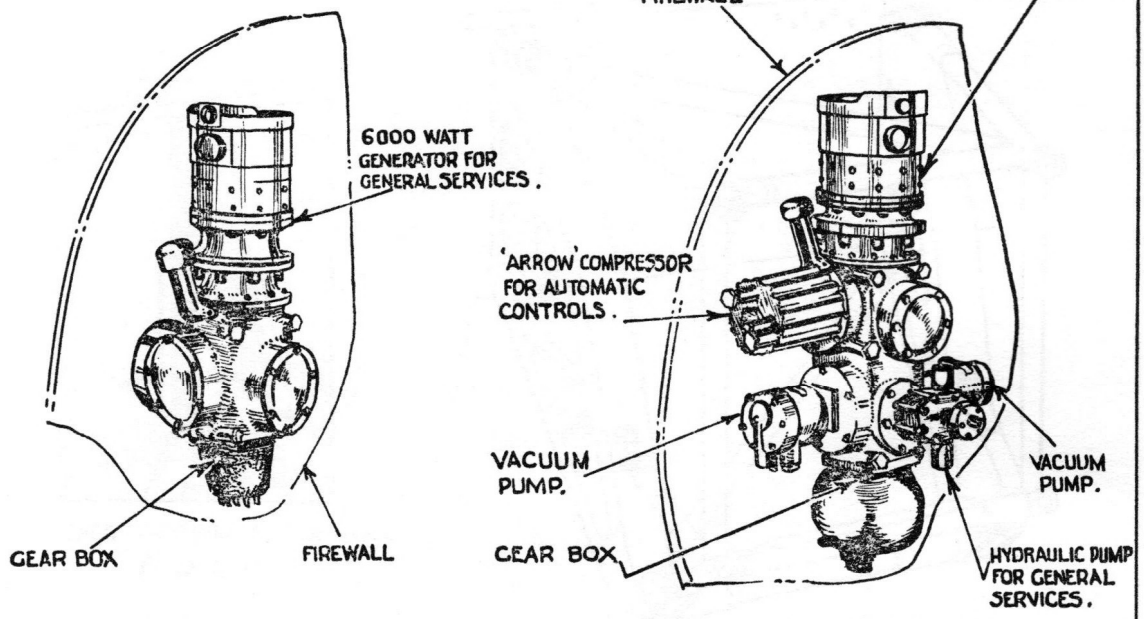
6000 WATT GENERATOR FOR GENERAL SERVICES.
GEAR BOX
FIREWALL
PORT OUTBOARD ENGINE
FIREWALL
6000 WATT GENERATOR FOR GENERAL SERVICES
'ARROW' COMPRESSOR FOR AUTOMATIC CONTROLS.
VACUUM PUMP.
GEAR BOX
VACUUM PUMP.
HYDRAULIC PUMP FOR GENERAL SERVICES.
PORT INBOARD ENGINE

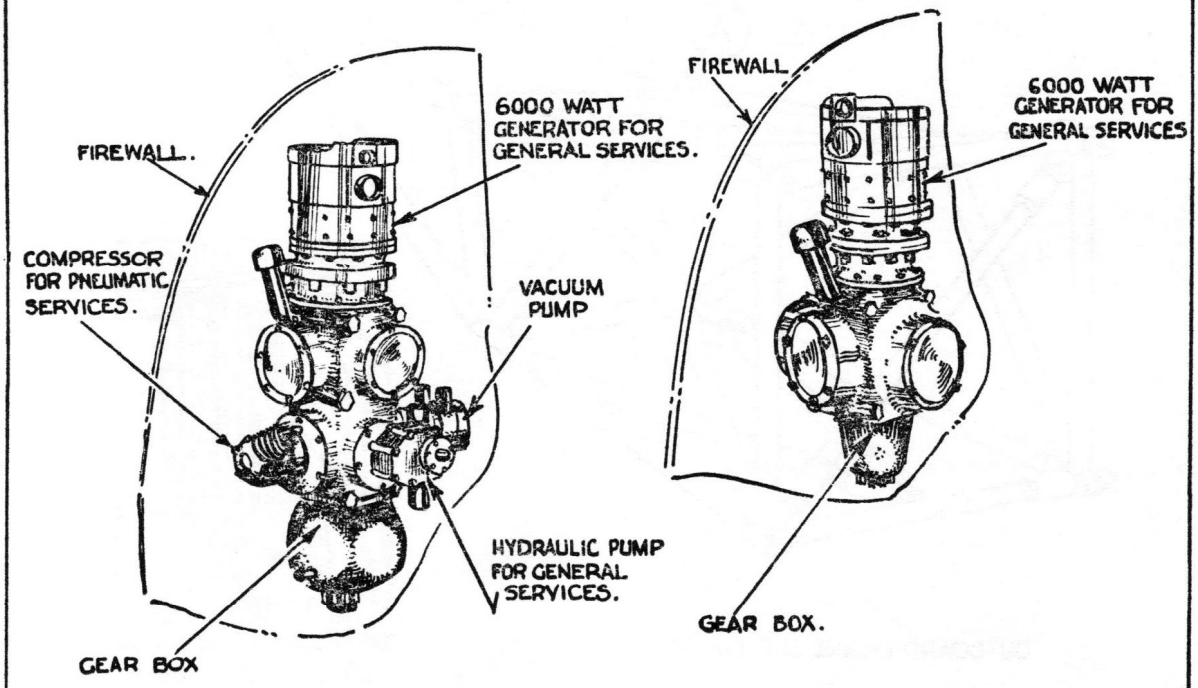
FIREWALL.
6000 WATT GENERATOR FOR GENERAL SERVICES.
COMPRESSOR FOR PNEUMATIC SERVICES.
VACUUM PUMP
HYDRAULIC PUMP FOR GENERAL SERVICES.
GEAR BOX
STARBOARD INBOARD ENGINE
FIREWALL
6000 WATT GENERATOR FOR GENERAL SERVICES
GEAR BOX.
STARBOARD OUTBOARD ENGINE.

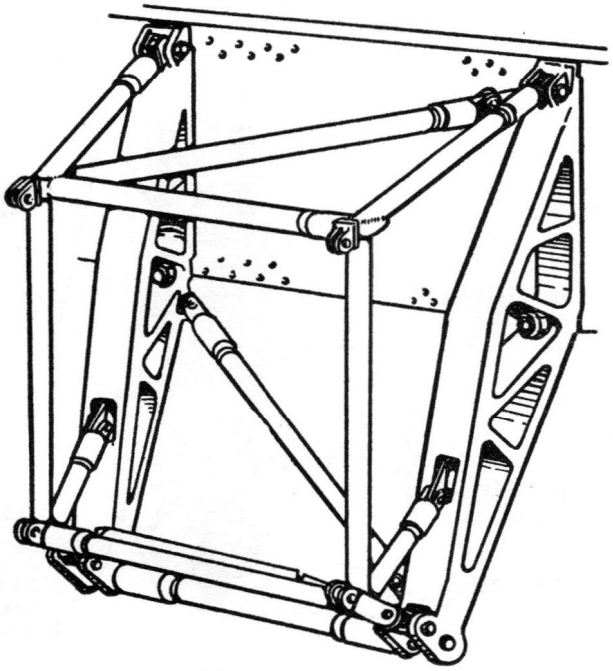

INBOARD ENGINE SUB-FRAME

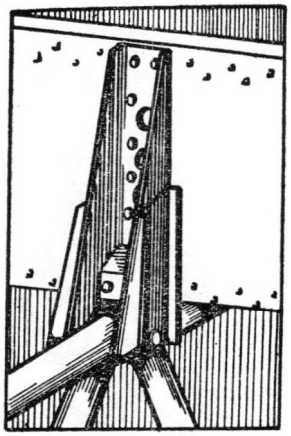

ATTACHMENT TO FRONT SPAR AT **A**

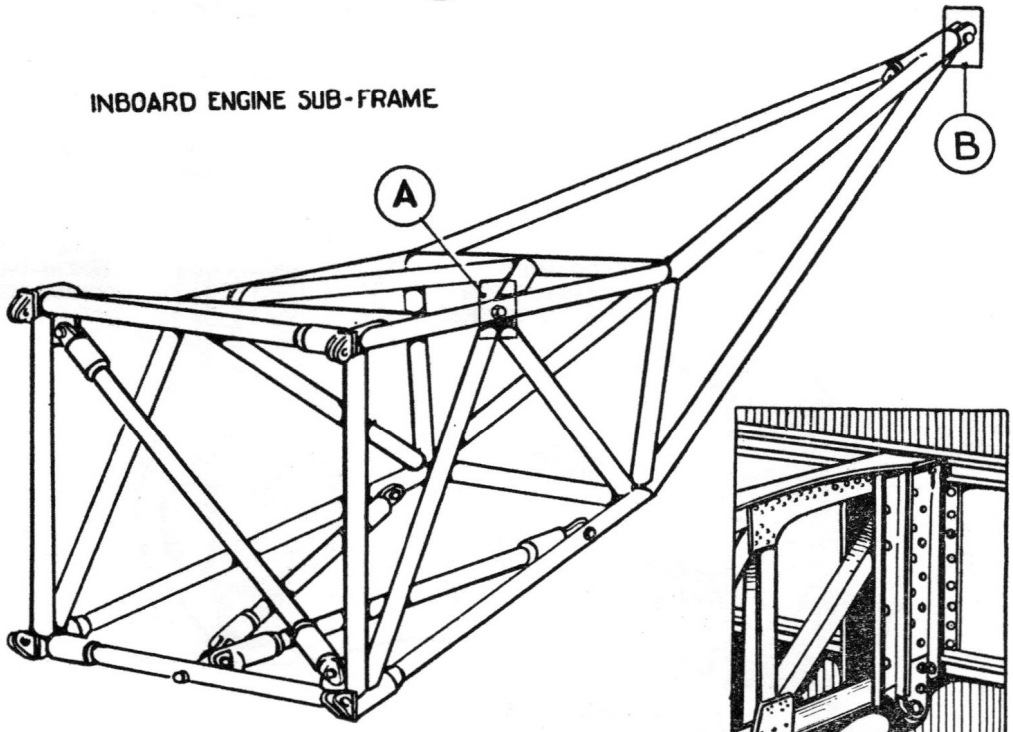

OUTBOARD ENGINE SUB-FRAME

ATTACHMENT TO REAR SPAR AT **B**

Section 9

Hydraulic & Pneumatic Systems

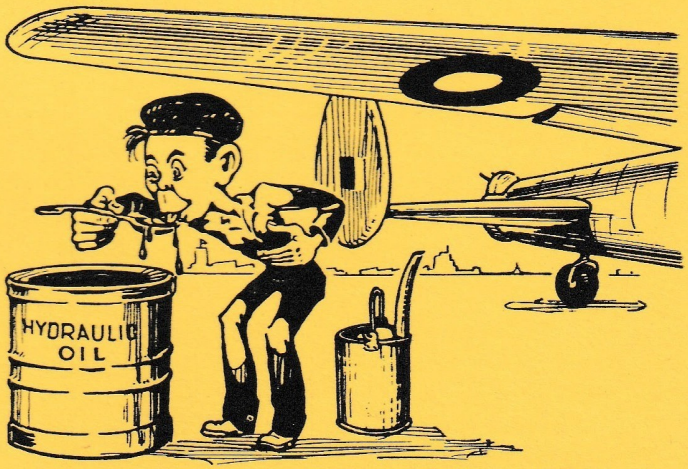

WHEN REPLENISHING THE HYDRAULIC RESERVOIR, EGBERT, ASCERTAIN THAT OIL TO THE CORRECT SPECIFICATION IS USED, D.T.D. 585, R.A.A.F. STORES REFERENCE № K2/138.

SECTION 9

Hydraulic and Pneumatic Systems

CONTENTS

	Para.
HYDRAULIC SYSTEM — GENERAL SERVICES —	
GENERAL	1
SUPPLY CIRCUIT	2
MAIN UNDERCARRIAGE WHEELS CIRCUIT	5
FLAPS CIRCUIT	6
EMERGENCY SYSTEM—FLAPS AND MAIN WHEELS	7
BOMB DOOR CIRCUIT	10
Emergency opening of bomb doors ...	11
FUEL JETTISON SYSTEM	12
Emergency operation of jettison system	16

	Fig.
PNEUMATIC SYSTEM —	
GENERAL	17
Supply circuit	18
Brakes system	19
Radiator flap system	20
Supercharger two-speed control... ...	21
Slow-running cut-out control	22
Hot and cold air intakes	23
Air cleaner	24
AIR CHARGING	25

ILLUSTRATIONS

	Fig.
Hydraulic system (i)	1
Hydraulic system (ii) — Primary (or pumps) system, bomb doors, undercarriage emergency air, wing flaps emergency air	2
Hydraulic system (iii) — Fuel jettison...	3
Pneumatic system	4

Hydraulic and Pneumatic Systems

HYDRAULIC SYSTEM — GENERAL SERVICES

General

1. The hydraulic system operates the undercarriage wheels, bomb doors, main plane flaps and fuel jettison valves. An engine-driven pump is mounted on the auxiliaries panel and gearbox at the rear of the firewall of each inboard engine. Oil supply to the jacks of the systems concerned is controlled by lever-operated valve boxes in the cockpit (see Section 1). A hand pump is mounted in a vertical position on the port wall of the fuselage centre section, between the front spar and the fuselage doors, immediately aft of the reservoir and distributor block. The hand pump incorporates a pressure relief valve set at 825/875 lbs./sq. in., and is in circuit with No. 1 fuel tank jettison and air vent valves, bomb door jacks, flap jacks and undercarriage main wheel jacks; but in flight its practical use is limited to emergency operation of the fuel jettison system. The large capacities of the jacks in the system militate against use of the hand pump for any of the other services. The engine-driven pumps idle, circulating fluid at low pressure through a filter and automatic cut-out (see paragraph 3) and back through a by-pass to the reservoir, until any of the system control valves are opened. A circuit diagram for the hydraulic system is shown in Fig. 1. The layout of the pipe lines and system components is illustrated in Section 4, Chapter 3. (For description of components see A.P.1803D, Vol. I.)

SUPPLY CIRCUIT

2. The supply and return lines from each pump incorporate Avery self-sealing couplings, which enable the pipes to be sealed when the aircraft pumps are disconnected, as, for example, when it is desired to connect a ground test rig to the system. The self-sealing couplings are mounted on the cross-stay between each pair of undercarriage beams. Reaction of one engine-driven pump upon the other is prevented by the non-return valve in each supply line.

3. When any circuit is operated, initial pressure is supplied from an accumulator connected to the pump delivery line and to the automatic cut-out valve. The accumulator is on the delivery side of the cut-out valve; selection of any circuit by the appropriate control valve results in immediate response by the pressure in the accumulator, and the pistons of the related jacks start to move. When the pressure in the accumulator decreases to 500 lb. per sq. in., the automatic cut-out valve operates and directs the oil flow from the engine-driven pumps to the circuit then functioning. This condition continues until the jacks have reached the end of their travel, after which the continued delivery of fluid from the pumps is used to recharge the accumulator until the pressure builds up to 825/875 lb. per sq. in. The cut-out valve then diverts the fluid delivery through a by-pass to the reservoir and the pumps again idle.

4. An emergency air operating valve connected to a remote control knob mounted forward of the flight engineer's panel controls the supply of compressed air for lowering the main undercarriage wheels and braking flaps in the event of failure of the hydraulic system. Two emergency air bottles, of a similar type to those used for oxygen, and inflated to 1200/1300 lb. per sq. in., are mounted at the rear of the front spar.

MAIN UNDERCARRIAGE WHEELS CIRCUIT

5. Control of the main wheels is from a two-position selector valve box on the right of the pilot's seat. The tail wheel is a fixed, non-retractable type. The manually controlled lever moves in natural sense; with lever UP the undercarriage is raised, and with lever DOWN the undercarriage is lowered. A spring-loaded bolt, mounted transversely, prevents inadvertent operation UP. When the UP position is selected, fluid is delivered through a non-return valve and through the undercarriage control valve to the under surface of the jack pistons, and raises the undercarriage. The reverse movement, with control lever in DOWN position, entails a similar sequence; but the fluid, now

directed to the upper area of the jack pistons, is taken through valve units on the rear spar, in the undercarriage compartment, which incorporate the emergency air non-return valves. Oil displaced from the reverse side of the pistons has a free flow through the selector valve box to the distributor block at the base of the reservoir, and so to the reservoir itself, which is mounted above the front spar on the port side of the fuselage.

FLAPS CIRCUIT

6. The control unit for flap operation is mounted below the pilot's floor, its handle projecting above the floor to the right of the pilot. The handle has vertical movement, and can be set in one of three positions—UP, DOWN and NEUTRAL—neutral being its normal position. Fluid from the main delivery pipe passes through a single flap flow valve and a non-return valve to the control unit. The single flap jack mounted transversely on the main aircraft floor at the forward end of the rear centre section has one piston, located in its midway position when the flaps are half-open, and a piston rod emerging from each end of the jack, to attach to the flap operating tubes. When the control unit is in the DOWN position, fluid is delivered to the starboard side of the jack, moving the piston and rods towards port and sending the oil on the other side of the piston back through the UP connection and pipe lines to the reservoir. That sequence is reversed when the UP position is selected. The neutral position of the control lever enables the flaps to be retained in any desired intermediate position. Two flow-controlled by-pass valves and a one-way restrictor are located in the flap circuit and are positioned under the pilot's seat. Their purpose is to prevent excessive flap speeds, especially when flaps are retracting.

EMERGENCY SYSTEM — FLAPS AND MAIN WHEELS

7. In the event of failure of the engine-driven pumps or the main wheels circuit, the main wheels and flaps can be lowered by compressed air (see paragraph 4). The system is operated by means of the remote control knob forward of the flight engineer's panel. The main wheels lower at once, irrespective of the position of the main wheel control valve lever, but the flaps control remains inoperative until moved to the DOWN position. Air to the main wheel jacks is admitted to the upper side of the pistons through a non-return valve adjacent to the compressed air cylinder, then through an emergency air valve and through a transfer valve to the jack cylinders. A pressure relief valve set at 1200 ± 50 lb. per sq. in. is in circuit both with the emergency air and hydraulic lines

8. The air is locked in the main wheel system by the non-return valve as soon as the wheels are down. Through the emergency air valves the compressed air passes to valves which are opened by the air pressure and allow the fluid displaced from the underside of the jack pistons to vent to atmosphere. Concurrently, two emergency air non-return valves admit air and blank off the normal fluid supply to the jacks.

9. Emergency air passes to the flap control unit by an independent pipe line and then makes use of the existing hydraulic pipes to pass through the control unit and a one-way restrictor to the DOWN union of each jack. Two non-return valves are included; one prevents hydraulic fluid from entering the air line, the other prevents the air from escaping into the hydraulic lines. Fluid displaced from the other side of the flap jack returns to the reservoir through the normal return pipe.

BOMB DOOR CIRCUIT

10. Bomb doors are opened and closed by hydraulic pressure controlled from a selector valve and lever on the left-hand side of the pilot's seat. This valve is of similar type to that from the main undercarriage wheels, and has no neutral position. The UP and DOWN positions of the lever are operated in the natural sense. Fluid flow is through a non-return valve to the control valve, and then direct to the upper or lower sides of the four bomb door jacks for OPEN and CLOSED positions respectively, and fluid from the reverse side of the jack piston is exhausted to the reservoir via the selector valve box.

Emergency Opening of Bomb Doors

11. In the event of failure of the engine-driven pumps the doors will partly open by gravity when the control valve is placed in

the DOWN position. The hand pump can be used to complete the full opening of the doors, providing the relative pipe lines are intact.

FUEL JETTISON SYSTEM

12. The contents of the two inboard (No. 1) fuel tanks can be jettisoned. Operation of the circuit lifts a jettison valve off its seating in the base of the tank, through which fuel is discarded, and opens a disc type air valve in the top of the tank to compensate for the sudden reduction in volume. (See Fig. 3.)

13. The upward movement of the jettison valve spindle operates a cable which withdraws a pin, releasing a small door in the tank access panel, immediately below the jettison valve. The opening of this hinged door releases a double walled, extensible rubber stocking which directs the jettisoned fuel clear of the aircraft; some of the fuel passes between the double walls of the stocking, stiffening this member.

14. Control of the jettison system is by valve operated by remote control handle on the port side of the pilot's floor. There are two positions, NORMAL and JETTISON. When the control is selected to JETTISON, fluid under pressure is delivered from the hydraulic accumulator through the selector valve to the jettison and air valves of No. 1 tanks. The accumulator pressure must be more than 650 lb. per sq. in. for efficient operation of the system. The pressure drop will not be sufficient to cause the automatic cut-out to respond. If increased pressure is required in the accumulator, temporary actuation of one of the main hydraulic services—such as bomb doors—will cause the pumps to cut in and restore accumulator pressure.

15. By returning the control lever to NORMAL position, the pressure to the supply lines of the jettison and air valves is released, the valves are seated by return springs, and the fluid is exhausted to atmosphere through the control valve. No return line to the reservoir is fitted in the jettison system.

Emergency Operation of Jettison System

16. If the hydraulic feed system should fail, the jettison system can be operated by the accumulator, providing the pressure exceeds 650 lb. per sq. in. If the pressure in the accumulator is below 650 lb. per sq. in. when the supply system fails, it may still be possible to build up the pressure by means of the hand pump.

PNEUMATIC SYSTEM

General

17. The pneumatic system (see Fig. 3 and Section 4, Chapter 3, Fig. 22) operates the wheel brakes and provides air pressure for the electro-pneumatic operation of the following units:—The thermostatically controlled rams for the radiator flaps, the slow running cut-off rams, the hot and cold air intake rams, the rams for supercharger change speed control and the air cleaner rams. Compressed air for these services is supplied from a bottle in the fuselage nose. Pressure is maintained in the bottle at 450 lb. per sq. in. by a Heywood compressor on the starboard inboard engine. A pressure maintaining valve, set to 160 lb. per sq. in., is fitted to the supply line to all services except brakes, ensuring that there shall always be sufficient pressure in reserve for brake operations by cutting off the air supply to the other services if and when the pressure falls to the minimum. Wheel brake working pressure is 125 lb. per sq. in. If the compressor supply should fail, several applications of the brakes can still be made from the residual pressure in the bottle, and supercharger control will automatically engage M.S. gear.

Supply Circuit

18. All piping in the pneumatic system is of 20g. light alloy, except for the flexible hose connections in the nacelles, from the union on the firewall to the manifold on the engine diaphragm, and the flexible hose attached to the undercarriage oleo legs for the wheel brake connections. The supply from the compressor is by pipe to an oil-water trap (Part No. 37G/652), and thence to a pressure regulating valve, type AR5/450/1, in the outboard side of the nacelle, from which fitting pipes continue across the front spar and below the floor in the starboard side of the fuselage to connect to the air bottle, mounted in the fuselage roof between formers F and G. An A.G.S.1200 air charging valve is mounted on a cross tube between the undercarriage mounting beams at the rear of

the starboard inboard firewall, and connects by pipe and T-piece to the piping between the compressor and the oil-water trap. Air is delivered from the bottle through a filter to the brake and other services. (For installation of system, see Fig. 3.) Between the two short lengths of piping connecting the filter with a pressure reducing valve (AHO/5714), set to 220 lb. per sq. in., is a T-piece from which a pipe branches to a pressure gauge, calibrated in three segments, below the pilot's instrument panel. The pressure reducing valve is connected to a differential control valve by a pipe with a T-piece connecting to the pressure maintaining valve, from which unit piping is led through the forward bulkhead (former E) and under the fuselage floor on the port side. The pipe line rises at the rear of the fuselage front centre section, and extends outboard from a T-piece just forward of the front spar and through the wing root panels to supply the various pneumatic services in all four nacelles. The air filter, pressure reducing valve and pressure maintaining valve are grouped on a common panel mounted between formers F and G on the port wall of the fuselage nose section. (See also illustrations in Section 4, Chapter 3.)

Brakes System

19. Brake operation is controlled by a curved lever hinged to the pilot's hand wheel; motion is conveyed by Bowden cable to the differential control relay valve mounted on nose former F and linked by rod to the port rudder pedal arm. Air from the bottle passes through a filter and is distributed by the differential control valve to either or both port and starboard wheel brake units, the triple pressure gauge below the pilot's instrument panel having connection to each of the two pipe lines leading from the differential valve to the port and starboard wheels, and thus registering the pressure in the bottle and in each of the brake supply pipes. (For description, operation and maintenance of the units included in the brake system, see A.P.1519, Vol. I, and A.P.2337, Vol. I.)

Radiator Flap System

20. The radiator flaps are thermostatically controlled, and are operated by electro-pneumatic rams supplied with air by a pipe line in circuit with the brakes system supply, through a connection between the pressure maintaining valve and the pressure reducing valve. The piping runs aft in the port valance of the bomb cell, and outboard port and starboard along the front spar. A light alloy pipe, which terminates at an adaptor on the firewall, is connected by flexible pipe to a 5-way manifold on the forward face of the engine cowling ring or diaphragm. From this manifold, flexible pipes lead to the appropriate jacks, that for the radiator flap operating ram being on the port side of the power plant. (For details of operation and thermostatic control of these rams, see A.P.2861A, Vol. I.)

Supercharger Two-speed Control

21. The air supply for the electro-pneumatic ram operating the supercharger control is taken by flexible pipe from the 5-way manifold on the engine diaphragm (see paragraph 20). For electrical installation, see Section 6, and Section 10, and for details of control see A.P.2140B, C and D, Vol. I.

Slow Running Cut-out Control

22. The ram operating the slow running cut-out is electro-pneumatically controlled, with air supply from a connection on the manifold at the port side of the engine diaphragm. For electrical data see Sections 6 and 10, and for details of control see A.P.2861A, Vol. I.

Hot and Cold Air Intakes

23. Hot and cold air intake shutters are operated by an electro-pneumatic ram controlled by a switch on the pilot's instrument panel. Air supply is from a manifold common to all the power plant pneumatic services, mounted on the engine diaphragm and connected by flexible pipe to a union on the firewall. For electrical wiring see Section 6 and Section 10; for control see A.P.2861A, Vol. I.

Air Cleaner

24. This, also, has an electro-pneumatically controlled operating ram, mounted on the engine and with air supply connected from the 5-way manifold on the engine diaphragm

(see paragraph 20). The valve which controls the ram is electrically connected with the undercarriage system, through micro-switches on the undercarriage UP catches. The cleaners come into operation when the main wheels are locked DOWN. With the pilot's master switch at its normal OUT position, the air cleaners will retract when the main wheels lock UP, but can be extended in flight by moving the pilot's switch to IN. (For electrical data, see Section 6 and Section 10, and for operating details see A.P.2861A, Vol. I.)

AIR CHARGING

25. A pressure regulating valve at the rear of the inboard starboard firewall controls the charging of the compressed air bottles situated in the fuselage nose. The function of the pressure regulating valve is to ensure that the pressure in the air bottle remains at 450 lb. per sq. in. When the pressure rises to 450-470 lb. per sq. in. the resultant back pressure opens a valve which releases the air in the delivery line, allowing the compressor to idle whilst that valve is open. The large pointer on the triple pressure gauge indicates the pressure in the air bottle. A variation of from 440 lbs. to 460 lbs. per sq. in. is permissible. When the pressure in the bottle falls to 390-410 lb. per sq. in., the valve closes and charging is restarted. The bottle may be charged from the ground from external supply, for which purpose an air charging valve (A.G.S.1200) is fitted on a cross tube between the undercarriage beams of the starboard nacelle.

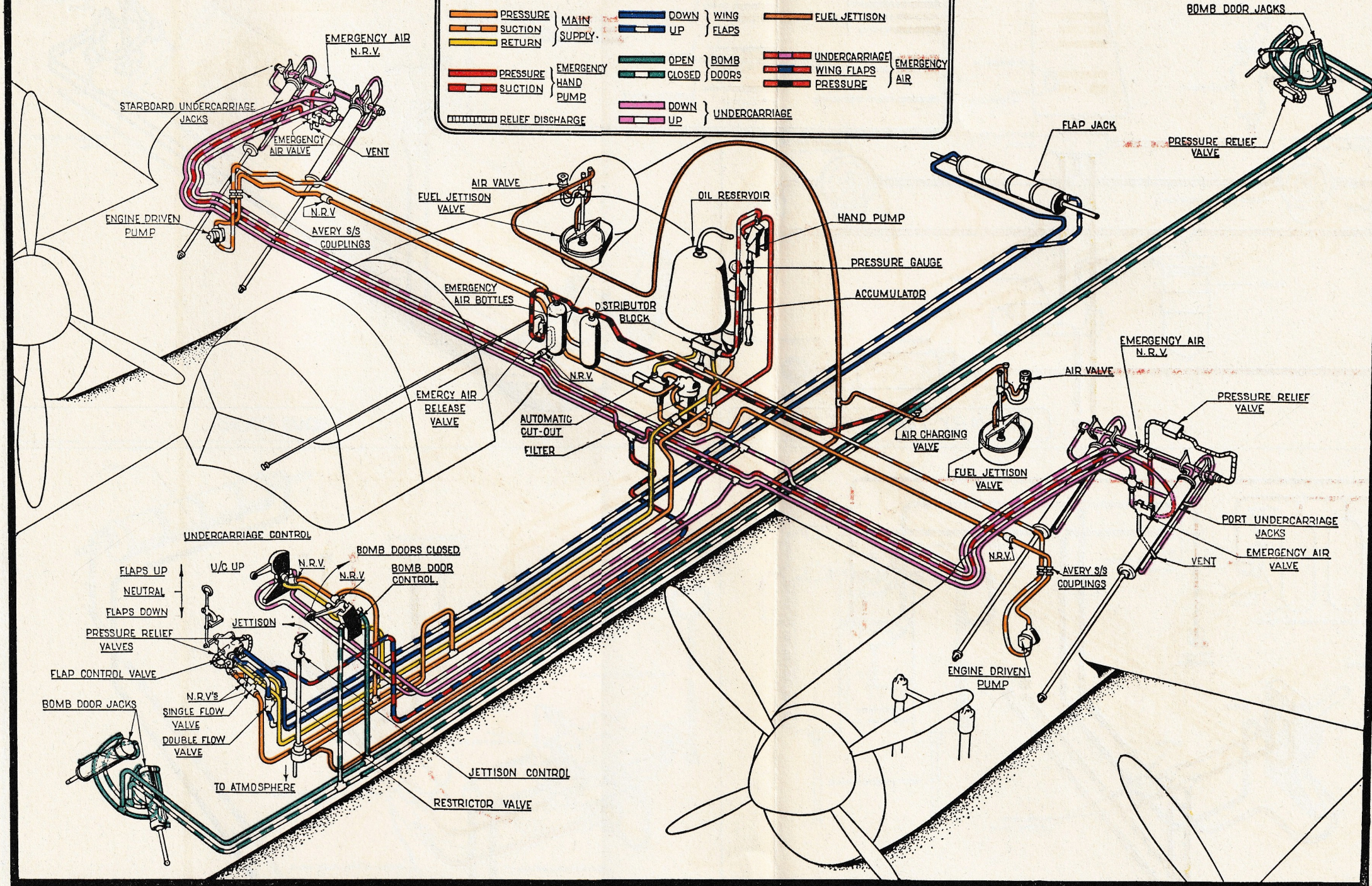

LINCOLN MK30 · *Hydraulic System*

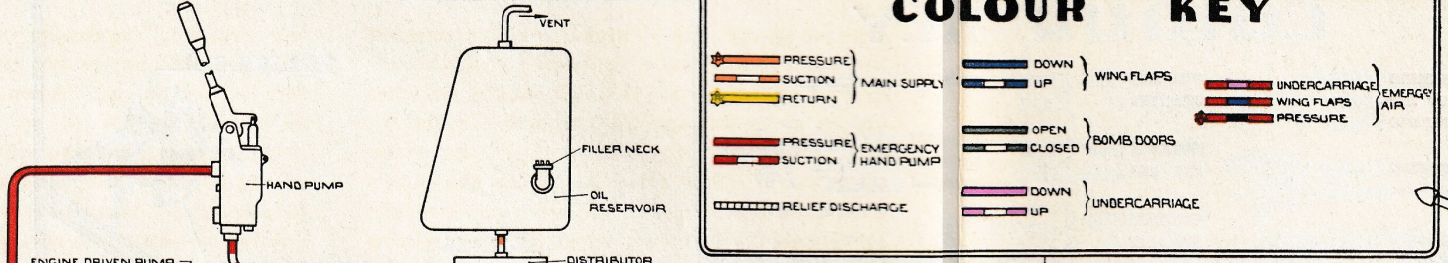

PRIMARY (OR PUMP) SYSTEM

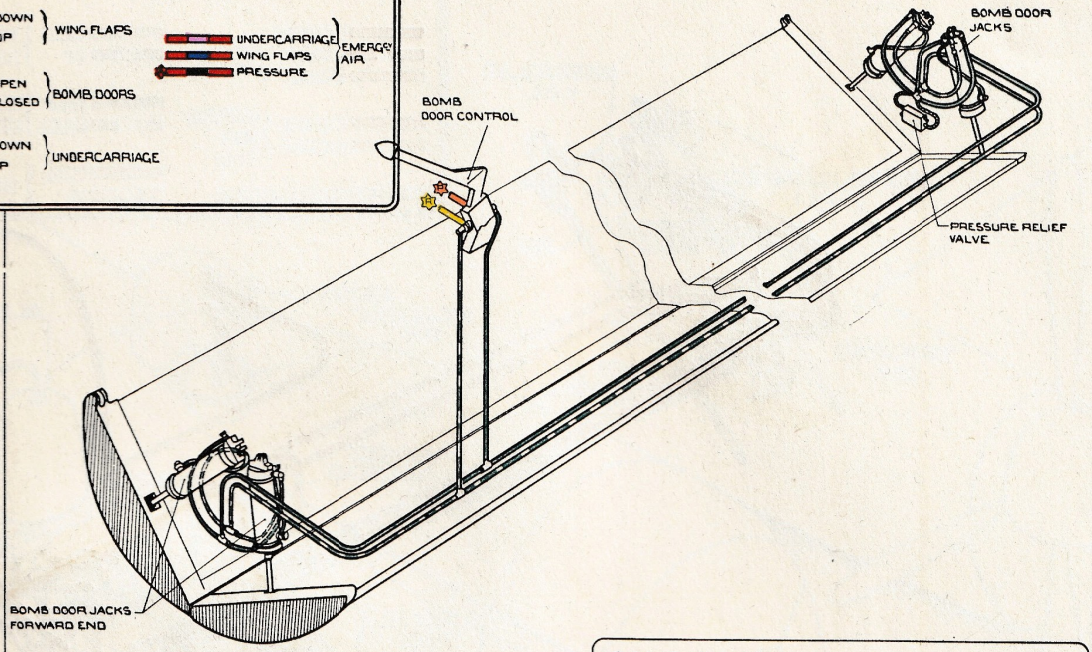

BOMB DOORS

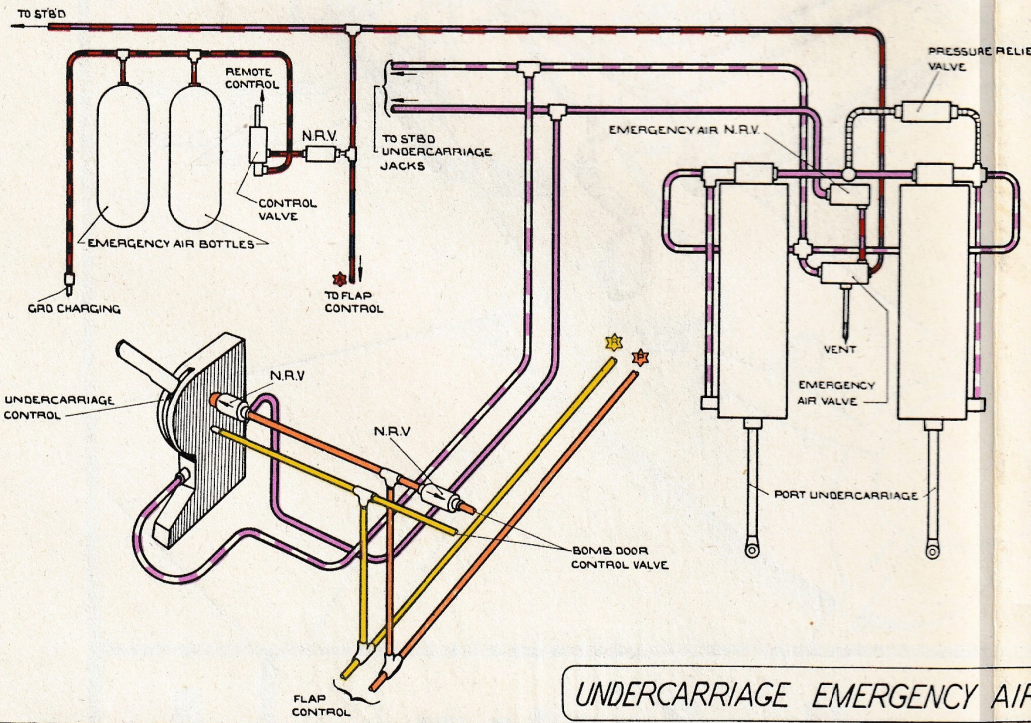

UNDERCARRIAGE EMERGENCY AIR

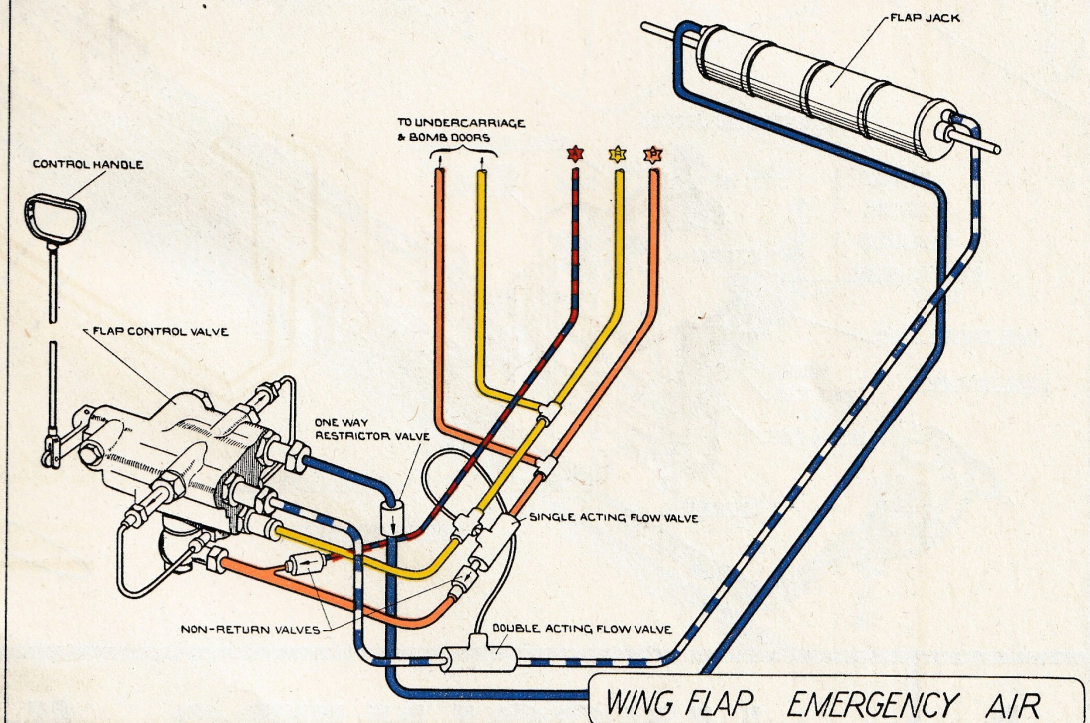

WING FLAP EMERGENCY AIR

2 LINCOLN MK 30 *Hydraulic System* 2

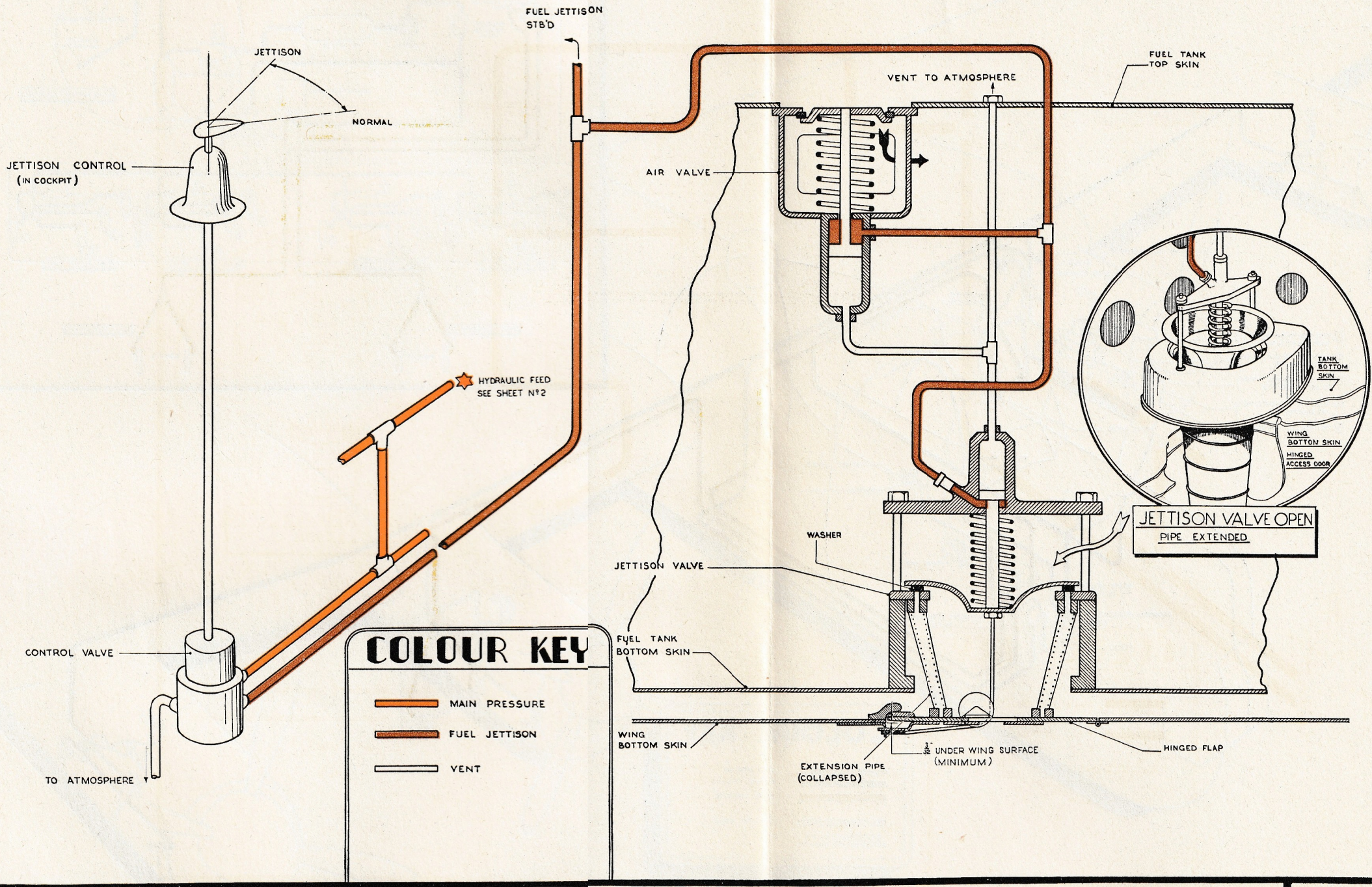
FUEL JETTISON STB'D
JETTISON
NORMAL
JETTISON CONTROL (IN COCKPIT)
HYDRAULIC FEED SEE SHEET Nº2
CONTROL VALVE
TO ATMOSPHERE
VENT TO ATMOSPHERE
FUEL TANK TOP SKIN
AIR VALVE
TANK BOTTOM SKIN
WING BOTTOM SKIN
HINGED ACCESS DOOR
JETTISON VALVE OPEN
PIPE EXTENDED
WASHER
JETTISON VALVE
FUEL TANK BOTTOM SKIN
WING BOTTOM SKIN
EXTENSION PIPE (COLLAPSED)
1/32" UNDER WING SURFACE (MINIMUM)
HINGED FLAP
COLOUR KEY
MAIN PRESSURE
FUEL JETTISON
VENT

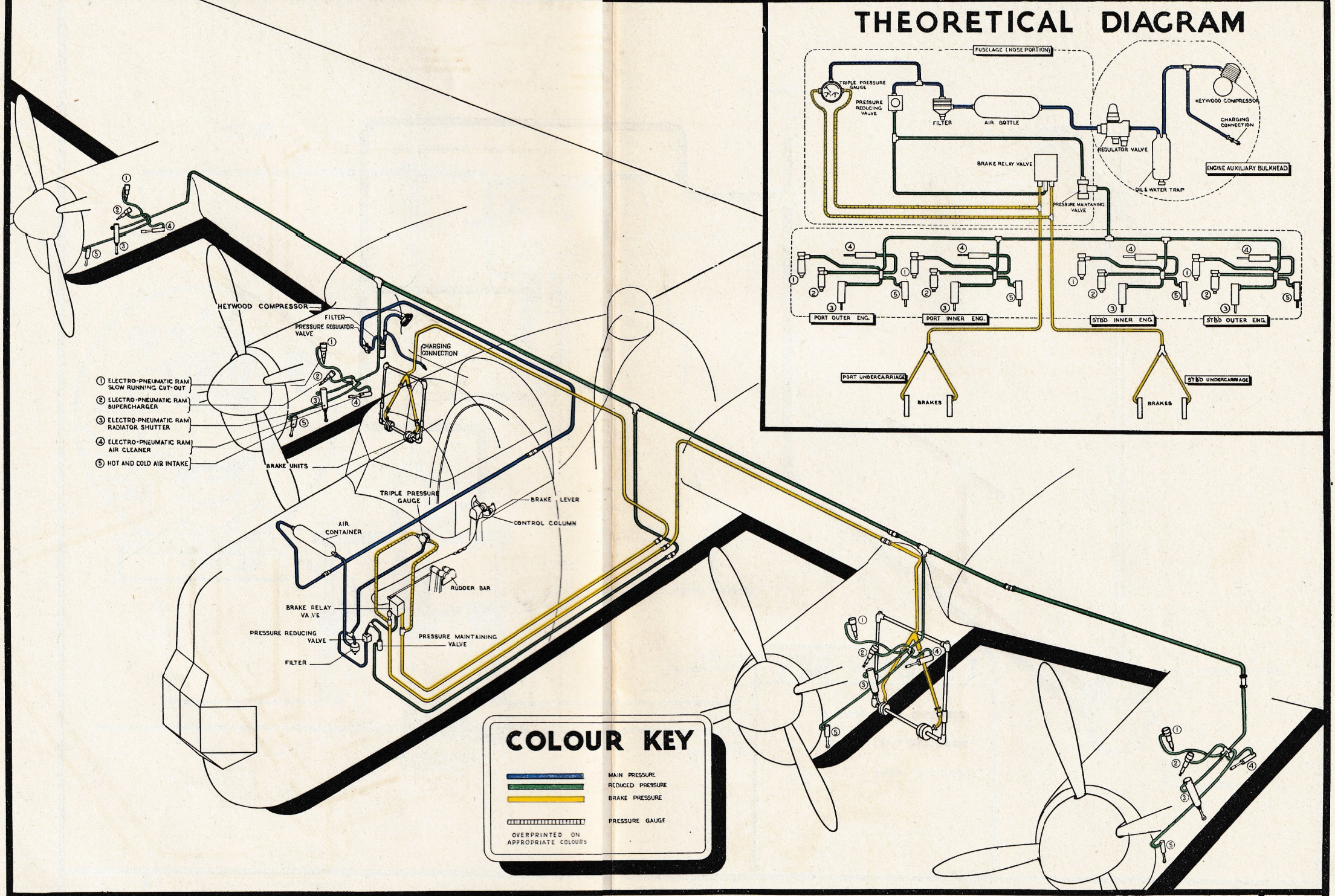
HEYWOOD COMPRESSOR
FILTER
PRESSURE REGULATOR VALVE
CHARGING CONNECTION
① ELECTRO-PNEUMATIC RAM SLOW RUNNING CUT-OUT
② ELECTRO-PNEUMATIC RAM SUPERCHARGER
③ ELECTRO-PNEUMATIC RAM RADIATOR SHUTTER
④ ELECTRO-PNEUMATIC RAM AIR CLEANER
⑤ HOT AND COLD AIR INTAKE
BRAKE UNITS
TRIPLE PRESSURE GAUGE
BRAKE LEVER
CONTROL COLUMN
AIR CONTAINER
RUDDER BAR
BRAKE RELAY VALVE
PRESSURE REDUCING VALVE
PRESSURE MAINTAINING VALVE
FILTER
COLOUR KEY
MAIN PRESSURE
REDUCED PRESSURE
BRAKE PRESSURE
PRESSURE GAUGE
OVERPRINTED ON APPROPRIATE COLOURS
THEORETICAL DIAGRAM
FUSELAGE (NOSE PORTION)
TRIPLE PRESSURE GAUGE
PRESSURE REDUCING VALVE
FILTER
AIR BOTTLE
HEYWOOD COMPRESSOR
CHARGING CONNECTION
REGULATOR VALVE
ENGINE AUXILIARY BULKHEAD
OIL & WATER TRAP
BRAKE RELAY VALVE
PRESSURE MAINTAINING VALVE
PORT OUTER ENG.
PORT INNER ENG.
STBD INNER ENG.
STBD OUTER ENG.
PORT UNDERCARRIAGE
STBD UNDERCARRIAGE
BRAKES
BRAKES

Section 10

Electrical & Radio Installation

CHAPTER 1. ELECTRICAL INSTALLATION
CHAPTER 2. RADIO INSTALLATION

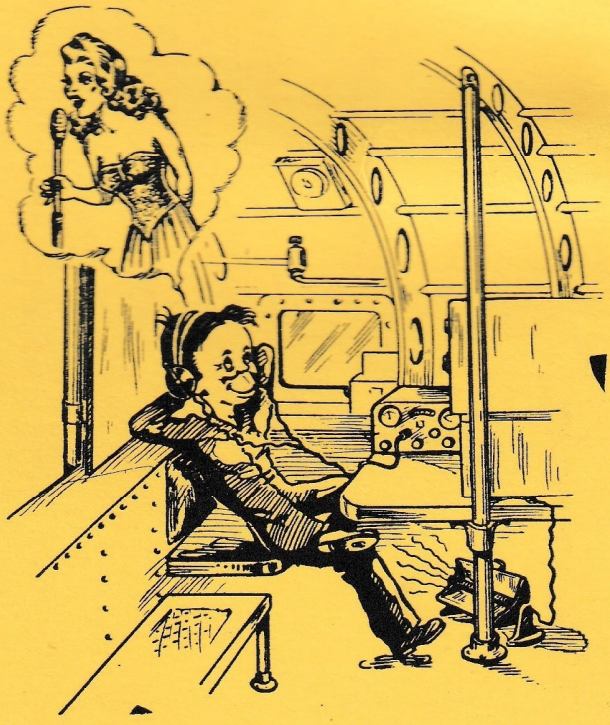

SECTION 10 — CHAPTER 1

Electrical Installation

CONTENTS

	Para.
INTRODUCTION	1
GENERAL	2
SERVICES —	
D.C. power supply and distribution ...	3
Engine starting	10
Ignition and booster coils...	11
Propeller feathering	12
Fire extinguisher (lamps)	14
Fire extinguisher (bottles)	15
Radiator flaps	16
Slow-running cut-off	17
Air cleaner control	18
Hot and cold air intake	20
Engine priming	21
Supercharger control	22
Oil pressure indicator	23
Fuel pressure warning	24
Fuel flowmeter	25
Fuel pumps	26
Fuel pumps (long-range tanks)	27
Fuel contents gauges	28
Fuel contents gauges (long-range tanks)	29
Radiator temperature gauges	30
Oil temperature gauges	31
Undercarriage indicator	32
Flap indicator	33
Engine speed indicator	34
Interior lamps	35
Exterior lamps	36
Call lamps	42
Heated pressure head	43
Camera supply and heating	44
Heated clothing	45
Scanner heater units	46
Dinghy release	47
L.T. and H.T. supplies	48
Radio supplies and demolition	49
D.R. compass and bomb sights	50
Automatic pilot	52
A.M.U., A.P.I. and G.P.I.	53
Turret supplies	54
Bomb fuzing and release	58
Flare chute	60

Electrical Installation

Introduction

1. This section gives a description of items of electrical equipment and of the installation generally. Routing charts, location diagrams and notes on servicing are given in Section 6, Chapter 1.

General

2. The installation consists primarily of panels, distribution boxes and junction boxes. The wiring between each of the boxes or panels is covered with polyvinal sheathing constituting a conduit; attached to each end are Breeze sockets which fit into plugs built in the junction or distribution box. Multi-pole plugs and sockets are so designed as to prevent incorrect mating, thus preventing either cross-connection or short circuit. To ensure good installation and to exclude dampness the wiring between 1DB and 2DB has been enclosed in a trough. The number of plug and socket connections has been reduced to a minimum. A single-pole earth return system is employed, the negatives being connected to the airframe at various points. (Section 6, Chapter 1, paragraph 11.)

SERVICES

D.C. Power Supply and Distribution

3. The D.C. power is supplied from four type P2 6 kw. shunt-wound generators (stores reference, 5U/3743) and charges four 12V. 40 amp./hr. accumulators connected in series-parallel; the negative is connected to the airframe adjacent to the accumulators. The generators are mounted on each engine gear box at the rear of the firewalls. Connected in series with each generator are suppressors, type "X" (stores reference, 5C/2100). The suppressor terminals G— are connected to earth on the unscreened or the regulator side.

4. G+ and F terminals of the suppressors are connected to terminals 1 and 3 of the voltage regulators, type 23 (stores reference, 5U/2844), which are mounted on panels 2P and 3P. Connections from terminal 4 of the regulators are made to terminals 3 of the master regulator, type 32 (stores reference, 5U/2899), and trimmer resistances for regulating the regulator voltage are utilised in place of the adjusting screw used on the carbon pile. The master regulator is set at 29 volts after all type 23 regulators have been set at 23 volts. For further information, see A.P.1095c, Vol. I, Section VI.

5. Four type J cut-outs are mounted on panels 2P and 3P, each connected in the port and starboard generator charging circuits. These cut-outs have both voltage and current coils but do not disconnect the main supply line from the generator, but complete the circuit for the "pull-in" coil of the circuit breaker to earth, through a type B switch (operated by the handle of the Ground/Flight switch) to T.B.68 in 3P. The Londex relay supplies are taken from fuses VV8 and XX1 in 3P, and fuses WW3 and WW4 in 2P. Connections for the fuses VV8 and XX1 are taken from terminal 8 of the starboard inner and outer generator circuit breakers, type D, respectively, connections for fuses WW3 and WW4 being taken respectively from terminal 8 of the port inner and outer generator circuit breakers. Connections from the four fuses are taken to terminal D1 in 1DB, and thence to the Londex relay. For further information, see A.P.1095c, Vol. I, Section VII.

6. Four type D circuit breakers (stores reference 5C/2853) are mounted on panels 2P and 3P, each circuit breaker having three pairs of contacts. The main line contacts are connected across terminals 1 and 2 and protected by a thermal strip, and, if overloaded, will trip the circuit breaker. The second pair of contacts are connected across terminals 3 and 5 and disconnected when the main line contacts are closed, thus breaking the generator power failure warning lamp circuit. The third pair of contacts are connected across terminals 4 and 7, and are also disconnected when the main line contacts are closed. When the main line contacts are tripped by the thermal strip, due to overload, the second and third pair of contacts close, the second pair completing the circuit of the

power failure warning lamps mounted on 1DB to earth terminal No. 2 in 1DB. The third pair short out a 200 ohm coil, leaving the 8 ohm coil in circuit, which constitutes the pull-in coil of the circuit breaker. When the main line contacts are closed the 200 ohm coil is no longer shorted but is brought in series with the 8 ohm coil; at the same time, there is still sufficient current passing to hold the circuit breaker once it has been pulled-in. For further information, see A.P.1095A, Section IX.

7. The generators are controlled by four field circuit breakers, four re-set push switches and an emergency switch, mounted, together with the power failure warning lamps, on 1DB panel. With the Ground/Flight switch in the Ground position, the aircraft accumulators will be isolated from the aircraft services, and the generators rendered inoperative. The emergency switch should be closed when it is necessary to run the generators without the aircraft accumulators in circuit, or should an open circuit occur in the type 15 switch in the Ground/Flight switch when in Flight position. For normal running, the emergency switch must be placed in the OFF position. When the Ground/Flight switch is in Flight position, the generators may be isolated by means of the control switches in 1DB. To shut down a generator, press the re-set push switch to open the type D circuit breaker, then open the field circuit breaker and release the push switch.

8. The Ground/Flight switch is mounted on panel 3P, and allows the aircraft services to be supplied by either aircraft or ground accumulators. The type B switch lever is mechanically linked to the handle (see paragraph 5). The following circuits are operated by the Ground/Flight switch and have no independent circuit switches:—

L.T. and H.T. supply;
Oil temperature gauges;
Radiator temperature gauges;
Oil pressure indicators;
Fuel pressure warning;
Fuel contents gauges;
Fuel contents gauges (long range);
Undercarriage indicator;
Fuel flowmeter;
Flaps indicator.

When the aircraft is grounded the switch must be placed in the GROUND position or the circuits which are not independently switched will be a constant load on the accumulator.

9. Radial feeders are connected to the +ve bus-bar in 3P, and consist of ten 45 amp. type A circuit breakers (stores reference, 5C/2564). Each circuit breaker controls a bank of fuses, and may be identified by its label, as follows:—

Circuit breaker 1D-1 feeds fuses in panel 1DB, AA1 to AA8; fuse banks BB1 to BB8.
Circuit breaker 1D-2 feeds fuses in panel 1DB, CC1 to CC8; fuse banks DD1 to DD4.
Circuit breaker 1D-3 feeds fuses in panel 1DB, DD5 to DD8; fuse banks EE1 to EE8.
Circuit breaker 1D-4 feeds fuses in panel 1DB, FF1 to FF8; fuse banks GG1 to GG4.
Circuit breaker 1D-5 feeds fuses in panel 1DB, GG5 to GG8; fuse banks HH1 to HH4.
Circuit breaker 2D-1 feeds fuses in panel 2DB, JJ1 to JJ8; fuse banks KK1 to KK8, LL1 to LL4.
Circuit breaker 2D-2 feeds fuses in panel 2DB, LL5 to LL8; fuse banks MM1 to MM8, NN1 to NN7.
Circuit breaker BA-1 feeds fuses in Air Bomber's panel, starboard; fuse banks RR1 to RR8.
Circuit breaker BA-2 feeds fuses in Air Bomber's panel, starboard; fuse banks SS1 to SS8.
Circuit breaker 3D-1 feeds fuses in panel 3DB, TT1 to TT8; fuse banks UU1 to UU8.

The circuits are protected from overload by a thermal strip in the breaker; to re-set, depress push button.

Engine Starting

10. Four engine starting push buttons mounted on the pilot's instrument panel are supplied from fuse MM1 10 amp. in 2DB. Each switch is labelled for its respective engine, and is of the double-pole type (stores reference, 5C/540). To start the selected

engine, depress the starter switch; this energises the starter and master relay coils, which closes the heavy duty contacts of the relays. The positive supply to the starter is from terminal BB on the Ground/Flight switch through the master relay to TB71B in 3P-A, to which the heavy duty relay contacts and the starter relay contacts are connected. Each starter relay coil negative is connected to earth; port outer to earth in 6P, port inner in 4P; starboard inner in 5P, starboard outer in 7P, the master relay being mounted in 3P and the coil negative earthed through TB68B. The starter motors are series wound and the negative is connected to the earth terminal on the front spar through the engine diaphragm plug and socket.

Ignition and Booster Coils

11. Four single-pole push button switches (stores reference, 5C/898) are mounted on the pilot's instrument panel. The positive supply is fed from a 10 amp. fuse KK7 in 2DB to the push button switches, each switch being labelled for the appropriate engine. The booster coils are of the B.T.H. type and are mounted on the engine diaphragm; the H.T. connections are taken to the starboard magnetos of each engine through an isolating spark gap. Each coil is independently operated and the ignition switch for the required engine must be selected with that of the booster coil switch for starting.

Propeller Feathering

12. Four 10 amp. fuses, KK1 and KK2 for port engines, MM2 and MM3 for starboard engines, provide the supply to four hydromatic feathering switches mounted on the pilot's instrument panel. For the terminal designation of this switch see Fig. 16, Section 6, Chapter 1. Pressing the feathering switches operates the master relay in 3P and the four relays operating the pump motors, which are mounted on panels 6P, port outer; 4P, port inner; 5P, starboard inner; 7P, starboard outer. The motors are series wound and the supply is provided through the same cable and master relay as the starter motors. The motor negatives are connected to earth on front spar. The master relay disconnects the supply to the nacelle relays when starter and feathering motors are not in use.

13. The corresponding propeller speed control lever must be back beyond the gate before the feathering switches are pushed. The feathering switches are retained in the closed position until the propeller is fully feathered, when the pressure builds up and opens the pressure cut-out switch and releases the button. To unfeather, ensure that the propeller speed control lever is forward of the gate, and then push the feathering button in and hold until the airscrew has returned to coarse pitch.

Fire Extinguisher (Lamps)

14. Four 5 amp. fuses in 1DB supply the circuit positive to six flame switches mounted in each engine nacelle; AA1, CC1, port inner and outer engines; DD5, FF1, starboard inner and outer engines. The flame switches of each engine are connected in parallel, ensuring that the operation of any one switch completes the circuit. Four warning lamps are mounted on the pilot's instrument panel. In the event of fire the flame switch, or switches, close automatically and complete a circuit to the appropriate warning lamp.

Fire Extinguisher (Bottles)

15. A two-bottle methyl bromide system is employed, incorporating a time delay switch in each engine nacelle and four push buttons mounted on the pilot's instrument panel beneath the fire warning lamps. When the warning lamp is operated, the appropriate extinguisher push button is depressed. The supply is then taken to the terminal block in the respective engine nacelle and then to the air intake bottle. The air intake bottle is then fired direct, the time delay switch giving a 10 seconds delay before firing the engine spray bottle. A 20 amp. fuse, JJ6 in 2DB, connects to terminal 25 of the inertia switch, mounted in the aircraft nose, which, in the event of a crash, operates both air intake and engine spray bottles of all engines simultaneously.

Radiator Flaps

16. Electrically controlled, double-acting pneumatic rams operate the radiator flaps and are controlled by thermostatic switches. Four switches are connected to four 5 amp. fuses in 1DB; fuses DD4 and BB8 operate the flaps of the port engines, GG4 and EE8 operate the

flaps of the starboard engines. The four override switches, when closed, short circuit the thermostatic switch mounted on the engine diaphragm and open the flaps. These override switches are also used for ground testing at excessively high engine speeds, and for taxying, thus reducing overheating of the engine and minimising the cooling period. A test button mounted on the engine diaphragms, which is connected in parallel with the override switches and thermostatic switches, is used for testing flap operation when the aircraft is grounded. For further information, see A.P.2861A, Vol. I, Section II.

Slow-running Cut-off

17. Slow-running cut-offs are operated by electrically controlled pneumatic rams (single acting). Each ram is operated by a switch, type 170, mounted on the pilot's instrument panel. 5 amp. fuses in 2DB feed each circuit, LL5 and LL6 starboard engines, LL1 and KK8 port engines. The pressure of the pneumatic system must exceed 160 lb. per sq. in. before it can be operated. For further information, see A.P.2861A, Vol. I, Section II.

Air Cleaner Control

18. Embodied in the carburettor air intake are filters to protect the carburettor from dust, &c., when taxying or engine testing. A master switch mounted on the pilot's instrument panel, labelled IN and OUT, operates the four cleaners, one for each carburettor; the switch should normally be in the IN position, except when testing. Two micro switches are mounted on the undercarriage UP locks and connected in series with the master switch. The positive supply to the circuit is fed from a 5 amp. fuse, MM6 in 2DB.

19. When the undercarriage is in the UP lock position the two micro switches are closed, completing the circuit of the pneumatic rams and moving the air cleaner filter to a position where it will not impede the air flow to the carburettor. For further information, see A.P.2861A, Vol. I, Section II.

Hot and Cold Air Intake

20. Electrically controlled pneumatic rams, operated by a master switch mounted on the pilot's instrument panel, enable hot air to be directed to the carburettor when icing conditions prevail. The positive supply to the switch is fed from a 5 amp. fuse, MM8 in 2DB, and connects to the master switch which operates all four engine solenoid valves. Before attempting to operate the system, the reading on the pressure gauge must exceed 160 lb. per sq. in. For further information, see A.P.2861A, Vol. I, Section II.

Engine Priming

21. Two compound wound motors, mounted one on each inboard engine firewall, supply fuel for engine priming through solenoid-operated valves. The master switch controlling the motors is mounted on the pilot's instrument panel, together with four single-pole push switches (stores reference, 5C/898) and a warning lamp. When the priming motors are switched on the warning lamp lights and, until the solenoid valve is opened, fuel will flow round the idling circuit of the pumps or through a 0.013 in. restrictor in the carburettor vent system.

Supercharger Control

22. A selector switch (stores reference, 5C/930), together with four warning lamps and test switch, are mounted on the pilot's instrument panel. The selector switch is labelled supercharger MS and automatic AUTO. In the AUTO position the circuit is controlled by an aneroid pressure switch mounted just forward of the flight engineer's panel and operating at about 12,000 ft. When closed, the two relays (single acting) mounted in panel 3P complete the circuit through two 10 amp. fuses in 3P to the solenoid rams. When the rams are operated (retracted position), the micro switches mounted on the engine frames complete the warning lamp circuit. For ground testing, a push switch will give full supercharge and light the warning lamp with the master switch in MS or AUTO position. For further information, see A.P.2861A, Vol. I, Section II.

Oil Pressure Indicator

23. This provides a means of indicating to the pilot the pressure at which the oil is being supplied to the engine without the necessity of running a branch pipe from the oil system to the pilot's instrument panel. Four Desynn type indicators are mounted on the pilot's

instrument panel, with four standard Desynn type transmitters operated by the engine oil pressure. The circuit is controlled by the Ground/Flight switch. Four 5 amp. fuses in 1DB feed the supply to terminal 6 of each transmitter, BB1, CC6 for port engines, FF5 and EE2 starboard engines.

Fuel Pressure Warning

24. Four fuel pressure warning lamps mounted on the flight engineer's panel give warning if the fuel pressure to the carburettor falls below a pre-determined value. Four resistance units, mounted on panels 6P, 4P, 5P and 7P respectively, prevent a dead short to earth should the warning lamp be short circuited when the pressure switch is closed. The switch is located in the fuel line between the engine-driven fuel pumps and the carburettor. The circuit is controlled by the Ground/Flight switch. The positive supply is fed from the same fuses as the oil pressure indicator circuit (see paragraph 23). For further information, see A.P.1275A, Vol. I, Section I.

Fuel Flowmeter

25. Two dual-dial fuel flowmeter indicators are mounted on the flight engineer's panel, each dial calibrated in gallons and $^1/_{10}$ gallons gone. Cams, operating switch units, are mounted on the engine sub-frame adjacent to the firewall, and connect direct to the appropriate meter through a type P suppressor. The positive supply is taken from four 5 amp. fuses in 1DB, AA2, CC2 port engines, DD6, FF2 starboard engines, which are connected to the cam-operated switch. The circuit is controlled by the Ground/Flight switch. For further information, see A.P.1275A, Vol. I, Section III.

Fuel Pumps

26. Four single-pole switches (stores reference, 5C/543), together with four test push switches (stores reference, 5C/540) and a test ammeter, are mounted on the flight engineer's panel. The current consumption of each pump (4-7 amps. for normal running) can be checked by operating the test switches. The fuel pumps are fitted to the collector boxes, two to each box in the port and starboard inboard nacelles. For further information, see A.P.2241, Vol. I, Section III.

Fuel Pumps (Long-range Tanks)

27. Two type B switches (stores reference, 5C/543) and a test switch to measure the current consumption by means of the test ammeter (see paragraph 26), are mounted on the flight engineer's panel. These switches control two fuel pumps, one on each of the long-range fuel tanks, which can be fitted when required in the bomb bay.

Fuel Contents Gauges

28. Six Desynn type indicators mounted on the flight engineer's panel measure the amount of fuel of Nos. 1, 2 and 3 tanks, port, and Nos. 1, 2 and 3 tanks, starboard. A float arm in each tank operates the transmitter, which is connected to its respective indicator. Two 5 amp. fuses, FF6 and AA8 in 1DB, protect the circuits and are connected to terminal 4 of each indicator. The circuit is controlled by the Ground/Flight switch. For further information, see A.P.1275A, Vol. I, Section III.

Fuel Contents Gauges (Long-range Tanks)

29. Indicator and transmitter circuits for long-range tanks are similar to those for the main tanks (see paragraph 28).

Radiator Temperature Gauges

30. Four Mk. II electrical indicators mounted on the flight engineer's panel register radiator temperature, and are coupled to resistance bulbs on the appropriate engine outlet. The positive supply is from four 5 amp. fuses in 1DB, AA7 and CC3 for port engines, DD7 and GG3 for starboard engines. The circuit is controlled by the Ground/Flight switch. For further information, see A.P.1275A, Vol. I, Section IV.

Oil Temperature Gauges

31. Remarks on radiator temperature gauges are applicable to oil temperature gauges, except that the resistance bulbs are inserted in the engine oil pipe lines. Four 5 amp. fuses in 1DB, AA4 and CC5 port engines, DD8 and FF4 starboard engines, supply the positive feed to the indicators.

Undercarriage Indicator

32. An indicator mounted on the pilot's instrument panel provides UP (red) and DOWN (green) lamps operated by micro switches mounted on the undercarriage legs and UP locks. A warning horn, with a test

button and lamp, is mounted on the port side cockpit rail just rear of the pilot to give audible warning of the undercarriage position. Two micro switches connected in parallel are operated by the two inboard engine throttle levers (when more than two-thirds closed). When the undercarriage is UP and LOCKED, all lights on the indicator are extinguished, the circuit being broken by terminals A and C of the UP lock micro switches. Terminals A, B and E of the DOWN lock micro switches are made with the undercarriage UP and UNLOCKED. Terminals A and B are made on the UP lock switches, completing the circuit for the red warning lamps. With the undercarriage in the DOWN position and LOCKED position, terminals A, B and E on the DOWN lock micro switches are broken, and A, C and D are made, completing the circuit to the green warning lamps. The test switch is used when the undercarriage is in the locked DOWN position and operates the warning horn and lamp. The positive terminal on the indicator is connected to earth at TB47B, and a 10 amp. fuse, AA6 in 1DB, supplies the positive to the DOWN lock micro switches. The circuit is controlled by the Ground/Flight switch.

Flap Indicator

33. A three-phase connected indicator is mounted on the pilot's instrument panel, with the transmitter mounted on the port inboard trailing edge. The transmitter is controlled by a rod connected to the flap. The positive supply is from a 5 amp. fuse, HH3 in 1DB, and connects to terminal 6 of the transmitter. The circuit is controlled by the Ground/Flight switch. For further information, see A.P.1275A, Vol. I, Section I.

Engine Speed Indicator

34. Four self-starting, synchronous motors mounted on the pilot's panel, with the indicators calibrated, REVOLUTIONS PER MINUTE, provide continuous indication of the engine speed. A three-phase A.C. generator is driven by each engine, the installation being self-contained, with three wires connecting the star windings of the transmitter to the indicator. For further information, see A.P.1275A, Vol. I, Section I.

Interior Lamps

35. Lamps are mounted at various stations in the aircraft fuselage, and are of dimmer controlled and on-off type. The following list gives the position and duty of the lamps:—

Lamp	*Position*	*Duty*
Supplied from fuse SS2:		
1. Cabin lamp	Rear of front turret	Illuminating the nose.
2. Cockpit lamp and dimmer	Adjacent to bomb sight	Illuminating the bomb sight.
3. Cockpit lamp and dimmer	Air bomber's panel, starboard	Illuminating panel, starboard.
4. Cockpit lamp and dimmer	Air bomber's panel	Illuminating air bomber's panel.
Supplied from fuses MM7 and KK6:		
1. U/V. and red panel lamps	Instrument panel cowl	Illuminating pilot's instrument panel.
2. Compass lamp and dimmer	Adjacent to P4 compass	Illuminating compass.
3. Compass lamp and dimmer	Adjacent to D.R. compass repeater	Illuminating D.R. compass repeater.
Supplied from fuse EE1:		
1. Cockpit lamps and dimmers	Flight engineer's panel	To illuminate flight engineer's panel.
2. Cockpit lamps and dimmers	Navigator's panel	To illuminate navigator's panel.
3. Angle poise lamp & dimmer	Navigator's panel	To illuminate chartboard.
Supplied from fuse GG6:		
1. Cockpit lamp and dimmer	Roof near D.F. loop	To illuminate D.F. loop.
2. Cockpit lamp and dimmer	Roof near 1DB	To illuminate 1DB.
3. Cockpit lamps and dimmers	Roof port and starboard of former 6	To illuminate wireless operator's table.
Supplied from fuse TT1:		
1. Cabin lamp	Roof at centre section between formers 8 and 9	To illuminate centre section.
2. Cabin lamp	Roof of rear centre section between formers 15 and 16	To illuminate rear centre section.
3. Cabin lamp	Port side, between former 22C and 22D	To illuminate rear centre section at scanner.
4. Cabin lamp	Port side of roof between formers 29 and 30	To illuminate rear section (switch operated by fuselage door).

Exterior Lamps

36. The external lamps master switch, mounted on the pilot's panel, together with the warning lamp, must first be placed in the ON position to operate resin, identification, navigation, glider tug, head lamp and landing lamps. The red warning lamp will provide visual warning to the pilot that external lamps are ON.

37. The landing lamps selector switch, mounted on the pilot's instrument panel, selects OFF, LOW and HIGH for the landing lamp, type J, mounted at the rear of the front spar on the port main plane, rib 14B. For further information, see A.P. 1095A, Vol. I, Section VIII.

38. The identification switch box (stores reference, 5C/372) on the pilot's instrument panel controls the lamps through a colour selector switch, also on the instrument panel. The three identification lamps, red, green and amber, are located on the underside of the fuselage. The identification switch also provides morse for the head lamp.

39. The navigation lamps selector switch on the pilot's instrument panel provides for OFF, DIM and BRIGHT for the navigation lamps. When the switch is in the DIM position, a resistance is inserted into the lamp circuit and so reduces the brilliance of the lamps.

40. The resin lamps are controlled by two switches, one on-off type and a colour selector switch for either red, green or clear for port and starboard lamps. The glider tug lamp at the rear of the aircraft is controlled by an on-off switch from the same fuse.

41. The main 20 amp. fuse, KK5 in 2DB, feeds through the external lights master switch to four 5 amp. fuses and one 20 amp. fuse, which in turn supply the following circuits: PP1 supplies glider tug and resin lamps, PP2 identification and head lamps, PP3 navigation and head lamp, PP4 landing lamp (motor), NN8 landing lamp (filament).

Call Lamps

42. Call lamps are situated at the following stations:—

Air bomber's port panel;
Pilot's auxiliary panel;
Navigator's panel;
W/T. panel;
Under defence station;
Dorsal turret;
Tail turret;
Elsan station.

All lamps will light if the button of any unit is pressed.

Heated Pressure Head

43. An electrically-heated head, Mk. VIIIB or Mk. VIIIH, is mounted on the port longeron and is operated by a switch on the flight engineer's panel. The test ammeter on the flight engineer's panel is used for checking the current consumption by pressing the test button provided. Pressure head current, 4 amps.

Camera Supply and Heating

44. An F.24 camera is mounted on the port side immediately in front of the forward bomb compartment bulkhead; it is operated by a control panel mounted on the forward end of the air bomber's panel, port. A warning lamp, mounted on the pilot's instrument panel and connected to the camera control, provides indication to the pilot when the camera is in operation. This installation is mainly connected with the flare chute (see paragraph 60). A 10 amp. fuse, RR5, in the air bomber's panel, starboard, supplies the camera heaters through a type B switch mounted on the air bomber's panel, port; the heater sockets are mounted on a panel on the port side of the fuselage forward of the camera, and the camera muffs are plugged at these points.

Heated Clothing

45. Provision is made for heating the air bomber's suit by a 3-pole socket on a trailing lead on the air bomber's panel, port. Mounted on the air bomber's panel, starboard, are two type B switches, one for hands and feet and the other for body; these are connected in parallel with the supply from a 10 amp. fuse, SS3, which is also mounted on the panel and is connected to the body switch.

Scanner Heater Units

46. Three heating elements situated inside on the wall of the scanner platform are controlled by a type B switch on the port side of

the fuselage at the scanner position. The positive supply is fed from a 20 amp. fuse, TT5 in 3DB, and the negative is connected to a common earth point at the same panel.

Dinghy Release

47. The dinghy is situated in the starboard centre section trailing edge of the main plane, to which a connection is made by a 3-pole plug and socket. Pin E is positive and pins L and N are connected together to the common negative bus in 5P. The dinghy is controlled by an immersion switch situated in the nose of the aircraft and receives supply from a 20 amp. fuse, SS4, in the air bomber's panel, starboard.

L.T. and H.T. Supplies

48. The general purpose sets, T.1154 and R.1155, supplies are provided by L.T. and H.T. converter units situated beneath the navigator's table on the floor. The L.T. converter unit is interconnected with a resistance unit at TB106, from which the positive supply connects to a 20 amp. fuse, GG1 in 1DB. The amount of resistance to operate the converter is controlled by the Londex relay situated near the converters. The supply to the relay coil is fed from terminal D1 in 1DB, which is a common point for the W/T. connections from the generator circuit breakers on 2P and 3P. The H.T. converter supply is fed direct from a 60 amp., type L, fuse, GG2 in 1DB. The earth connection from the relay is made at a common point with the L.T. and H.T. converters' earth through TB106 and TB107 to the aircraft structure adjacent to the converters. The circuit is controlled by the Ground/Flight switch. For further information, see A.P.-1186D, Vol. I.

Radio Supplies and Demolition

49. The I.F.F. set is provided with a demolition charge. This charge can be detonated direct by means of double push buttons mounted in each of the pilot's, navigator's and wireless operator's positions. Also on the navigator's panel is mounted a Safe/Fire switch, type B, and two warning lamps connected in parallel. An inertia switch is mounted in the nose on the starboard side of the fuselage, and when the inertia switch is operated, the warning lamps will light and fire the detonator when the Safe/Fire switch is in the Fire position. In the Safe position the warning lamps will light to show the circuit operates without firing the detonator. The supply to the pilot's and navigator's positions is through a 20 amp. fuse, GG7, and to the wireless operator's position through a 20 amp. fuse, AA5, both in 1DB. To prevent failure if one circuit is disrupted, duplicate wiring is provided. Supplies are taken through a 10 amp. fuse, FF8, to the TR.1196 2-pole socket, on crate at former 13; through 20 amp. fuse, EE4, to the R.3090 3-pole socket on former 5; and through 20 amp. fuse, GG5, to the 2-pole radar socket on connector 127 above navigator's panel.

D.R. Compass and Bomb Sights

50. The master compass is mounted on the starboard side of the fuselage forward of the main entrance door, and is plugged into the compass junction box on the aft side of the transport joint at former 27. The transport joints of cables are formed by double-ended plugs and sockets at formers 6 and 12 and at former E. The supply is from panel 1DB, 10 amp. fuse AA3, through a type B suppressor to a distribution box, type D, both mounted aft of the panel, 1DB. The variation setting corrector is located in the fuselage roof at the navigator's station between formers 2 and 3. A 3-way junction box, type A, in the cable to the pilot's repeater, is mounted on the starboard side of the fuselage near the forward end of the main floor, and from the main distributor box connections are run to a 5-way junction box, type A, below the air bomber's starboard panel, making provision for bomb sight attachment.

51. A mounting is provided in the front of the fuselage nose for either of the two bomb sights—Mk. XIV or Mk. III low-level. When the Mk. XIV bomb sight is fitted it is controlled by a control panel (stores reference, 5C/2799) situated forward of the air bomber's seat. Positive supply is from fuse SS1, 5 amp., in the air bomber's starboard panel, to the control panel. Used in connection with this bomb sight is a computor which is situated on the port side in front of the auto pilot panel. A cable from the computor connects to a 5-way junction box, type A,

and D.R. compass wiring, then through to a 3-way junction box, type A, on the air bomber's panel. The Mk. III bomb sight is fed from a 3-way junction box, type A, and the supply to this junction box is from fuse RR6, 5 amp., in the air bomber's starboard panel, through a suppressor, type P. When a Mk. III bomb sight is fitted it is controlled by a control panel, type E (stores reference, 5C/2486), situated in place of the Mk. XIV switch box forward of the bomb aimer's seat.

Automatic Pilot

52. The positive supply to the Mk. VIII auto pilot is provided from a 5 amp. fuse, JJ4 in 2DB, and connection is made to a type B rotary switch mounted on the pilot's instrument panel, giving positions OFF, COURSE and JINK. The wiring from the relay box is taken through a suppressor, type F2, also on the panel, to interconnect at TB35 with pilot's repeater of the D.R. compass installation. For further information, see A.P.1469C, Vol. I.

A.M.U., A.P.I. and G.P.I.

53. The supply to the A.M.U. is fed from a 5 amp. fuse, BB4 in 1DB, through suppressor, type P, situated at the navigator's position, and the negative is connected to earth on TB43 on the panel. The ground position indicator and air mileage unit are interconnected to the air position indicator, all of which are located at the navigator's station. A further connection is then taken to the D.R. compass. For further information, see A.P.1275B, Vol. I.

54. Supply to the front turret (Boulton Paul, type F) is controlled by a type B circuit breaker mounted in panel 3P. This circuit breaker is operated by STOP and START switches which, together with an economy resistance for the circuit breaker coil, are mounted in the air bomber's panel, starboard. For further information, see A.P.2796H, Vol. I.

55. At the dorsal position, Bristol B17 turret is fitted. Supply and intercommunication connections to the turret being made by means of three plugs and sockets mounted on a panel on the port side of the fuselage at the turret position (see Section 6, Chapter 2). The supply to the dorsal turret is controlled by another type B circuit breaker, mounted on panel 3P. This circuit breaker is operated through a 5 amp. fuse, VV4 on panel 3P, by STOP and START switches which, together with an economy resistance for the circuit breaker coil, are mounted on the turret control panel on the port side of the fuselage at the turret position. On this panel is also connected a type B switch, which was originally provided for fitment of Glenn Martin turrets. This switch should be open for B17 turrets. For further information on turrets, see A.P.2768E, Vol. I, and T.O. 11-45-BB-1, dated 14th August, 1945.

56. The under defence gun is installed when the scanner installation is not fitted. The gun firing solenoid, gun firing button or reflector sight are all connected through a plug and socket to the under defence gun control panel, which is mounted on the starboard side of the fuselage at the gun position. The electrical control on this panel consists of a type B switch, a type P relay and a 5 amp. fuse, and supply for these controls is fed from a 10 amp. fuse, TT2 in panel 3DB.

57. All connections to the rear turret (Boulton Paul, type D) are made through 14 slip-rings. The positive supplies are taken from type A circuit breakers on panels 2P and 3P to TBs. 117 and 119, and are connected to the turret slip-ring A; two negative leads connect to slip-ring P and are connected to earth at the terminal block panel. Two ammunition assister panels are mounted one on each track at formers 33 and 34, and these are automatically controlled by micro switches and the gun firing relay in the turret. The equipment on each panel consists of a type P relay, assister motor, micro switch and a 25 amp. fuse, the relays in each case being controlled by a micro switch mounted in the ammunition tracks. The supply is taken from the turret supply circuit breaker in 3P through TB117, fitted on former 39, port side. The relays for the assister motors are controlled by the firing button in the turret through slip-ring N. A supply, taken from fuse TT3, 5 amps., in 3DB, through TB95 in 8P, and a push button switch on former 41, connects to slip-ring N for casualty evacuation solenoid. For further information, see A.P.2796J, Vol. I.

Bomb Fuzing and Release

58. The following units are mounted on the air bomber's starboard panel: Automatic distributor, type 6 (16-point); selector switchbox, type F; three switchboxes, type B, and interlock unit and a main supply fuse box (40 amp. fuse); a 2-pole flat socket for the plug on the bomb sight; and two 6-pole plugs for bombs-and-day camera or bombs-and-night camera, as required. The firing switch is locked in the interlock switch when not in use, and cannot be removed until nose or tail fuzing has been selected. From the bank of fuses mounted on the panel, supplies are taken for nose and tail fuzing from RR1 and RR2 (20 amp.), distributor heating from RR3 (5 amp.) and heavy bomb slip heaters from RR4 (5 amp.). A switchbox, type E, is also mounted on the panel to control the supply to the heavy bomb slip heaters. A firing switch is incorporated on the left-hand side of the pilot's control column (hand wheel). The supply to the switch is broken at TB177, which is mounted at the base of the control column, and a further supply is taken to a plug and socket at the navigator's table for a bomb switch which is used in connection with radar equipment. A jettison switch, type H, and a jettison pull handle for operating the selector box jettison bars, are mounted on the starboard side of the pilot's instrument panel.

59. There is only one junction box in the bomb fuzing and release gear, and this is referenced JBA and situated at the front end of the bomb compartment. Fifteen plug and socket outlets from the junction box connect to each of the bomb positions. The release positive terminals in the junction box are referenced with the number of the bomb position to which they connect, and these numbers are also referenced to the respective number of the switches of the selector switchbox and pre-selector switch unit. To prevent the release of bombs when the bomb doors are closed, two push switches are provided in the positive supply. They are mounted on the rear face of the bulkhead at the front end of the bomb compartment and remain in the OFF position while the bomb doors are closed. For further information on bomb fuzing and release equipment, see A.P.1095B, Vol. I, Section III.

Flare Chute

60. A Mk. III twin-cell flare chute is mounted in the rear of the aircraft, aft of the under gun station cupola. A micro switch operated by the bomb door lever controls the reversible motor in the flare chute which raises or lowers a deflector plate. Micro switches are provided in the chute at the UP and DOWN positions to limit the travel of the deflector plate. When the deflector plate is in the DOWN position, the DOWN micro limit switch completes the circuit, so that when the air bomber's firing switch (in bombs-and-night camera plug) is operated, a flash is released at the same time as the bomb is dropped. A lanyard micro switch is mounted in the flare chute and is operated by the flare when released, completing the circuit to the camera in night bombing. With the air bomber's firing switch in the bombs-and-day camera plug, when the switch is depressed the supply is taken direct to the camera at the same time as the bombs are released.

SECTION 10 — CHAPTER 2

Radio Installation

CONTENTS

	Para.
GENERAL —	
POWER SUPPLY	1
L.T. AND H.T. SUPPLIES	2
A.C. SUPPLY	3
T.1154 — R.1155	4
INTERCOMMUNICATION	5
TR.5043	6
TR.1196	7
AERIAL SYSTEM	8

ILLUSTRATIONS

	Fig.
Radio and Radar equipment	1
Wiring diagram T.1154, R.1155, TR.1196, A.1134A amplifier and TR.5043	2
Intercommunication diagram	3

Radio Installation

General

The W/T. operator's station in the aircraft is at the aft end of the navigator's table, facing forward. Most of the radio equipment is mounted in front of the operator, on or below the navigator's table as shown in Fig. 1. Facing the operator are the T.1154 transmitter, R.1155 receiver, aerial switch, indicator unit type 182 (Fishpond), indicator unit type 217 (AGLT) and A.1134A i/c. amplifier. Adjacent to the operator's seat are mounted control units types 80 and 90, the visual indicator for R.1155 and the Mic-Tel distribution panel. Adjacent to the operator's table are mounted the trailing aerial, aerial winch and lead-in, a spare aerial reel being located beneath the operator's seat, and a valve stowage for T.1154-R.1155 being located beneath the front spar step. Mounted beneath the navigator's table are a Londex relay, resistance unit, L.T. and H.T. power units and a 2-volt accumulator for T.1154-R.1155, the radar supply plug board, ARI.5267 receiver and power unit for A.1134A amplifier. Above the navigator's table are mounted the ARI.5267 indicator unit type 10-6/APN4, switch unit type 226, control unit type 222A, control unit type 477, switch unit type 207B and indicator unit type 184A. A remote control unit, a "press to transmit" switch and volume control for TR.5043 are provided at the pilot's station and a "press to transmit" switch and a control unit type 468 are provided at the bomb aimer's station. Radar equipment is mounted in the rear centre section and rear section as shown in Fig. 1, and a scanner unit is installed when armament is not fitted at the under gun station.

POWER SUPPLY

1. The direct current power supply for the radio installations is taken from the aircraft accumulators through panel 1DB. Four fuses in panel 1DB, namely FF8 (10 amp.), EE4 (20 amp.), GG5 (20 amp.) and AA5 (20 amp.) supply current to TR.1196 (when fitted), R.3121, ARI.5267 and ARI.5747, and the detonator circuit of the R.3090 installation respectively.

L.T. AND H.T. SUPPLIES

2. Power for the L.T. converter unit is supplied from a 20 amp. fuse GG1 in panel 1DB through a resistance unit which is interconnected with the L.T. converter; the amount of resistance to operate the converter being controlled by the Londex relay. The supply to the relay coil is fed from terminal D1 in panel 1DB, which is a common point for the W/T. connections from the engine-driven generators circuit breakers. The supply to the H.T. converter unit is taken direct from a 60 amp. fuse GG2, in panel 1DB.

A.C. SUPPLY

3. Alternating current is supplied to radar installations from two type 4 motor-driven alternators located in the fuselage rear centre section. The D.C. supply to the driving motors of the alternators is remotely controlled from the navigator's panel by "Stop-Start" push-buttons, which in turn control two type B circuit breakers in panel 3P.

T.1154-R.1155

4. This installation is used as a general purpose communications radio and comprises the T.1154 transmitter, R.1155 receiver and A.1134A amplifier. The transmitter is used in conjunction with the receiver, which is a combined communication receiver and direction finder, provision being made for the reception of modulated and unmodulated signals, and for D/F. and homing by the incorporaton of a visual indicator. Either fixed or trailing aerials may be connected to the receiver or transmitter by means of an aerial selector switching unit. For R/T. transmission with the T.1154 installation, electro-magnetic microphones are used with the type A.1134A amplifier.

INTERCOMMUNICATION

5. Complete intercommunication is provided between all crew members by means of the A.1134A amplifier, microphone-telephone sockets being provided for the following crew stations:—

Bomb aimer, first and second pilot, navigator, W/T. operator, fire controller, mid-upper gunner, under-gun station and rear

gunner; sockets also being provided at the D.R. compass point and former 12. Provision is also made for "tug to glider" intercommunication, a cable being run and terminated at former 41 in the rear fuselage section. The navigator's Mic-Tel station may be isolated from the circuit by means of an isolation switch mounted on the navigator's panel, but if communication is required with the navigator it may be restored by use of a switch provided on the pilot's auxiliary panel. By means of a change-over switch at the W/T. station, the intercommunication Mic-Tel sockets may be used for the purpose of transmitting and receiving through the general purpose radio installation.

TR.5043

6. This installation provides two-way radio-telephone communication between aircraft in flight and between aircraft and ground stations. Operation may take place on any four crystal-controlled channels lying within the frequency range of the equipment. Remote control only is provided, the remote control unit at the pilot's station being provided with four push buttons for channel selection and an "OFF" button for stopping the equipment. Both transmitter and receiver are simultaneously switched to any one of the four pre-set crystal-controlled channels whenever the appropriate channel selector button is pressed. The "TR-REM" switch at one end of the control unit switches the apparatus to the transmit, receive, or press to transmit condition. An indicator lamp on the right side of each channel button informs the operator which channel is in use. "Press to transmit" switches for this installation are provided for the bomb-aimer, pilot and fire controller, by which any of these crew members may take control of the pre-selected band and transmit as required.

TR.1196

7. This installation is not fitted to the aircraft, but wiring and the aerial system is installed in early aircraft.

AERIAL SYSTEM

8. Seven aerial systems are provided for radio equipment (see Fig. 1). A trailing aerial reel is fitted at the W/T. operator's station on the port side of the aircraft. A general purpose fixed aerial is fitted on the starboard side of the aircraft running from the pilot's canopy to the top of the starboard fin. A corresponding aerial is fitted on the port side of the aircraft, except that this aerial is divided into two sections, the rear section serving as an aerial for TR.1196 (when fitted), the front section not being employed. Mounted on top of the fuselage inside the rear canopy is a remote controlled loop for the D/F. system. Aft of the canopy mounted to the top of the fuselage is a whip aerial serving the ARI.5083 units, and also mounted to the top of the fuselage, just forward of the mid-upper turret, is another whip aerial which serves the TR.5043 installation. A whip aerial mounted on the starboard underside of the aircraft adjacent to the main entrance door serves the R.3121 installation.

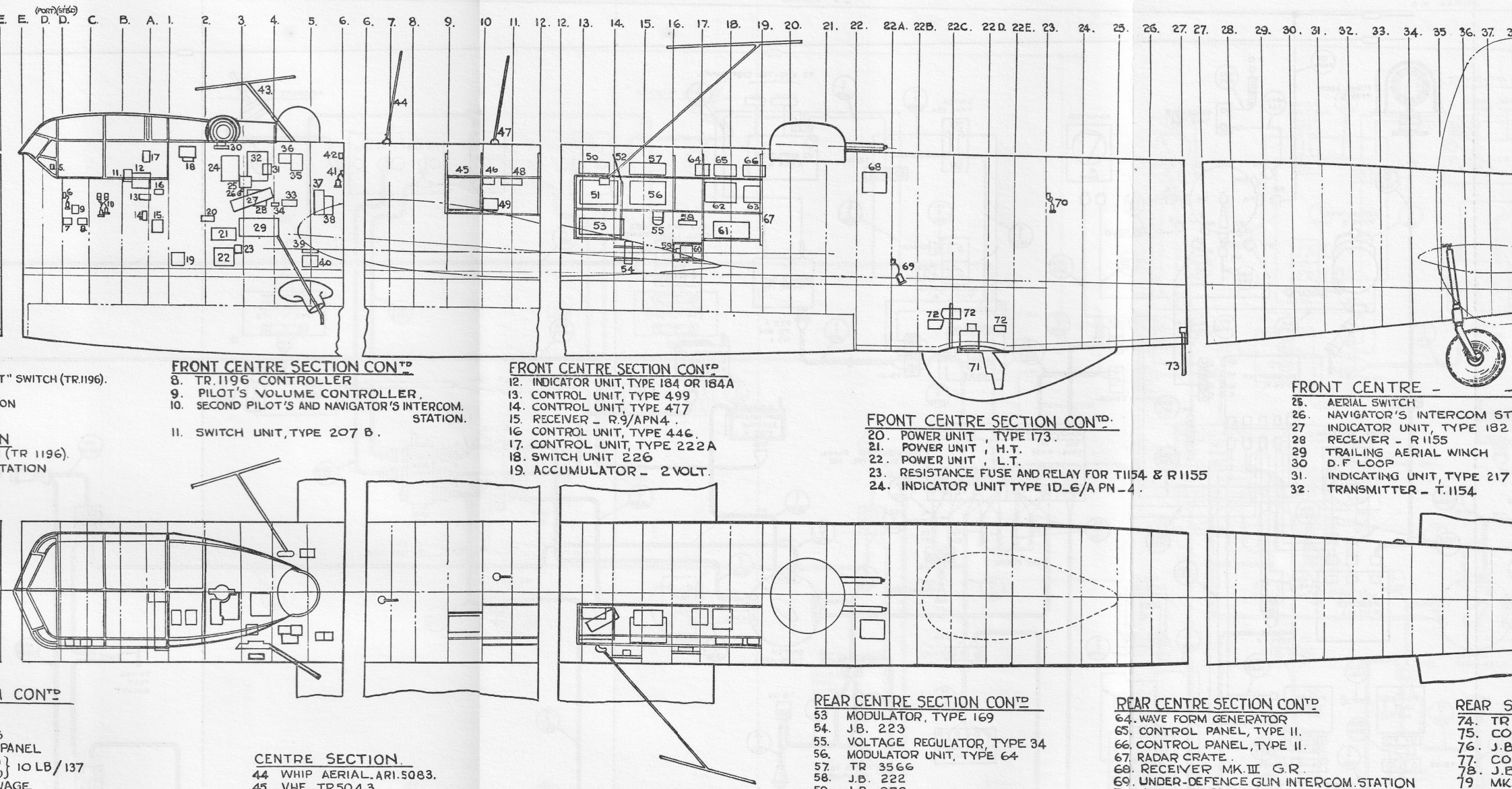

T" SWITCH (TR.1196).
ON
N
(TR 1196).
TATION

I CONTD

PANEL
} 10 LB/137
VAGE.
RCOM STATION.
S TO TRANSMIT" SWITCH - TR.1196
AL

FRONT CENTRE SECTION CONTD

8. TR.1196 CONTROLLER
9. PILOT'S VOLUME CONTROLLER.
10. SECOND PILOT'S AND NAVIGATOR'S INTERCOM. STATION.
11. SWITCH UNIT, TYPE 207 B.

FRONT CENTRE SECTION CONTD

12. INDICATOR UNIT, TYPE 184 OR 184A
13. CONTROL UNIT, TYPE 499
14. CONTROL UNIT, TYPE 477
15. RECEIVER - R.9/APN4.
16. CONTROL UNIT, TYPE 446.
17. CONTROL UNIT, TYPE 222A
18. SWITCH UNIT 226
19. ACCUMULATOR - 2 VOLT.

FRONT CENTRE SECTION CONTD.

20. POWER UNIT, TYPE 173.
21. POWER UNIT, H.T.
22. POWER UNIT, L.T.
23. RESISTANCE FUSE AND RELAY FOR T1154 & R1155
24. INDICATOR UNIT TYPE 1D-6/A PN-4.

FRONT CENTRE -

25. AERIAL SWITCH
26. NAVIGATOR'S INTERCOM ST
27. INDICATOR UNIT, TYPE 182
28. RECEIVER - R 1155
29. TRAILING AERIAL WINCH
30. D.F LOOP
31. INDICATING UNIT, TYPE 217
32. TRANSMITTER - T.1154

CENTRE SECTION.

44. WHIP AERIAL. ARI. 5083.
45. VHF TR 5043
46. J.B. 17A
47. TR 5043 AERIAL
48. SUPPRESSOR, TYPE 2
49. POWER UNIT, TYPE 36

REAR CENTRE SECTION

50. RECEIVER - R 3547
51. TR 1196
52. PORT FIXED AERIAL

REAR CENTRE SECTION CONTD

53. MODULATOR, TYPE 169
54. J.B. 223
55. VOLTAGE REGULATOR, TYPE 34
56. MODULATOR UNIT, TYPE 64
57. TR 3566
58. J.B. 222
59. J.B. 272
60. J.B. 231.
61. RECEIVER, TYPE R 3553 OR R 3554
62. POWER UNIT ARI. 5583, TYPE 280
63. AMPLIFIER, TYPE A.3562

REAR CENTRE SECTION CONTD

64. WAVE FORM GENERATOR
65. CONTROL PANEL, TYPE 11.
66. CONTROL PANEL, TYPE 11.
67. RADAR CRATE.
68. RECEIVER MK. III G.R.
69. UNDER-DEFENCE GUN INTERCOM. STATION
70. D.R. COMPASS INTERCOM. STATION
71. SCANNER.
72. SCANNER ALLIED UNITS'
73. MK. III G.R AERIAL.

REAR S

74. TR
75. CO
76. J.B
77. CO
78. J.E
79. MK.

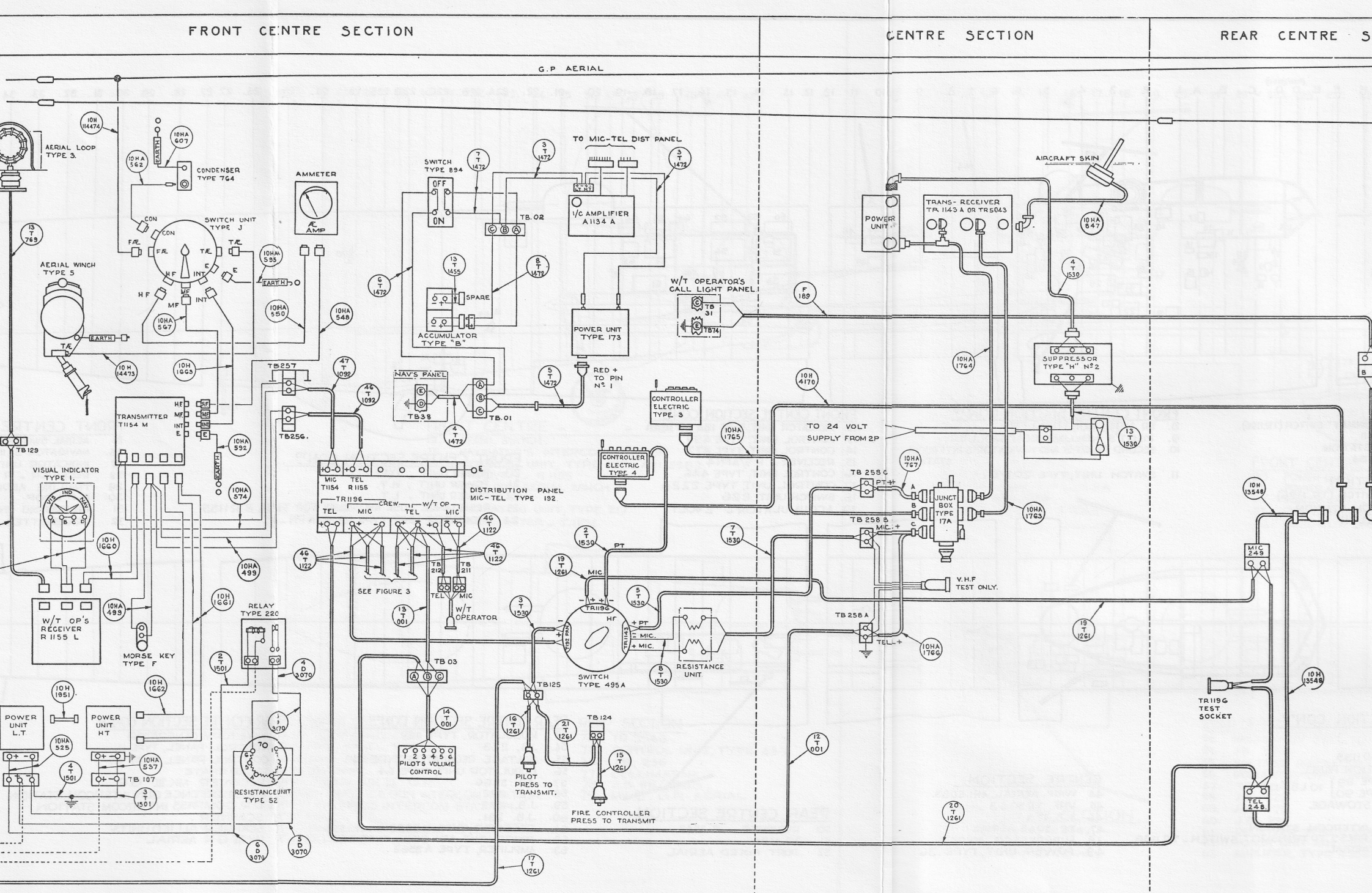

WIRING DIAGRAM T1154, R1155, TR1196, A1134A AMPLIFIER, AND TR1143

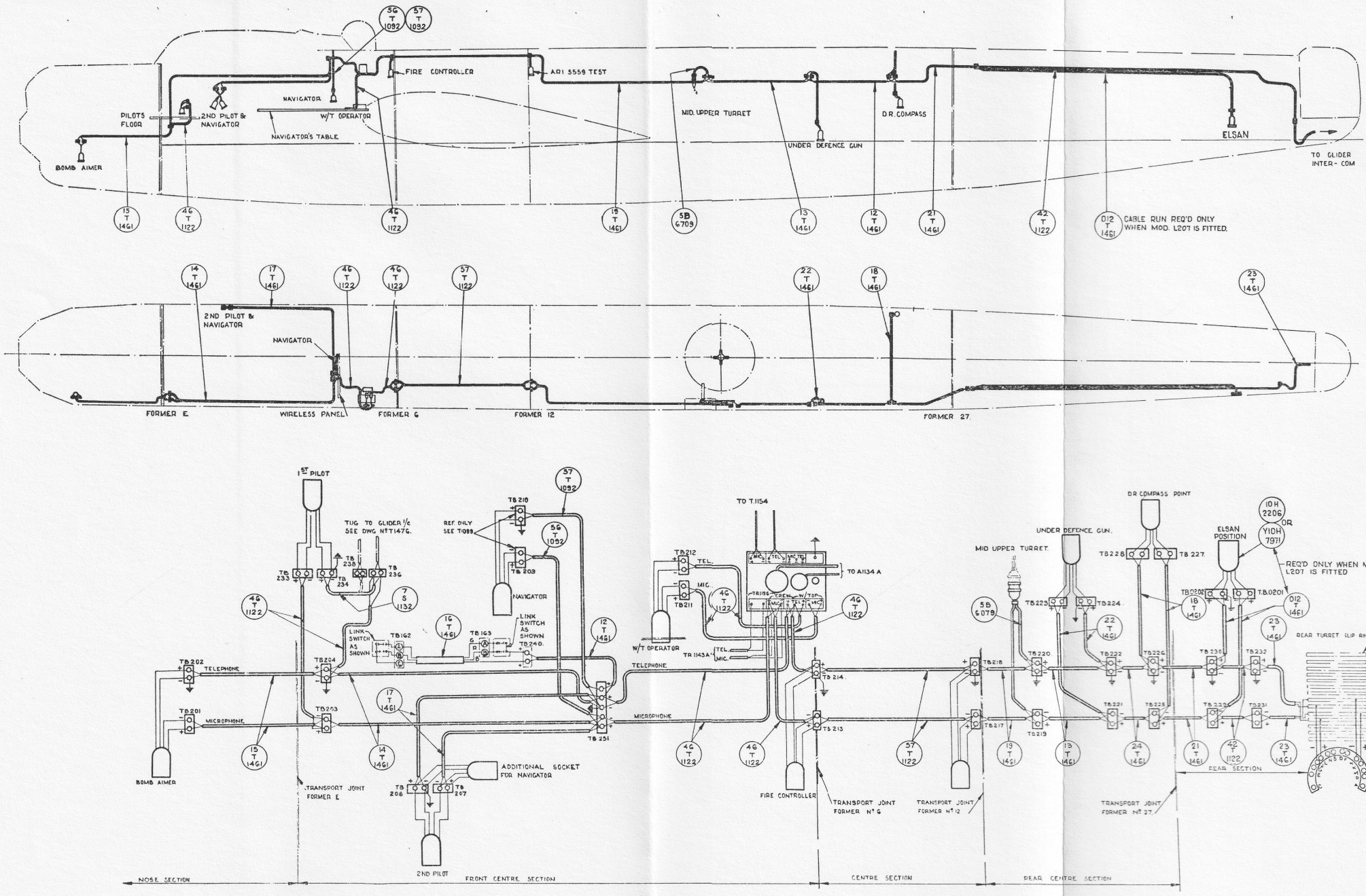

WIRING DIAGRAM — INTERCOMMUNICATION

Section 11

Equipment Installations.

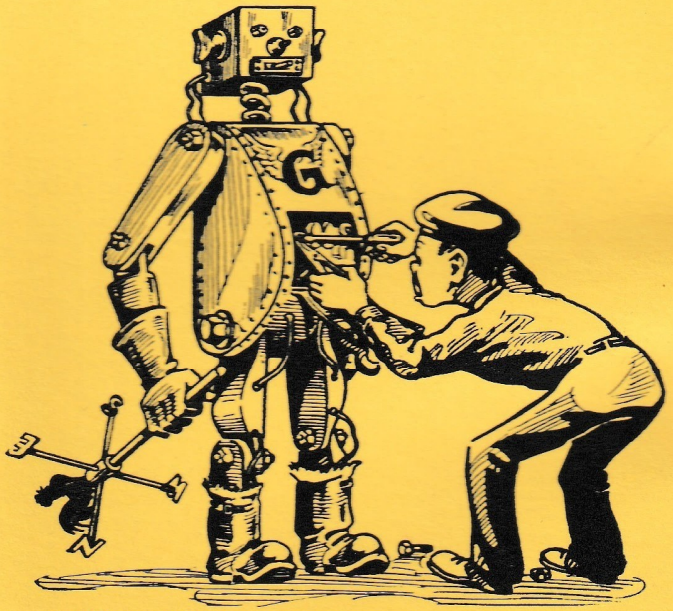

EGBERT, BEFORE DISSECTING GEORGE – THE AUTOMATIC PILOT – STUDY THE ILLUSTRATION IN THIS SECTION - FIGURE 1.

SECTION 11

Equipment Installations

CONTENTS

	Para.
AUTOMATIC PILOT	1
VACUUM SYSTEM	5
A.S.I. SYSTEM	6
CABIN HEATING SYSTEM	9
OXYGEN SUPPLY SYSTEM...	16
PHOTOGRAPHIC EQUIPMENT	19
POSITIONS OF F.24 CAMERA	22

ILLUSTRATIONS

	Fig.
Automatic pilot Mk. VIII	1
Vacuum system	2
A.S.I. system	3
Cabin heating	4
Oxygen supply system	5
Photographic equipment	6

Equipment Installations

AUTOMATIC PILOT

1. The aircraft is equipped with Mk. VIII automatic pilot (*see* Fig. 1). The aileron and elevator gyro is mounted on the port side of the fuselage nose at the rear of the air bomber's compartment. The servo motors are mounted between the pilot's floor and the main floor, the elevator servo motor on the underside of the pilot's floor and the aileron servo motor on the top of the main floor just aft of the elevator cross shaft.

2. Compressed air is supplied to the gyro unit by an "Arrow" type compressor, which is driven from the port inboard engine accessory gearbox. A reservoir mounted on the firewall supplies oil to lubricate the compressor and is also interconnected with an oil cooler on rib 1 of the port main plane leading edge.

3. The supply and return pipes pass along the front spar and the port side of the fuselage into the nose. An air drier containing silica gel, located just aft of the pilot's chair, dries the air in the supply pipe before it passes through the control cock into the gyro and servo motors. The control cock, clutch lever, air pressure gauge and pitch control are mounted on the left of the pilot's station. The air throttle is fixed on the fuselage side adjacent to the bulkhead at the rear of the air bomber's compartment. For detailed information regarding automatic pilot Mk. VIII *see* A.P.1469c, Vol. I. For setting of automatic pilot *see* Section 4, Chapter 3.

4. Air is also supplied from this system to the bomb sight computor. A second air drier which is connected to the computor, is fixed on the bulkhead at former E and a control cock is provided on the port side of the nose. For further information on the bomb sight equipment *see* Section 12, Chapter 1.

VACUUM SYSTEM

5. A vacuum system (*see* Fig. 2) is provided to operate the artificial horizon, turn indicator and direction indicator on the instrument flying panel, and is also connected to the bomb sight computor, sighting head and H2S scanner. Three pumps are used, one on the accessory gearbox of the starboard inboard engine and twin pumps on the gearbox of the port inboard engine. The pipe lines from these pumps pass through a suction relief valve, along the front spar and the starboard side of the fuselage to a change-over cock mounted on the right-hand side of the pilot's instrument panel. From the change-over cock one pipe leads to the instrument flying panel with a branch to a vacuum gauge, and a second pipe is taken to the bomb sight equipment (*see* Section 12, Chapter 1). A branch connection runs off along the starboard side of the fuselage to the H2S scanner and a test cock with an external access door is provided at former 22C. When the change-over cock is set at NORMAL, the single pump is connected to the instrument flying panel and the two pumps to the bomb sight equipment. At EMERGENCY these connections are reversed.

AIR SPEED INDICATOR SYSTEM

6. The air speed indicator system (*see* Fig. 3) consists of two pipe systems, one conveying the air pressure, caused by the movement of the aircraft, from the pressure head to the instruments, and the other connecting the instruments to two static vents.

7. The pressure head (Mk. VIII type) which is electrically heated to prevent icing, is situated externally on the port longeron of the fuselage front centre section and is connected to the air speed indicators on the pilot's and navigator's panels. The pressure head heater switch is located on the left-hand side of the flight engineer's panel. Two static vents, mounted one on each side of the fuselage rear centre section, convey static pressure to the air speed indicator, the altimeter and rate of climb meter on the pilot's panel and to the air speed indicator and altimeter on the navigator's panel. The bomb sight computor is also connected to the pressure head and to one of the static vents.

8. Drain pipes are provided at the lowest point of all descents in the pipe runs. These consist of short detachable lengths of pipe

which can be removed and shaken out. For further information on air speed indicator *see* A.P.1275B, Vol. I.

CABIN HEATING

9. Hot air is delivered from radiators connected to the inboard engine cooling systems. One radiator mounted in the leading edge of the starboard main plane and connected to the starboard inboard engine, heats the cockpit and nose by means of a perforated duct on the starboard side. The other, mounted on the starboard side of the fuselage just aft of the rear spar, is connected to the port inboard engine and delivers hot air through a duct on the starboard side to the dorsal and tail turrets and to the cupola of the H2S scanner.

10. On the forward systems, air enters a nostril in the starboard main plane leading edge and is delivered to the radiator by a short duct. When the hinged leading edge is closed the ends of the nostril and duct make contact through a sponge rubber seal. The cool air inlet duct is mounted on the radiator and one of the front spar brackets; the hot air duct leads inboard from the radiator and is bolted to a control valve box. The radiator is connected to the inboard cooling system by supply and return pipes lagged with asbestos (*see* Fig. 4).

11. The control valve box, which is a light alloy casting, bolted to the fuselage side, has two outlets, one at the inboard end to supply hot air into the fuselage, the other at the bottom, connected to the by-pass duct, by which hot air can be discharged through the louvre below the main plane leading edge. The valve consists of a shutter, operated by a worm gear control from a knob adjacent to the inlet in the cabin and arranged to close the inlet as the by-pass is opened. The passage of air through the ducts is therefore uninterrupted. Felt strips are fitted to the side edges of the shutter and felt packing in the top of the casting to form a seal. The by-pass duct is formed of upper and lower light alloy castings, the upper casting being bolted to the valve box and the lower, together with the exit louvre, attached to the bottom of the hinged leading edge. A sponge rubber seal forms the joint between the two castings.

12. A square section duct, fixed to the fuselage floor by means of brackets, leads from the control valve box into the nose. The duct is perforated along its length on the inboard side, and is open at the forward end.

13. The forward heating system is operated independently of the rear system and, in order to retain the heated air in the front cabin, two plywood doors, mounted on a central post, are provided at former 8 in the fuselage centre section. To assist the circulation of the air an adjustable extractor louvre is provided on the port side of the fuselage nose.

14. The rear heating system is similar in principle. The radiator is installed on the starboard side of the fuselage aft of the rear spar, and is connected to the cooling system of the port inboard engine by supply and return pipes, which run through the bomb compartment and outboard along the front spar (*see* Fig. 4). Control cocks are provided in the fuselage under the front spar cover.

15. The radiator is covered by a light alloy guard, which has a flanged hole in the top surface to allow access to the pet cocks. Externally, the air intake and the by-pass outlet are formed in one fairing, a short duct connecting the radiator to the intake. Hot air is delivered through the asbestos-lagged duct, which runs along the starboard side of the fuselage to the rear turret. Two branch pipes lead from the main duct, one to the port side of the mid-upper turret and the other into the H2S scanner. A rotary sleeve valve control is provided at the H2S unit and a butterfly valve at the rear turret, but no separate control is provided at the mid-upper turret.

OXYGEN EQUIPMENT

16. The oxygen equipment consists of fifteen bottles connected by a high-pressure pipe to a regulator on the pilot's instrument panel, and then by medium pressure pipes to four manifolds. From these manifolds low-pressure pipes carry the oxygen to the economisers at the various crew stations (*see* Fig. 5). When Modification L.50 is incorporated, six extra bottles are added to installation, and these are stowed on the starboard side between formers 24 and 25.

17. The fifteen bottles are stowed in a crate in the fuselage centre section, and the remaining bottles are mounted in the centre section on the starboard side of the fuselage. A charging connection in the bomb compartment is connected to a pipe feeding all the bottles, and thus enables the bottles to be charged without removal. A stop valve is mounted on the oxygen crate, from which a pipe line passes oxygen at high pressure to the master control on the pilot's instrument panel. Oxygen, leaving this regulator at a reduced pressure, passes through light alloy pipes to four manifolds. From here the pressure is further reduced, and the oxygen passes through aluminium pipes to the economisers. From each economiser a flexible pipe connects the supply to the oxygen socket. When the oxygen is not being used, the sockets are stowed in special cut-off clips. The operation of these clips is such that when the socket is inserted a small plunger is depressed and the oxygen supply is cut off. Cut-off valves are interposed in the low-pressure supply to the turrets.

18. Seven portable oxygen bottles are stowed in wire mesh containers at the following positions:—

(i) Under the starboard side decking of the nose turret installation.

(ii) On the back of the pilot's seat.

(iii) One on each of the two vertical stays just forward of the astrodome.

(iv) On the starboard side of the fuselage just forward of the rear spar.

(v) On the face of the bulkhead at the rear end of the bomb compartment.

(vi) On the starboard side of the fuselage just forward of the tail turret.

PHOTOGRAPHIC EQUIPMENT

19. The F.24 camera is mounted in the nose of the aircraft on the port side, in front of the bulkhead at former E and directly above a circular window (*see* Fig. 6). The camera rails fit into two brackets, in which they can slide horizontally at right angles to the centre line of the fuselage. The brackets slide vertically on mounting tubes which are braced to the bulkhead by tubular struts. Six holes are drilled in the mounting tubes to receive screw pins for locking the camera at different heights. The camera is mounted so that the optical axis is normal to the line of flight.

20. An electric motor mounted at the top of the bulkhead operates the camera by means of a flexible drive, and is controlled from a unit on the air bomber's port panel. A camera control switch and heater switch are also mounted on this panel. The camera heating muff and lens cover are plugged into the sockets on the camera heating panel fitted on former F on the port side of the fuselage.

21. For further information on photographic equipment, *see* A.P.1355.

POSITIONS FOR F.24 CAMERA

22. The camera may be set in any of the following four positions, which are indicated by the numbered holes in the tubes:—

5 in. lens	Position No. 6
8 in. lens	Position No. 5
14 in. lens	Position No. 1
20 in. telephoto lens	Position No. 1

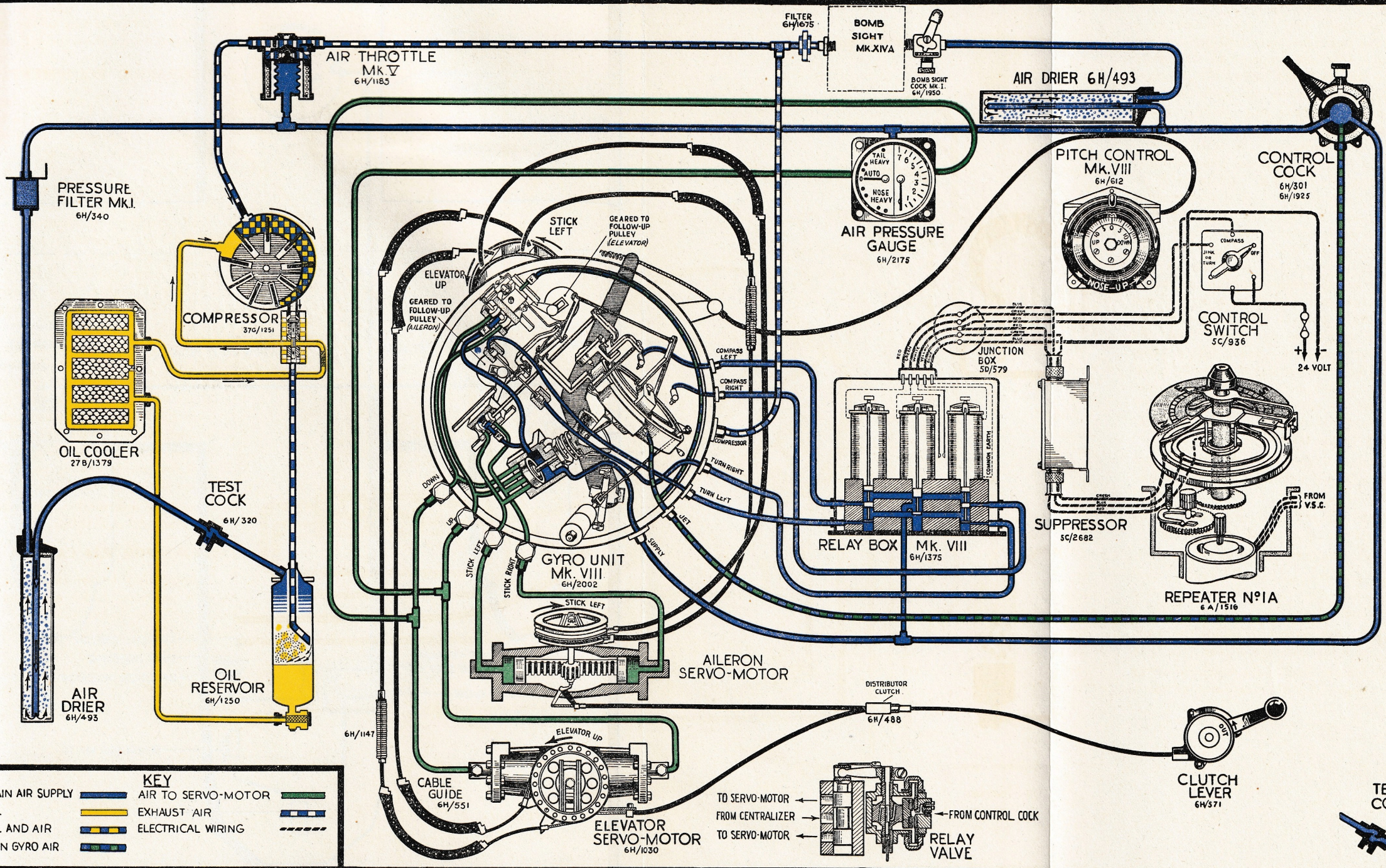

AUTOMATIC PILOT MK.VIII

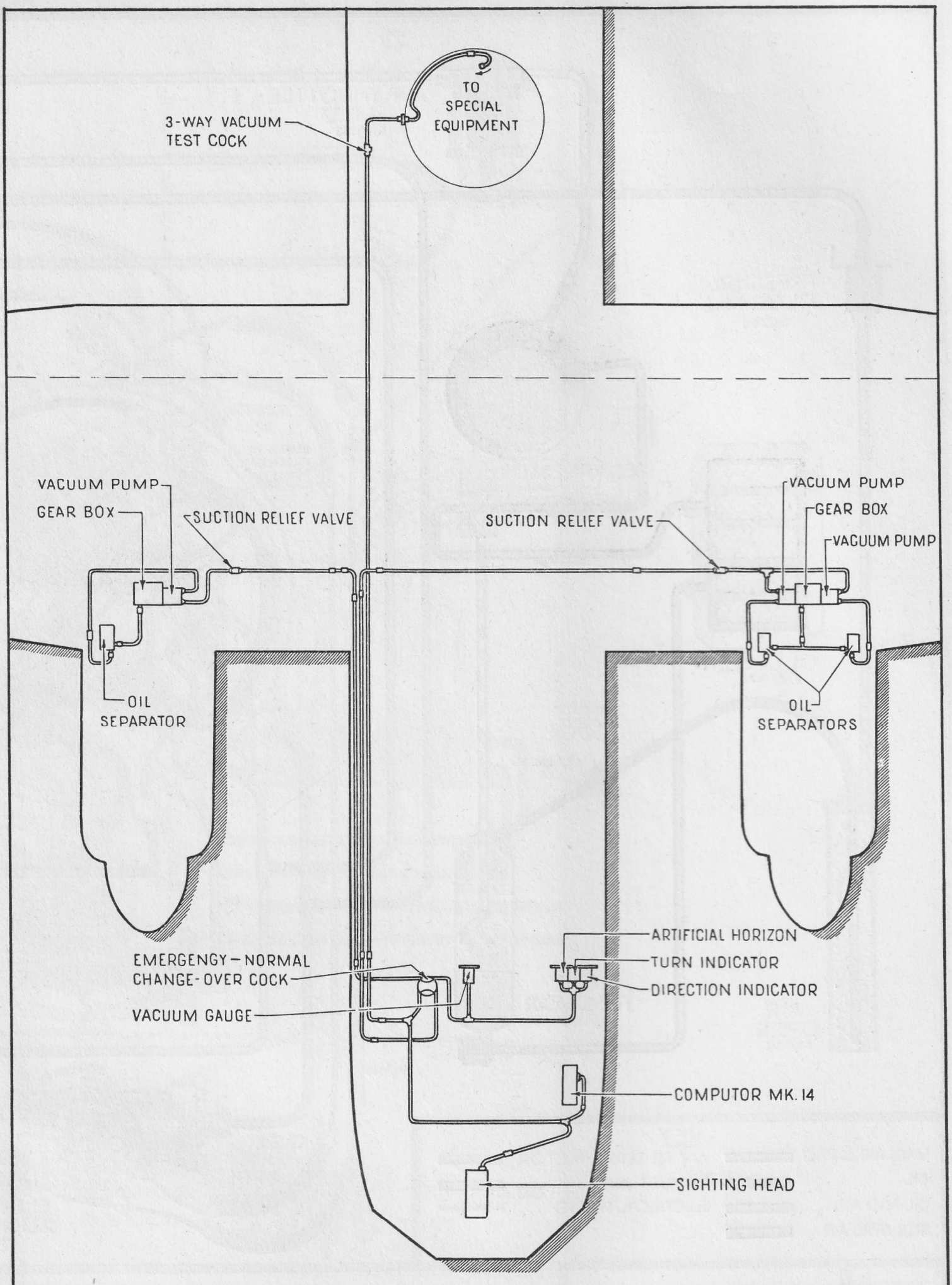

2	VACUUM SYSTEM	2

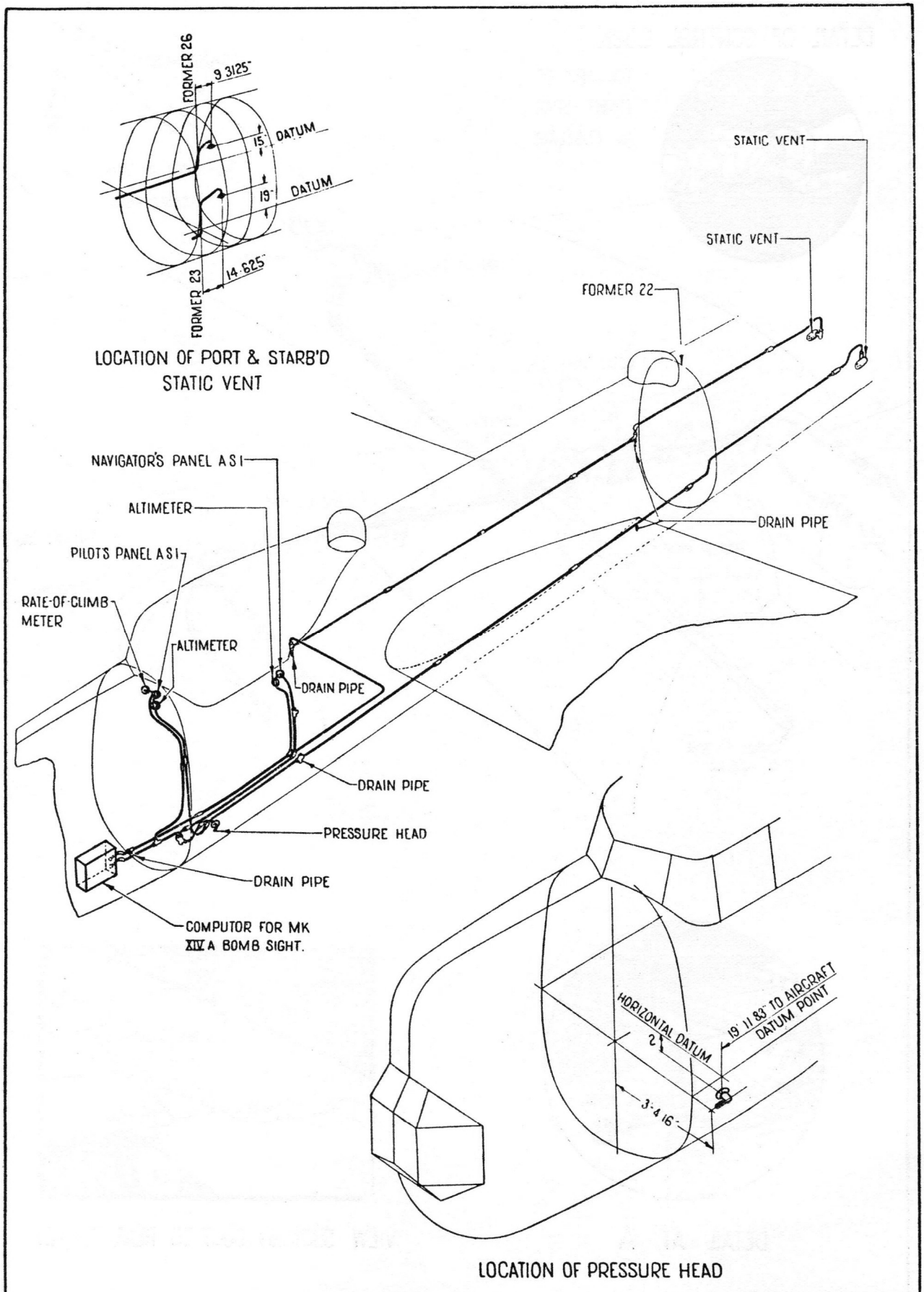

3	A.S.I. SYSTEM	3

DETAIL OF CONTROL COCK



FORWARD OF FRONT SPAR IN FUSELAGE

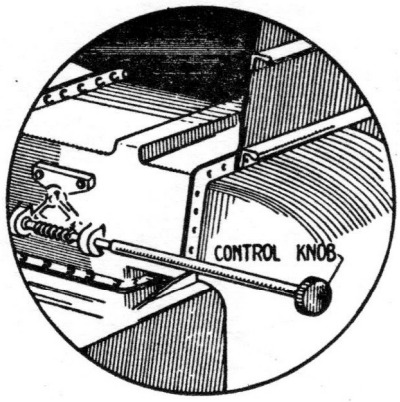

DETAIL AT A

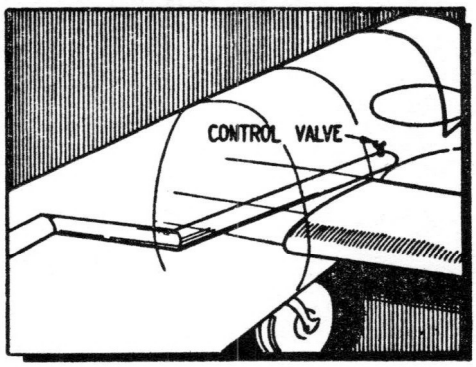

VIEW SHOWING DUCT TO REAR TURRET

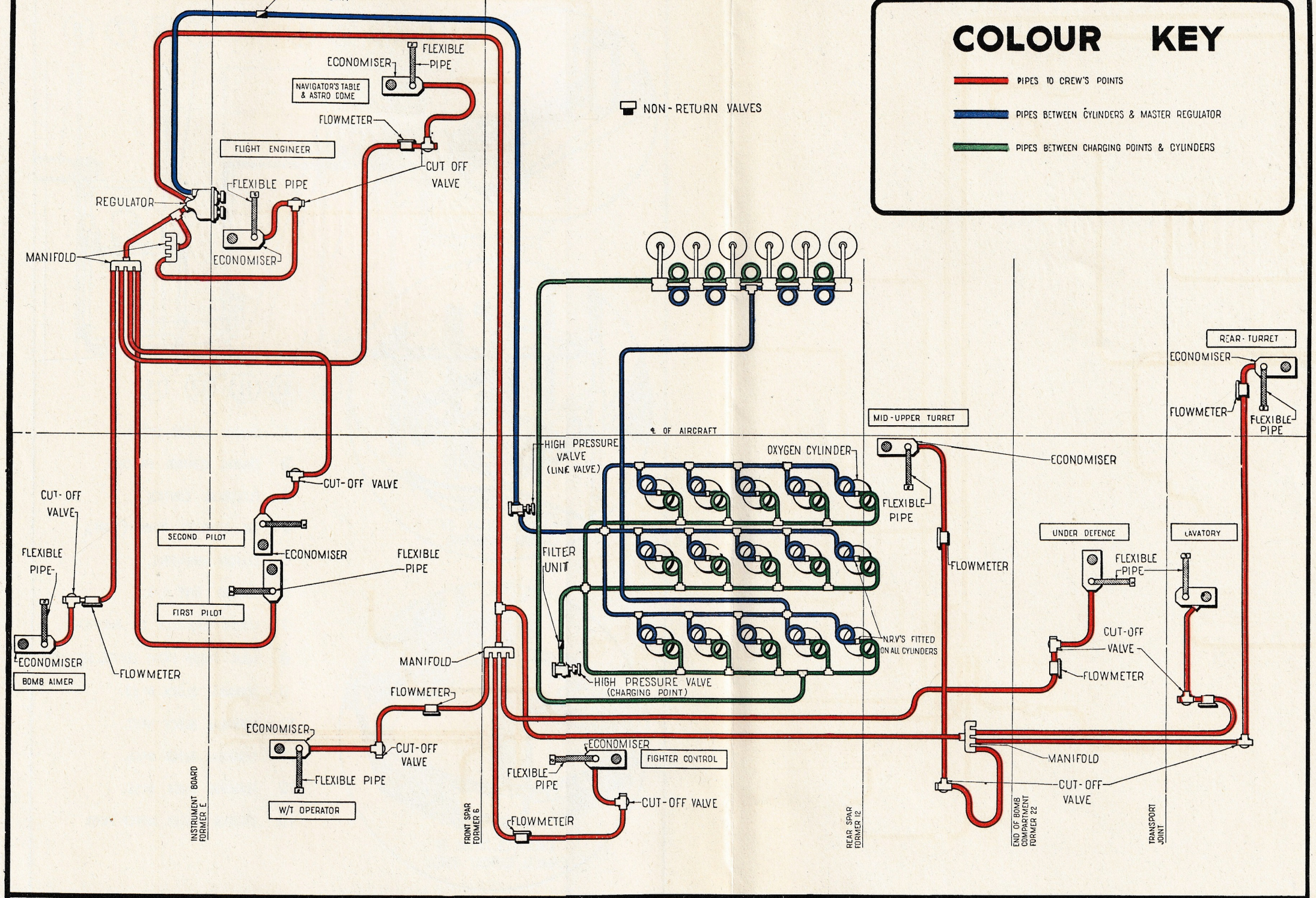

5 LINCOLN MK 30 – *Oxygen System* 5

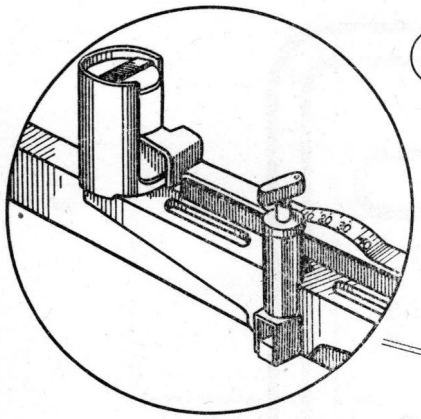

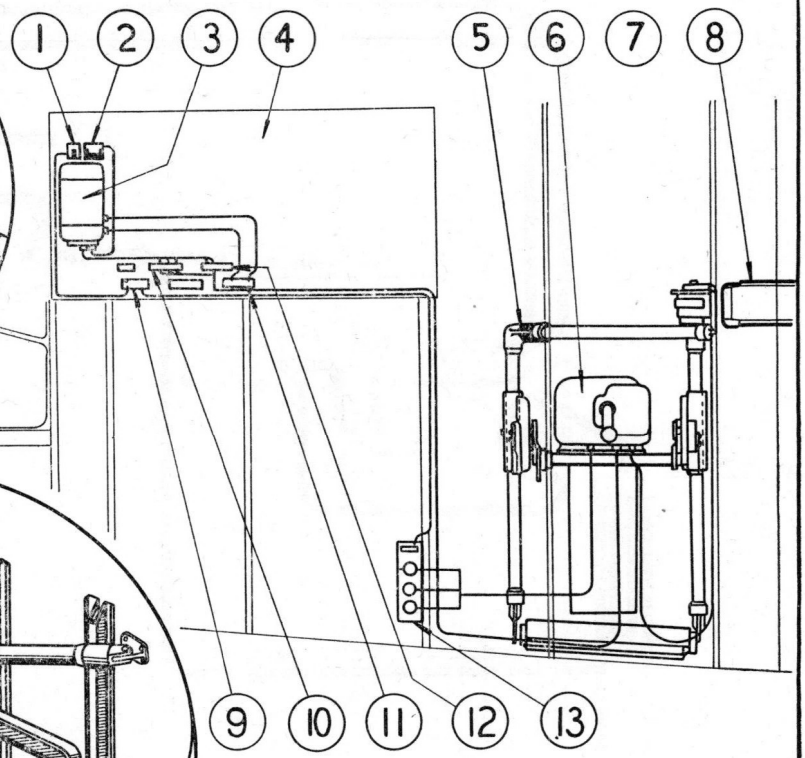

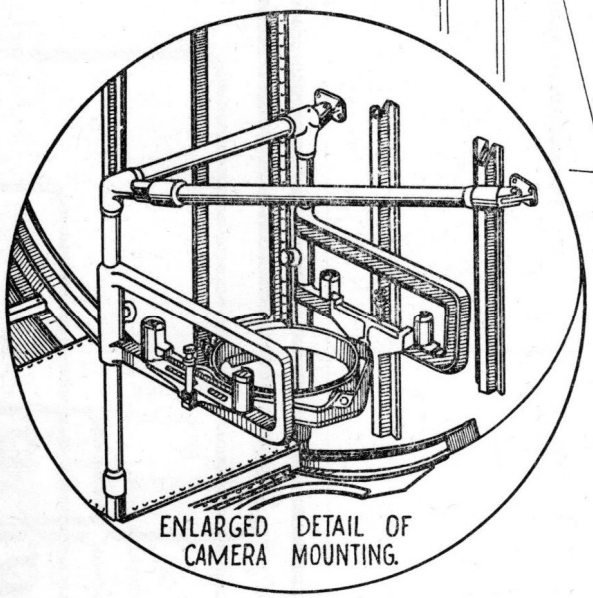

ENLARGED DETAIL OF CAMERA MOUNTING.

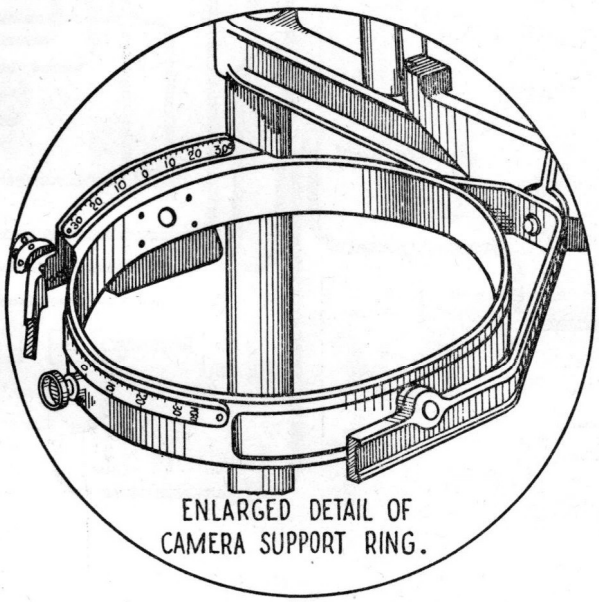

ENLARGED DETAIL OF CAMERA SUPPORT RING.

1 CAMERA HEATER SWITCH.

2 CAMERA CONTROL SWITCHES.

3 ELECTRICAL CONTROL.

4 AIR BOMBER'S PANEL (PORT).

5 CAMERA MOUNTING.

6 CAMERA - TYPE F.24.

7 MOTOR - MOUNTED ON BULKHEAD.

8 MAIN FLOOR - FRONT CENTRE SECTION.

9 TERMINAL BLOCK Nº 53.

10 TERMINAL BLOCK Nº 57.

11 TERMINAL BLOCK Nº 55.

12 TERMINAL BLOCK Nº 56.

13 CAMERA HEATER SUPPLY PANEL

Section 12

Armament Installations & Servicing

CHAPTER 1. BOMBING EQUIPMENT
CHAPTER 2. TURRETS

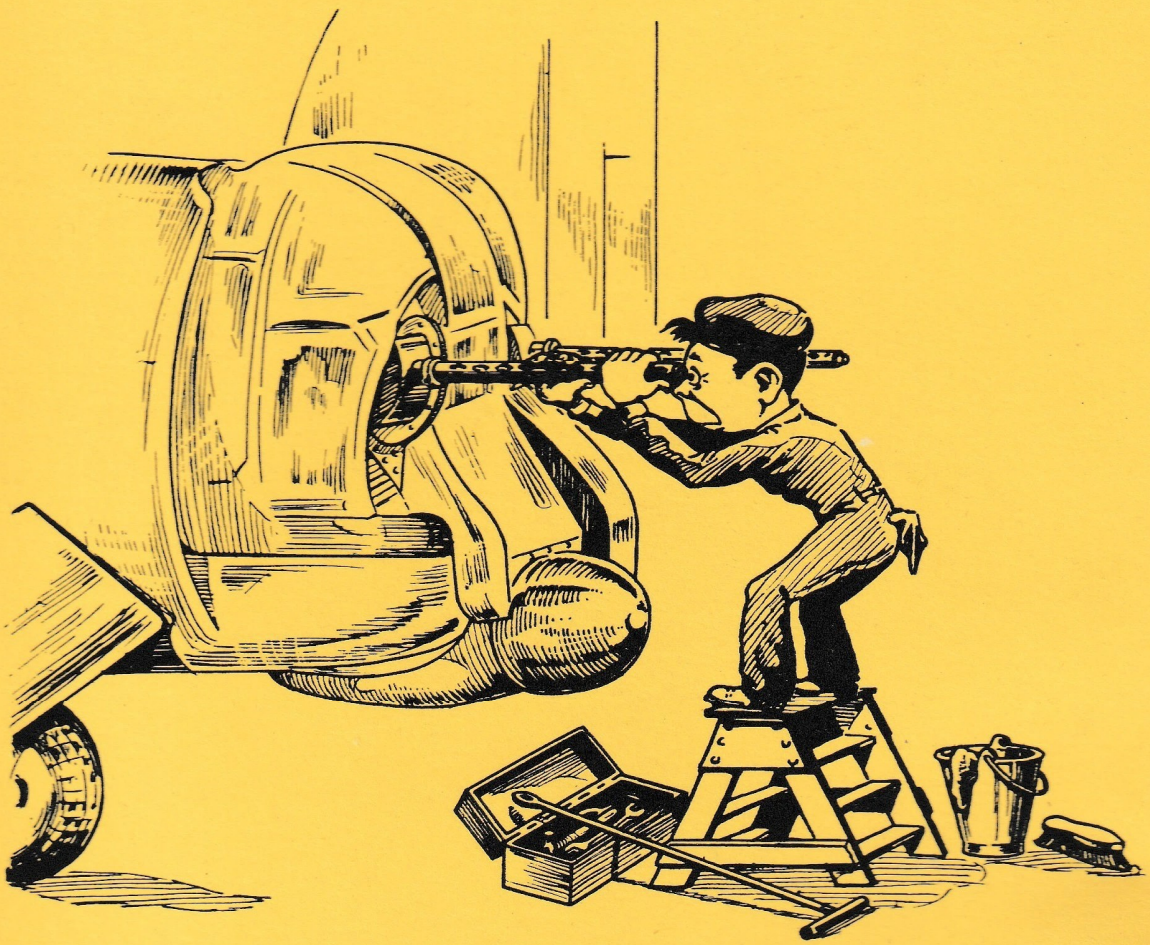

CHECK THAT THE GUNS ARE CLEAR EGBERT
BEFORE STARTING WORK ON TURRETS.

SECTION 12 — CHAPTER 1

Bombing Equipment

CONTENTS

	Para.
BOMBING EQUIPMENT —	
Air bomber's station	4
Bomb sights	5
Bomb bay and equipment	6
Bomb carrier adaptors	10
Bomb carriers	11
Electrical system	12
MISCELLANEOUS EQUIPMENT	16
OPERATION —	
Bomb sight equipment	17
Bomb release equipment	19
Emergency mechanical release	20
REMOVAL AND INSTALLATION —	
Mk. XIVA bomb sight and computor ...	21
Standard bomb gear housing	22
BOMBING UP —	
Opening the bomb doors...	23

ILLUSTRATIONS

	Fig.
Air bomber's station	1
Air bomber's station — port side details	2
Air bomber's station — starboard side details	3
Mk. XIVA bomb sight installation ...	4
* Mk. III low-level bomb sight installation	5
Bomb compartment data (1)	6
Bomb compartment data (2)	7
Crutching and fuzing for heavy bombs	8
Release unit type F (with attachment G)	9
Standard bomb gear housing	10

* To be issued later.

Bombing Equipment

1. This chapter describes the bombing equipment, and much information in the form of illustrations appears at the end of the text.

2. The bombing equipment is made up of sighting and electrical equipment at the air bomber's station in the fuselage nose and the bomb carrier housings, crutching gear and fuzing units in the main floor above the bomb bay, etc.

3. The following is a list of associated publications to which reference should be made:—

Bomb Sight and Computor, Mk. XIVA, R.A.A.F. Publication No. 714, Vol. I; Servicing, R.A.A.F. Publication No. 714, Vol. II.

Selector and Pre-selector Switches, Automatic Distributors, E.M. Fuzing and Release Units, A.P.1095B, Vol. I; Servicing, A.P.1095B, Vol. I.

Bomb Carriers, Flare Chutes, R.A.A.F. Publication No. 712, Vol. I; Servicing, R.A.A.F. Publication No. 712, Vol. II.

Winches, Trollies, R.A.A.F. Publication No. 716, Vol. I; Servicing, R.A.A.F. Publication No. 716, Vol. II.

BOMBING EQUIPMENT

Air Bomber's Station

4. A general view of equipment at the air bomber's station is given in Fig. 1. A sliding seat for the air bomber enables him to sit immediately behind the bomb sight in the forward end of the nose. The seat, which slides in a fore-and-aft direction, may be locked in any one of five positions by small levers located fore-and-aft of the seat on the supporting frame. Below the seat is a map stowage, and on the starboard side, at floor level, is a stowage for the bomb firing switch and bomb sight lead. The Mk. XIVA bomb sight computor is on the port side of the nose, with the bomb sight cock above on the automatic pilot's panel. The arrangements of the pipe lines connecting the computor and the sighting head with the automatic pilot, vacuum and A.S.I. systems is shown in Fig. 2. The bomb selector, fuzing and release controls are carried on a panel on the starboard side (*see* Fig. 3).

Bomb Sights

5. Provision is made for fitting either the Mk. XIVA bomb sight or the Mk. III low-level bomb sight. A flexible drive from the latter is taken aft along the port side under the main floor, passing upward to a computor stowage above the forward end of the navigator's table. The bomb sight control panel is located centrally at the extreme forward end of the nose, below the bomb sight.

Bomb Bay and Equipment

6. The bombs are carried in a single compartment, 33 ft. 5 in. long and the full width of the fuselage, extending from a bulkhead at former E, at the rear of the fuselage nose, to a second bulkhead at former 22 (*see* Fig. 6). An inspection door in the starboard side of the forward bulkhead enables the air bomber to examine the bomb compartment from the nose, and a round inspection window is also provided in the rear bulkhead. Hydraulically operated doors, each the full length of the compartment, are hinged to the sides. The standard doors allow sufficient depth for a 4,000 lb. bomb. Larger doors, deep enough to enclose an 8,000 lb. bomb, must be fitted before a bomb of that size can be carried (*see* Fig. 7).

7. The bomb carrier housings are fitted between the cross-beams of the main floor, which forms the roof of the bomb compartment. There are fourteen standard housings, located as shown in Fig. 6, and one convertible heavy bomb slip at the centre station between the main plane spars. The sizes and weights of the bombs which can be carried at the various stations can be determined by reference to Figs. 6 and 7. For details and installation of the bomb gear housings and the crutching gear incorporated with them, *see* Fig. 10. Similar additional crutching gear

is fitted to floor beam 2, between floor beam 11 and the rear spar, to crutch the longer carriers required for 2,000 lb. bombs, carried at stations 8, 10 and 12, and 7, 9 and 11. The numbers of the bomb gear housings are stencilled above and under the floor.

8. The bomb gear crutching handles are stowed in a pouch on the port side of the fuselage between the main plane spars. A special crutching arrangement exists at the crutching points on the starboard side and on the centre line just forward of the rear spar, where the nitrogen bottles prevent the use of the handle. A projecting, square-ended adaptor is permanently fitted at each of these positions, and is turned by means of an open 2BA spanner.

9. The heavy bomb slip incorporates release unit, type F, which can either be fitted alone, using adaptors at the sides, or with attachment, type G (*see* Fig. 9). The special crutching and fuzing units required for heavy bombs are illustrated in Fig. 8.

Bomb Carrier Adaptors

10. The following adaptors may be used:—

(i) The Lancaster Adaptor, No. 1, Mk. I, with two standard Avro carriers, Mk. I, can be fitted at stations 1, 2, 11 and 12, enabling two bombs up to 500 lb. weight each to be carried at each of these stations. This adaptor was originally known as the Whitlock Adaptor.

(ii) The Lancaster Adaptor, No. 1, Mk. II, with two standard Avro carriers, Mk. II.

(iii) The Lancaster Adaptor, No. 4, can be fitted at station 13, enabling a bomb up to 1,000 lb. weight to be carried at this station.

Bomb Carriers

11. Avro standard carriers, Mk. I (identification No., E11A/1015), or Mk. II (identification No., E11A/2568), are used for bombs up to 1,000 lb. weight. For 2,000 lb. bombs, the Avro 2,000 lb. heavy bomb carrier (identification No., E11A/1054) is used.

Electrical System

12. The location of the air bomber's electrical controls and equipment is illustrated in Figs. 1, 2 and 3. For information on the electrical supply to the bomb sights and Mk. XIVA computor, bomb release circuits and the interconnection with the D.R. compass circuit, *see* Section 6, Chapter 1. Details of the fuzes on the air bomber's starboard panel are tabulated in Fig. 3, including those for distributor heating, bomb release heating (station No. 13) and heated clothing. Switches for the latter two are also on the starboard panel, and the heated clothing socket is on the port panel. A junction box, reference JBA, is fitted at the forward end of the bomb compartment. The release positive terminals in the junction box are referenced with the number of the bomb station to which they connect, and these references agree also with the switch numbers on the pre-selector switch unit.

13. The pilot's controls consist of a bomb firing switch on the rim of the aileron control hand wheel, and a container jettison switch and bomb jettison pull handle on the main instrument panel. A bomb firing switch is provided on the navigator's table for use when bombing on radar.

14. The circuit to the automatic bomb sight plug and socket, to the fuzing switches and to the firing switches, is made through two plunger type switches wired in series, which are closed as the bomb doors are opened (*see* Fig. 6). The circuit is completed before the doors are fully open, and the fact that the bombs can be released does not mean that the doors are open wide enough to allow them to fall clear.

15. The air bomber's firing switch is locked in an interlock when not in use, and cannot be removed until nose or tail fuzing has been selected. It can be plugged into one of two sockets, BOMBS AND NIGHT CAMERA, or BOMBS AND DAY CAMERA. In the first position, provided the linked master switches on the air bomber's port side panel have been closed, release of the bombs causes the simultaneous release of a photo flash, and starts the camera. If the pilot's or navigator's bomb firing switches are used, the photo flash release circuit is made through terminal 16 of

the pre-selector switch box, if selected, and the photo flash is released by the action of the auto-distributor. In the BOMBS AND DAY CAMERA position, the air bomber's firing switch starts the camera when the bombs are released, but the other firing switches do not operate the camera. When the master switches are closed to enable the camera to be used in the DAY position, then position No. 16 must not be selected on the bomb release controls, or the photo flash release will operate also.

MISCELLANEOUS EQUIPMENT

16. The air bomber's intercommunication socket, PRESS - TO - TRANSMIT switch, oxygen supply pipe and cut-off valve, and hand pump for glycol spray, are all on the port side of the fuselage nose, and are illustrated in Fig. 1.

OPERATION

Bomb Sight Equipment

17. The bomb sight cock on the port side of the air bomber's station controls the air supply from the automatic pilot to the computor. The Arrow compressor, which is driven by the port inboard engine, is capable of maintaining an air supply sufficient to operate both the automatic pilot and the bomb sight equipment at the same time.

18. The vacuum system connections to the computor and the sighting head are controlled by a vacuum changeover cock on the right-hand side of the pilot's instrument panel. At NORMAL, two vacuum pumps on the port inboard engine operate this section of the vacuum system, which includes a connection to the special equipment, when fitted, in the fuselage rear centre section. At EMERGENCY, the two pumps are connected to the instrument flying panel.

Bomb Release Equipment

19. The electrical operation of the bomb release equipment is covered in the brief descriptive notes on the electrical system (*see* paragraph 12).

Emergency Mechanical Release

20. It is possible to jettison bombs mechanically from the heavy bomb slip or the Avro standard carrier, Mk. I or Mk. II, if the electrical release fails to operate. Mechanical jettisoning is not possible from the Avro 2,000 lb. heavy bomb carrier. The heavy bomb slip at station 13 is provided with a mechanical release lever (*see* Fig. 10). In the standard bomb gear housing a loose hook is stowed under the detachable cover, and is used to jettison bombs from the standard carrier by inserting it through the bomb gear housing adjacent to the electrical plug and hooking it under the mechanical release lever on the carrier, which can then be pulled up to release the bomb.

REMOVAL AND INSTALLATION

Mk. XIVA Bomb Sight and Computor

21. Instructions will be found in Fig. 4.

Standard Bomb Gear Housing

22. Instructions will be found in Fig. 10.

OPENING THE BOMB DOORS

23. If the bomb doors are not already open, and the inboard engines (which drive the general services hydraulic pumps) are not running, it will be necessary to use the hand hydraulic pump on the port wall of the fuselage aft of the front spar to open the doors. The control lever must be placed in the OPEN position before starting to use the pump. Safety brackets (stores reference, 26EA/3873) should be fitted to the bomb door jacks to prevent inadvertent closing of the doors while bombing-up is in progress. For remaining bomb carriers, making final adjustments and checking, a step-ladder will be required.

24. Standard loading winches (*see* A.P. 1664c) are used. For heavy bombs, at station 13, two safety holes are provided, one forward and one aft of the bomb slip. The adjustable crutches for these bombs are removed when the other bomb loads are carried. Fig. 8 gives instructions for adjusting the crutches and positioning the special fuzing bracket for 4,000 and 8,000 lb. bombs, and Fig. 9 illustrates the method of fitting release unit, type F (and, when required, attachment, type G), at station 13.

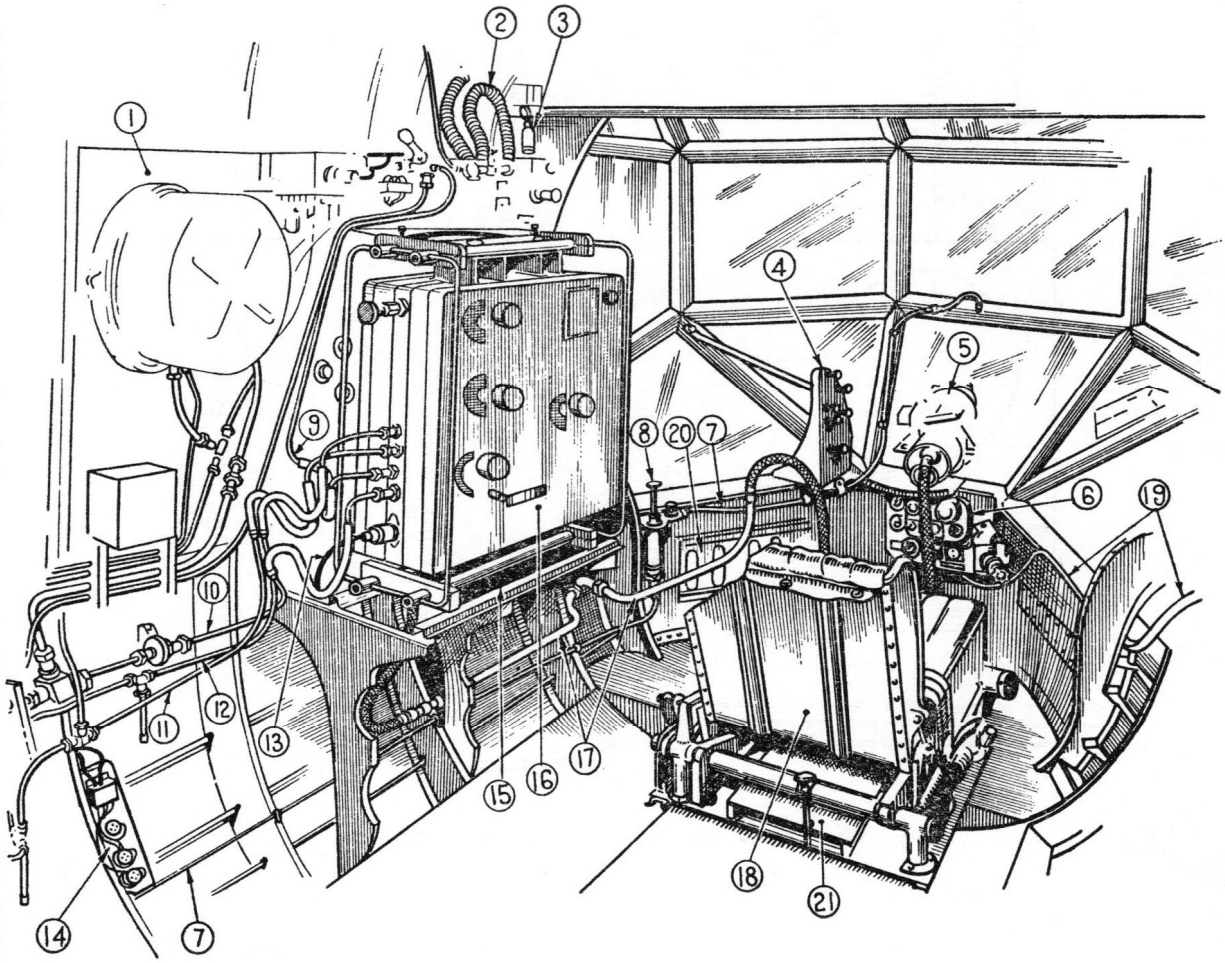

· KEY ·

1 AUTO. PILOT PANEL
2 OXYGEN PIPE
3 INTER-COM.
4 BOMB SIGHT MTG. BKT.
5 BOMB SIGHT (PART)
6 BOMB SIGHT CONTROL PANEL
7 GLYCOL SPRAY-PIPE
8 GLYCOL PUMP
9 BOMB SIGHT-AUTO. PILOT SUPPLY
10 BOMB SIGHT-AUTO. PILOT EXHAUST
11 A.S.I. SYSTEM - PITOT LINE
12 A.S.I. SYSTEM - STATIC LINE

FOR DETAILS OF AIR BOMBER'S PANEL - PORT - SEE FIG. 2

13 ELECTRICAL LEAD TO COMPUTOR
14 CAMERA HEATER
15 COMPUTOR MOUNTINGS
16 COMPUTOR
17 VACUUM PIPE
18 AIR-BOMBER'S SEAT
19 ELECTRICAL SUPPLY LEAD FROM AIR-BOMBER'S PANEL TO BOMB SIGHT CONTROL
20 LOUVRE
21 MAP STOWAGE

FOR DETAILS OF AIR-BOMBER'S PANEL - ST'BD. - SEE FIG. 3.

1 AIR BOMBER'S STATION 1

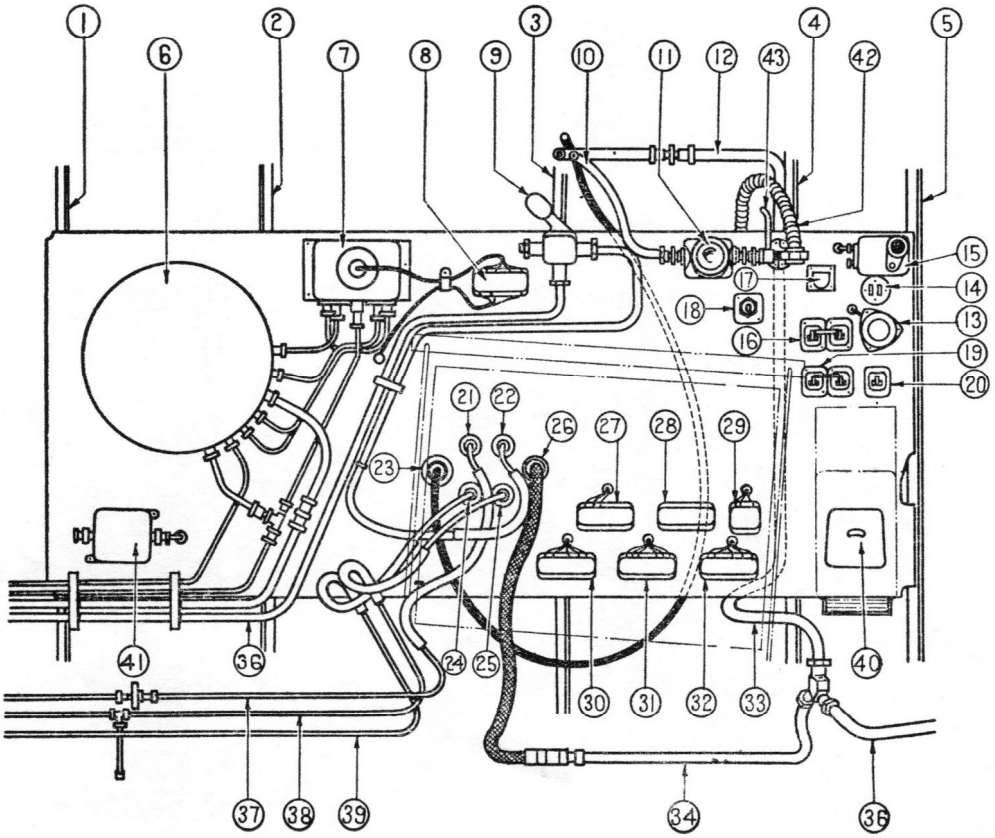

·KEY·

1 FORMER - F
2 FORMER - G
3 FORMER - H
4 FORMER - J
5 FORMER - K
6 GYRO UNIT
7 RELAY BOX
8 T.B. 35 - 5-WAY
9 BOMB SIGHT COCK - MK.XIV
10 OXYGEN SUPPLY
11 FLOW INDICATOR - MK.II
12 VACUUM PIPE-TO CH OVER COCK
13 DIMMER SWITCH - PANEL LIGHT
14 FILAMENT TYPE J RED
15 INTER-COM - CALL LIGHT
16 FLARE CHUTE SWITCH
17 FLARE CHUTE SWITCH
18 SWITCH - PRESS TO TRANSMIT
19 CAMERA CONTROL SWITCHES
20 CAMERA HEATER SWITCH
21 BOMB SIGHT-AUTO PILOT - EXHAUST
22 BOMB SIGHT-AUTO PILOT - SUPPLY
23 ELECT LEAD TO COMPUTOR
24 A.S.I SYSTEM - PITOT LINE
25 A.S.I SYSTEM - STATIC LINE
26 VACUUM PIPE-COMPUTOR GYRO
27 T.B. 56 - 5 WAY
28 T.B. 57 - 5 WAY
29 T.B. 58 - 5 WAY
30 T.B. 55 - 5 WAY
31 T.B. 54 - 5 WAY
32 T.B. 53 - 5 WAY
33 SEE ITEM 12
34 VACUUM PIPE - COMPUTOR
35 VACUUM PIPE - BOMB SIGHT HEAD
36 AIR SUPPLY FROM AUTO PILOT
37 EXHAUST TO AUTO PILOT
38 A.S.I SYSTEM - PIPE
39 A.S.I. SYSTEM - PIPE
40 WEDGE PLATE - CAMERA CONTROL
41 SUPPRESSOR - AUTO.PILOT CIRCUIT
42 OXYGEN SYSTEM - PIPE
43 OXYGEN PIPE - ECONOMISER MK.II

NOTE :- ITEMS 21 · 22 · 23 24 25 & 26 ARE STOWAGES WHEN COMPUTOR IS NOT INSTALLED - SEE FIG. 1 FOR CONNECTIONS TO COMPUTOR

2	AIR BOMBER'S STATION - PORT SIDE DETAILS	2

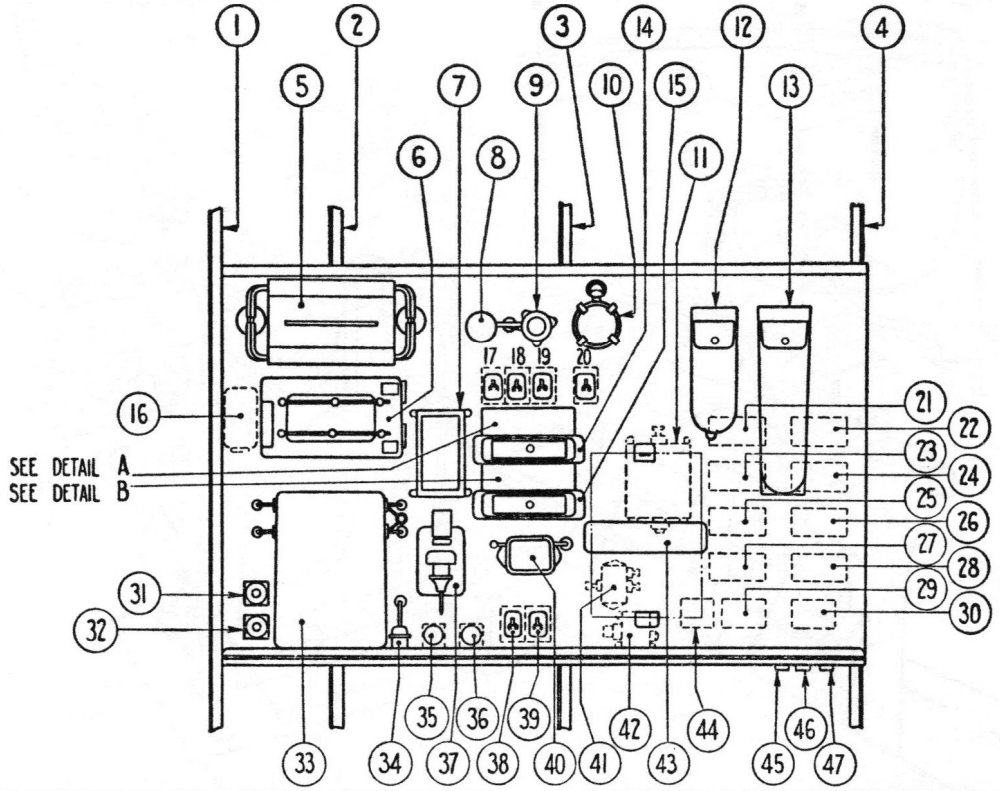

FUSE No.	FUSE SIZE	SERVICE	FUSE No	FUSE SIZE	SERVICE
RR1	20A	NOSE FUSING	RR5	10A	CAMERA HEATER
RR2	20A	TAIL FUSING	RR6	5A	AUTO BOMB SIGHT SUPPLY
RR3	5A	DISTRIBUTOR HEATING	RR7	20A	FLARE CHUTE
RR4	5A	BOMB SLIP HEATER	RR8	10A	CAMERA SUPPLY

DETAIL - A

FUSE No.	FUSE SIZE	SERVICE	FUSE No.	FUSE SIZE	SERVICE
SS1		BOMB SIGHT HEAD SUPPLY	SS5		
SS2		GENERAL LIGHTING	SS6		
SS3		HEATED CLOTHING	SS7		
SS4		DINGHY RELEASE	SS8		

DETAIL - B

· KEY ·

1	FORMER · K	18	TAIL FUSING SWITCH TYPE-B	35	PLUG - BOMBS & NIGHT CAMERA
2	FORMER · J	19	FUSING SWITCH	36	PLUG - BOMBS & DAY CAMERA
3	FORMER · H	20	BOMB - RELEASE HEATING SWITCH	37	FIRING SWITCH - STOWAGE
4	FORMER · G	21	T.B. 102	38	SWITCH · HEATED CLOTHING - BODY
5	PRESELECTOR	22	T.B. 101	39	SWITCH · H.C. HANDS & FEET
6	SELECTOR SWITCHBOX	23	T.B 100	40	FUSE BOX
7	B.S D.R REPEATOR CORR. CARD	24	T.B. 99	41	JUNCTION BOX 3-WAY TYPE A
8	COCKPIT LAMP MK. II	25	T.B. 79	42	JUNCTION BOX 5-WAY TYPE A
9	DIMMER SWITCH TYPE - E	26	T.B. 78	43	STOWAGE FOR COVER OF ITEM 33
10	WATCH & HOLDER	27	T.B. 81	44	T.B. 84
11	SUPPRESSOR TYPE - P	28	T.B 80	45	BREEZE PLUG
12	LEAD EXTN. IN SATCHEL	29	T.B. 83	46	BREEZE PLUG
13	INSPECTION LAMP IN SATCHEL	30	T.B. 82	47	BREEZE PLUG
14	FUSE BOX TYPE G 8-WAY	31	TURRET CONTROL SWITCH START		
15	FUSE BOX TYPE G 8-WAY	32	TURRET CONTROL SWITCH STOP		FOR OTHER DETAILS OF
16	RESISTANCE UNIT	33	AUTO DISTRIBUTOR		AIR BOMBER'S STATION
17	NOSE FUSING SWITCH TYPE-B	34	PLUG - 2 WAY		SEE FIGURES 1 & 2

3 AIR BOMBER'S STATION - ST'BD SIDE DETAILS 3

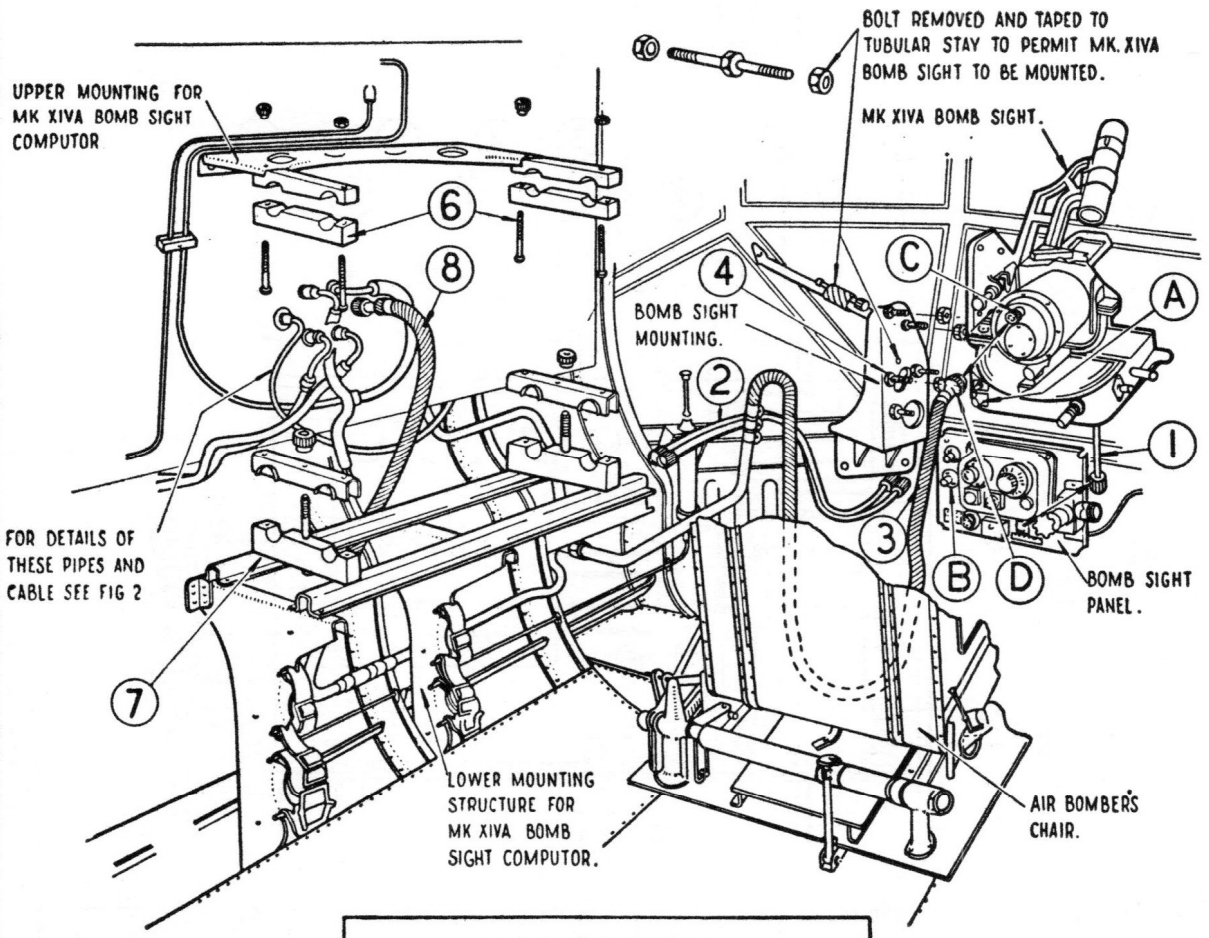

DETAIL E

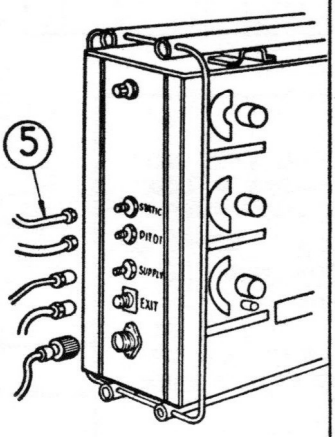

VIEW ON AFT END OF COMPUTOR SHOWING CONNECTIONS FOR SERVICES.

REMOVAL INSTRUCTIONS

MK. XIVA BOMB SIGHT.

1. DISCONNECT ELECTRICAL LEAD.
2. DISCONNECT FLEXIBLE DRIVES AT A AND RE-CONNECT AT STOWAGE B
3. REMOVE VACUUM PIPE AT C RE-CONNECT AT D
4. UNBOLT BOMB SIGHT AND REMOVE FROM MOUNTING.

COMPUTOR FOR MK.XIVA BOMB SIGHT.

5. DISCONNECT ALL SERVICES TO AND FROM THE COMPUTOR. SEE DETAILS E AND F
6. UNBOLT THE TWO TOP SPLIT MOUNTING BLOCKS
7. UNBOLT THE TWO BOTTOM SPLIT MOUNTING BLOCKS AND REMOVE THE COMPUTOR.
8. RE-CONNECT THE SERVICES TO THE COMPUTOR TO THEIR RESPECTIVE STOWAGE POSITIONS (SEE FIG. 2).

— CAUTION —

GREAT CARE MUST BE TAKEN NOT TO JAR THE COMPUTOR IN ANY WAY DURING ITS REMOVAL.

HANDLE LIKE EGGS.

DETAIL F

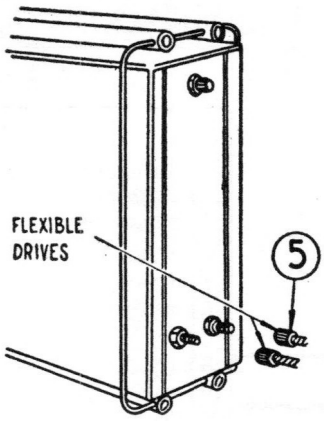

VIEW OF FORWARD END OF COMPUTOR SHOWING FLEXIBLE DRIVE CONNECTIONS.

PORT STBD.

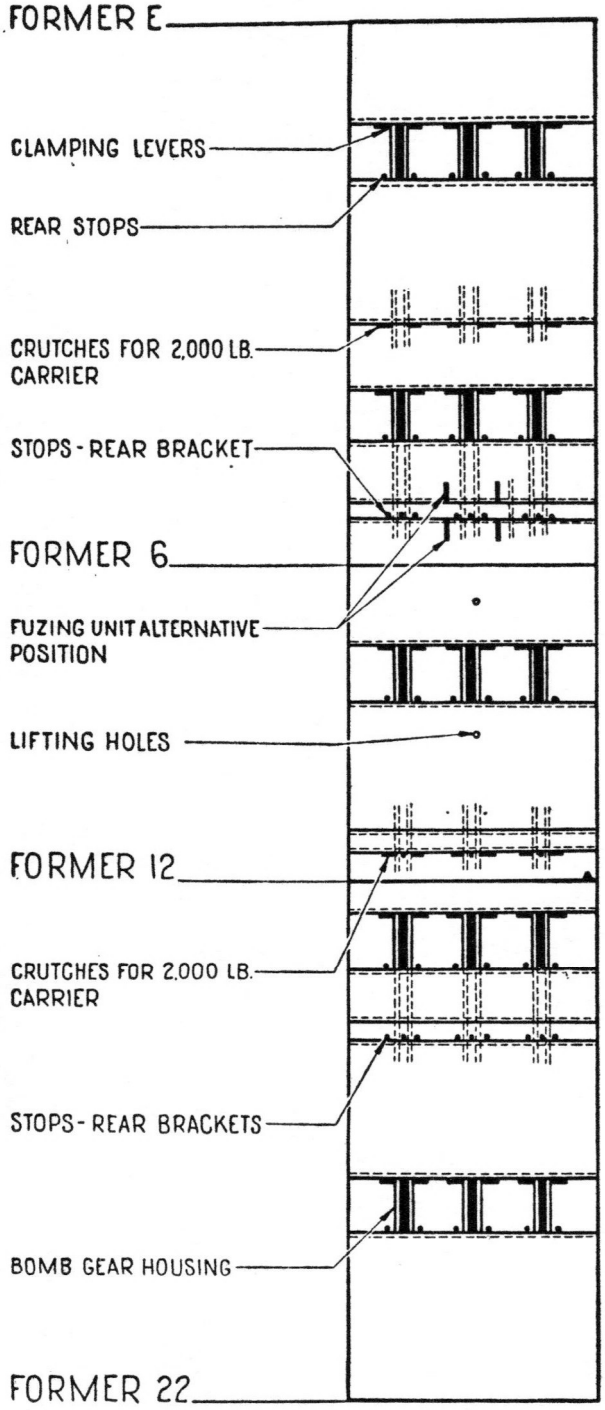

BOMB POSITIONS

BOMBS UP TO 1,000 LB. WEIGHT (SHORT TYPE) AT ALL STATIONS EXCEPT Nº 13 BOMBS REQUIRING THE USE OF AVRO 2,000 LB. HEAVY BOMB CARRIER MAY BE CARRIED AT STATIONS 7, 8, 9, 10, 11 AND 12.

ONE 4,000 LB. BOMB AT STATION Nº 13 USING Nº 3 ADAPTORS, 2 - 500 LB. BOMBS AT EACH OF THE FOLLOWING STATIONS Nºs 1, 2, 11 AND 12

WINCHES REQUIRED.

500 LB. STANDARD

2,000 LB. STANDARD - 2 FOR 4,000 LB. BOMB

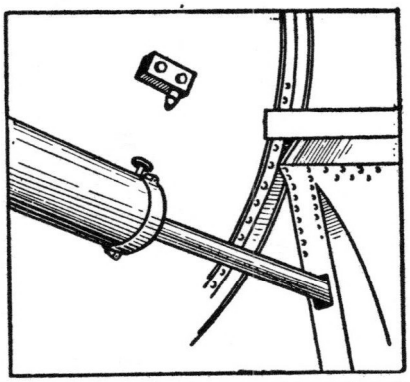

DETAIL SHOWING PLUNGER SWITCH ON AFT STBD. FACE OF FORMER E

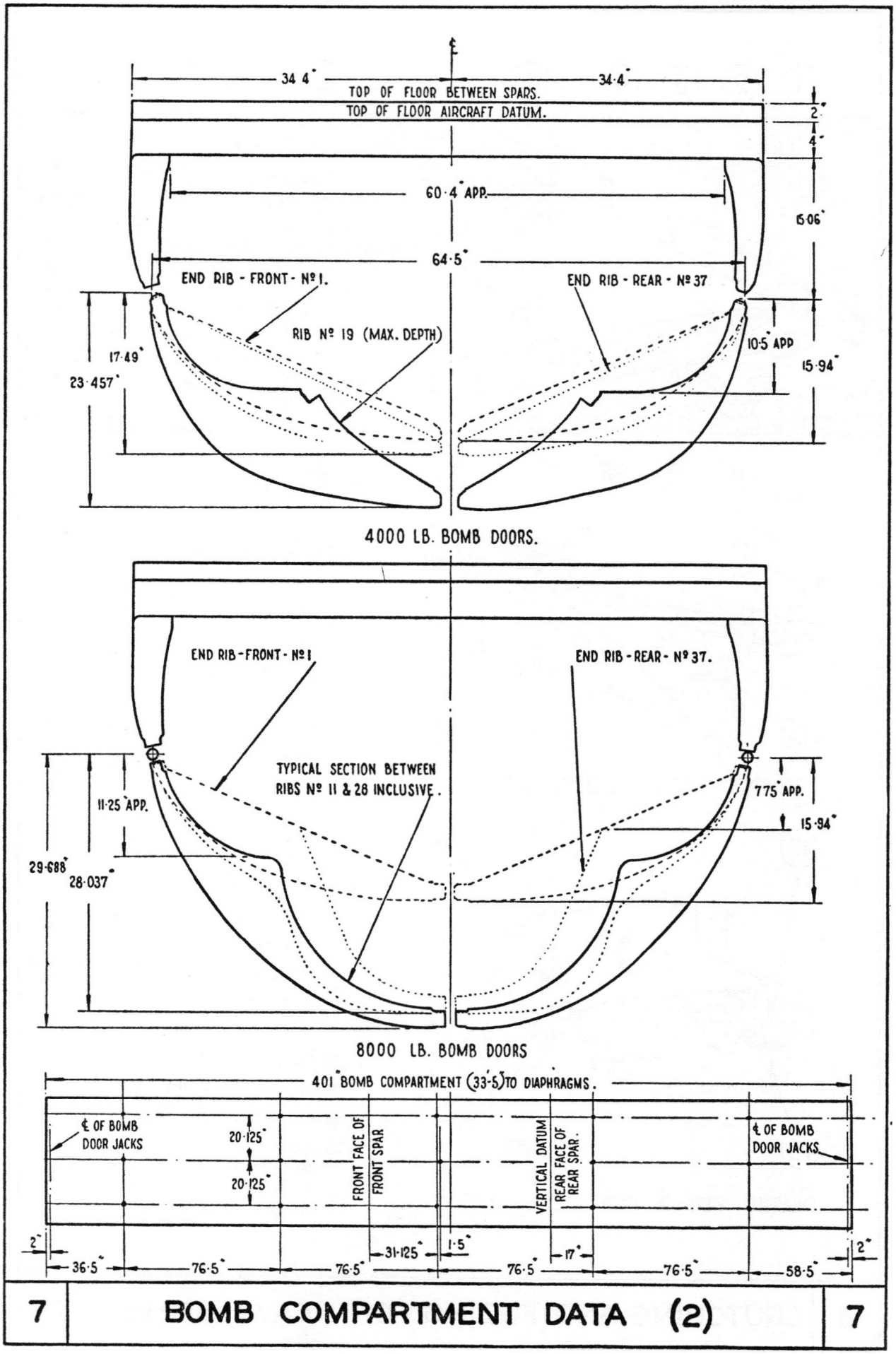

7	BOMB COMPARTMENT DATA (2)	7

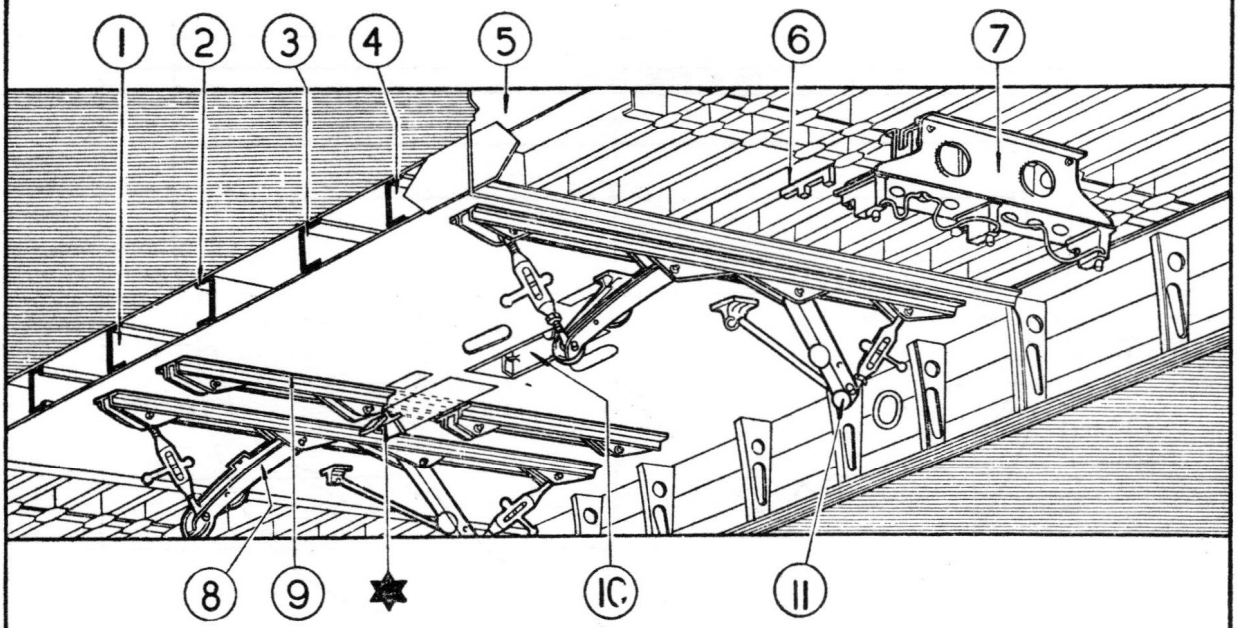

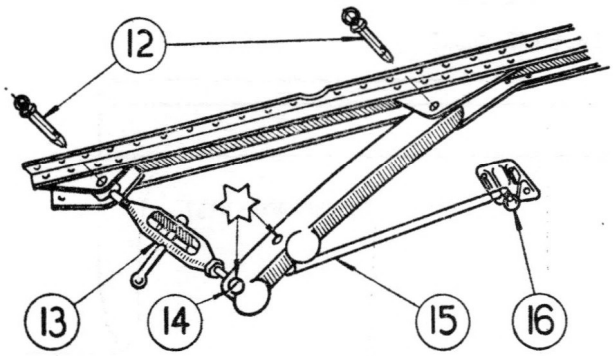

ENLARGED VIEW OF CRUTCHING UNIT.

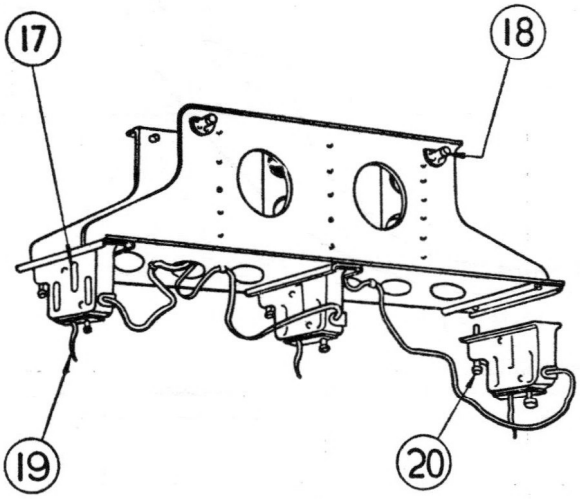

ENLARGED VIEW OF FRONT FUZING UNITS.

1. Nº 10 FLOOR BEAM.
2. Nº 9 FLOOR BEAM.
3. Nº 8 FLOOR BEAM.
4. Nº 7 FLOOR BEAM.
5. FRONT SPAR.
6. ALTERNATIVE POSITION FOR Nº 7
7. FRONT FUZING UNITS.
8. BOMB CRUTCHING UNIT - REAR.
9. ALTERNATIVE POSITION FOR Nº 8.
10. BOMB SLIP.
11. BOMB CRUTCHING UNIT - FRONT.
12. QUICK - RELEASE PINS.
13. TURNBUCKLE.
14. QUICK - RELEASE PIN.
15. TIE MEMBER.
16. QUICK - RELEASE PIN.
17. FUZING UNIT.
18. QUICK - RELEASE BUTTONS.
19. FUZING UNIT.
20. QUICK - RELEASE BUTTON.

★ SIDE FUZING UNITS SEE ALSO FIG. 6.

☆ THE TURNBUCKLE IS SHOWN IN THE 8,000 LB. BOMB POSITION. THE ALTERNATIVE POSITION INDICATED IS FOR 4,000 LB BOMBS.

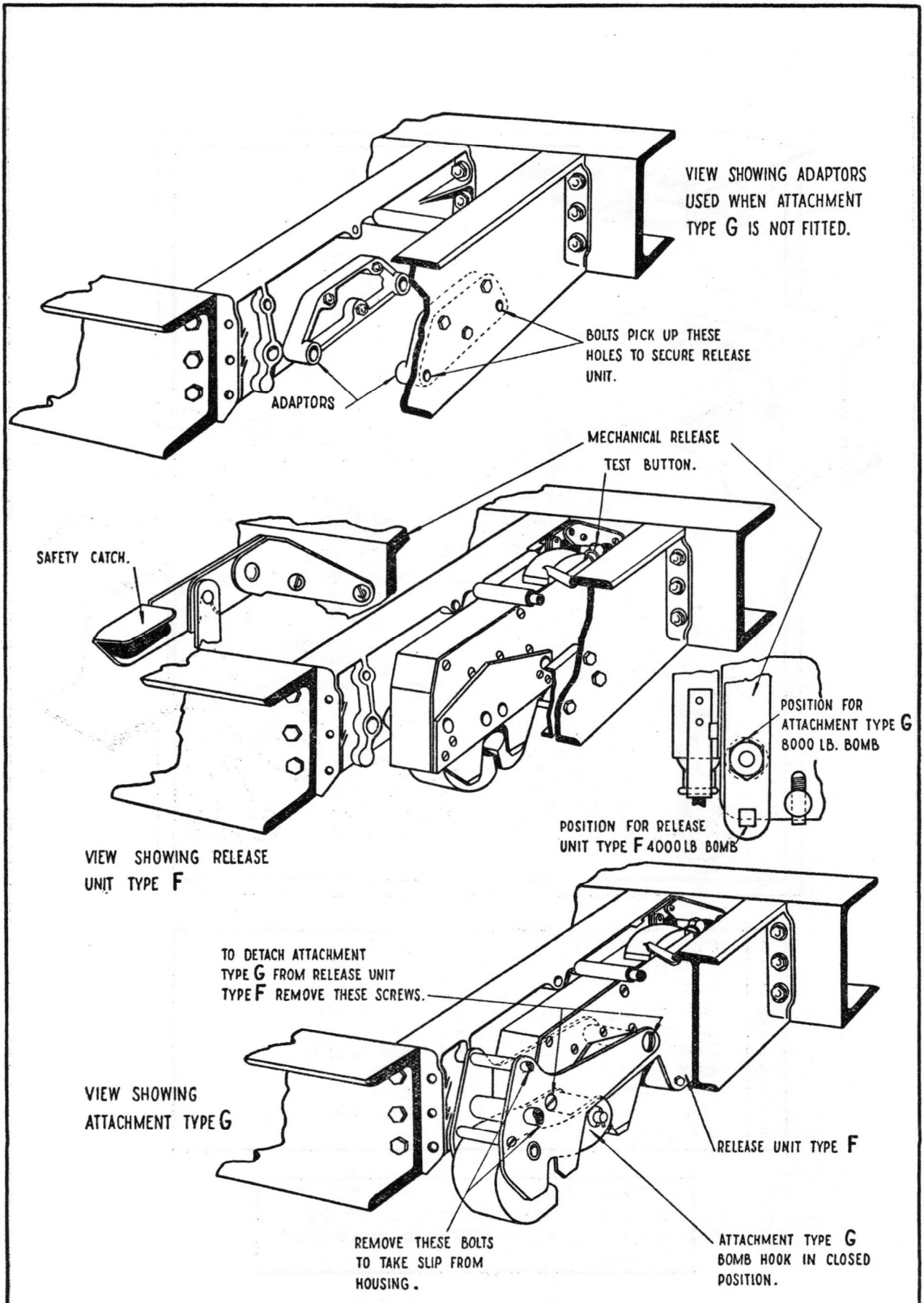

9	RELEASE UNIT TYPE F WITH ATTACHMENT TYPE G	9

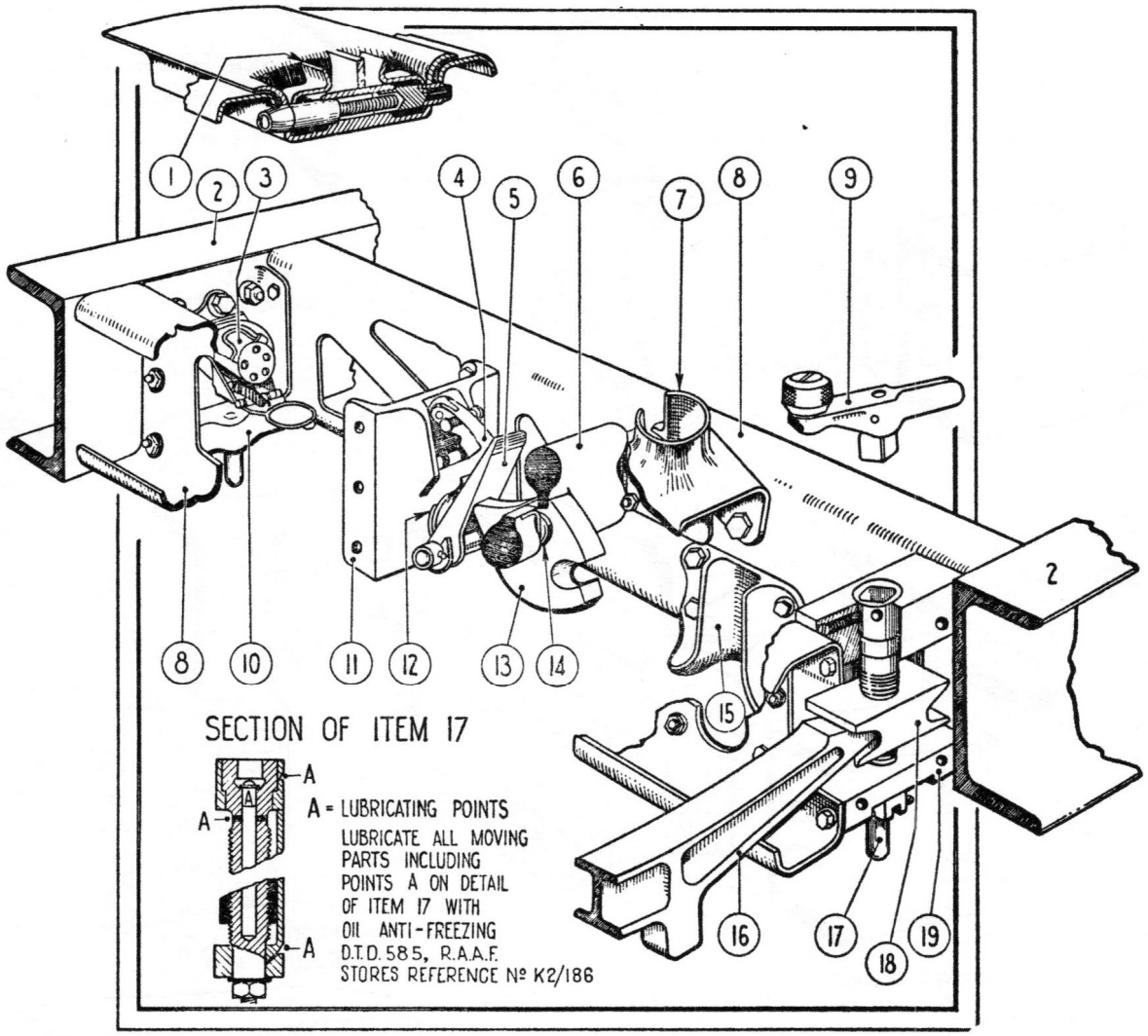

1	COVER - FINGER GRIP	11	BRACKET
2	FLOOR BEAMS	12	LEAF SPRING
3	SOCKET - 5 WAY	13	SLIP HOOK
4	PAWL AND TENSION SPRINGS	14	TORSION SPRING
5	TRIP CATCH	15	GUIDE
6	STIRRUP	16	CLAMPING LEVER
7	WINCH HOUSING	17	SCREW
8	SIDE MEMBER	18	CLAMP NUT
9	CRUTCHING HANDLE	19	CLAMP BODY
10	REAR BRACKET		

TO REMOVE HOUSING - DISCONNECT PLUG FROM SOCKET 3 - REMOVE FOUR BOLTS AT EACH END ATTACHING HOUSING TO FLOOR BEAMS AND WITHDRAW THE HOUSING.

SECTION 12 — CHAPTER 2

Turrets

CONTENTS

	Para.
GENERAL	1
NOSE TURRET	2
MID-UPPER TURRET...	6
TAIL TURRET...	17
SERVICING —	
General	25
Ammunition supply and loading... ...	27
Ammunition boxes, nose turret... ...	29
Ammunition boxes, Bristol mid-upper turret	30
Ammunition boxes, tail turret	31
Ammunition ducts	33
Alignment of duct	34
Feed assister...	35
ACCESS TO EQUIPMENT —	
Nose turret	36
Bristol 17 — mid-upper turret	37
Tail turret	38
REMOVAL AND REFITTING —	
Nose turret	39
Nose fairing	40
Mid-upper turret — Bristol 17	41
Tail turret	44

ILLUSTRATIONS

	Fig.
Nose turret — Boulton Paul type F ...	1
Mid-upper turret — Bristol type 17 (1)	2
Mid-upper turret — Bristol type 17 (2)	3
Rear turret — Boulton Paul type D ...	4
* Ammunition feeds and stowages ...	5
Ammunition ducts and boxes — type D turret	6
* Nose fairing and ballast weight... ...	7

* To be issued later.

Turrets

General

1. The aircraft is equipped with nose, mid-upper and tail turrets, electrically or electro-hydraulically operated. The electrical supply in each case is taken from the general services electrical supply, and is therefore dependent on the generators driven by the engines.

NOSE TURRET

2. A Boulton Paul, type F, Mk. I, turret (stores reference, R50A/142) is mounted in the fuselage nose above the air bomber's station. This turret is electro-hydraulically operated, and is fitted with two 0.5 in. Browning guns (stores reference, E2B/351). The installation is illustrated in Fig. 1. The turret is mounted in a ball bearing mounting ring, of which the fixed ring is bolted down to a supporting frame carried on the top ends of the nose formers. The controls, sight linkage and sight project into the air bomber's station, enabling him to operate the turret from his seat. The turret can be rotated to 45 deg. each side of the centre line of the aircraft, and the guns elevated or depressed 40 deg. above or below the plane of the turret ring. The remainder of the turret structure and equipment, including the ammunition boxes (but excepting the lower portions of the empties containers), is above the level of the mounting ring. For full descriptive notes and operating and servicing instructions, *see* A.P.2796H; description and operation notes on American machine guns are contained in A.P.1641L.

3. Behind the turret the space above the rear edge of the deck plating (*see* Fig. 1) is closed by a transverse draught screen. A door in the screen, in conjunction with doors in the rear of the cupola, provides access to the interior of the turret for servicing. A detachable fairing, secured at its bottom edges by screws to the aircraft nose, fits over the cupola and fairs the turret into the fuselage.

4. The electrical supply is taken from a circuit breaker, type B, in panel 3P in the fuselage centre section. From the starboard side of the nose the cable is carried along the supporting structure at the rear of the turret ring, and is connected, together with an earth lead, to a terminal block on the rear end of the port empty cartridge container. Sufficient slack is left to allow for the rotation of the turret. START and STOP press button switches, supplied through fuse VV5, which control the circuit breaker, are provided on the air bomber's starboard panel. All other switches and fuses are located on a panel in the lower forward part of the turret, within reach of the gunner. For the relevant routing chart, *see* Section 6, Chapter 1. For inspection purposes a standard inspection lamp, stowed on the air bomber's starboard panel, is available.

5. Until Modification 1226 and Modification 1227 are installed in the aircraft, it is not possible for the stabilised automatic bomb sight to be used when the nose turret is installed. When this bomb sight is required, the turret must be removed and a fairing and ballast weight substituted.

MID-UPPER TURRET

6. The mid-upper turret is a Bristol turret, armed with two 20 mm. Hispano No. 4, Mk. V, guns (stores reference, E7G/791).

7. This turret is electrically operated, and is mounted in the aircraft between formers 19 and 22, *i.e.*, above the rear end of the main floor over the bomb compartment. The turret ring is bolted to an aircraft deck plate in which a circular opening allows the lower part of the turret to project into the fuselage. A longeron on each side, an arched cross-member at formers 19 and 22, and diagonal channel stiffeners support the deck plate. Above the deck plate, bulkheads in the upper sections of formers 19 and 22 seal off the turret opening, and a draining outlet is provided on each side at the rear end of the deck plate. On the fuselage roof a small, detachable fairing is fitted.

8. An outlet in the hot air duct running aft on the starboard side of the fuselage is arranged to direct air into the turret when the control valve at the outlet is opened.

9. This turret, Bristol, type 17, Mk. I (stores reference, E50A/116), is illustrated in Figs. 2 and 3. Due to the size of the sub-structure, the passage way at the turret is restricted, and it is not possible to pass beneath it. The gangway on the starboard side should be used, in order to avoid the electrical and other service connections on the port side.

10. The turret is electrically operated, with alternative hand operation, except for the pneumatic cocking system, and can be rotated continuously through 360 deg. in either direction. Interruptor gear prevents the guns from damaging any part of the aircraft. The ammunition, 361 rounds per gun, is carried 51 rounds in the lead-up to the gun and 310 in each of the two fixed ammunition boxes. The links and spent cartridges are collected in two containers (*see* Fig. 2, and the relevant routing chart in Section 6, Chapter 1). No spare ammunition is carried.

11. The pneumatic cocking system is supplied with compressed air from a storage bottle at the bottom of the turret sub-structure. The system is independent of the aircraft pneumatic system, but can be charged from the latter in flight or on the ground. A supply from the aircraft system terminates, at former 20 on the starboard side, in a control valve and a flexible pipe, which can be attached to a charging unit on the turret.

12. One-half of the turret cupola is secured only by quick-release catches (*see* Fig. 2), and can be used as an emergency escape exit and for servicing.

13. The electrical power, intercommunication and oxygen services are introduced at a rotating turret joint, mounted at the bottom of the turret concentrically with the turret ring (*see* Figs. 2 and 3). The intercommunication socket is at the right of the gunner's seat. An external rotor contains the pick-up brushes which contact the slip rings on an internal stator, and the latter is prevented from rotating by a projecting fork which mates with a bracket mounted on the fuselage floor. The oxygen connection is made at the bottom of the stator, through which the turret supply pipe passes vertically to a swivel joint at its upper end.

14. The rotating service joint is made up of top, middle and bottom units (*see* Fig. 2), with the connections numbered upward from the bottom:—

Bottom unit.—Power supply (1 and 1A, positive; 2 and 2A, negative). Turret bonding (3 and 3A).

Middle unit.—Start and stop switches (5, 7 and 9). Press to transmit switch (10 and 12). Call lamp (14). Spares (4, 6, 8, 11, 13 and 15).

Top unit.—Intercommunication (Mic., 17 positive, 19 negative; Tel., 18 positive, 16 negative).

15. The main power supply is taken from a contact breaker, type B, in panel 3P in the fuselage centre section, and the supply to the START and STOP control buttons from a 5 amp. fuse, VV4, also in panel 3P (*see* relevant routing chart in Section 6, Chapter 1). START and STOP buttons are provided both in the turret and on the control panel, and it is therefore necessary for the circuits to be arranged as follows:—

(i) The START buttons wired in parallel, enabling either to make the circuit.

(ii) The STOP buttons wired in series, enabling either to break the circuit.

The switch on the control panel must therefore be OFF, as stated on the adjacent label. The resistance unit in this circuit passes only sufficient current to maintain the contact breaker in the "closed" position after it has been closed by the operation of the START button, and is introduced to give economical use of power. Main fuse box is at the lower centre of a panel forward of the gunner's seat.

16. For a complete description of the Bristol turret, type 17, Mk. I, *see* A.P.2768E.

TAIL TURRET

17. The tail turret, Boulton Paul, type D, Mk. I, Series 1 (stores reference, E50A/123), or Mk. I, Series 2 (stores reference, E50A/174), which forms the rear end of the fuselage, is armed with two 0.5 in. Browning guns (stores reference, E2B/351), and is electro-hydraulically operated. The turret can be

rotated to 85 deg. each side of fore-and-aft centre line, and the elevation-depression range is 45 deg. above or below the plane of the turret ring. The mounting consists of a ring which projects aft from former 41 and is supported by tubular struts. A fuselage end fairing in which access doors are provided encloses the lower part of the turret below the ring (*see* Fig. 4).

18. The turret is built up on a turntable, which is free to rotate on a fixed ring attached to the aircraft structure. Enclosed in a glazed structure above the turntable are the guns, with their mountings and sighting equipment, and the gunner's controls and seat. The sighting equipment is the Mk. IIc-G.G.S., and is also equipped with radar, A.G.L.T. (airborne gun lane in turrets). This equipment is used in conjunction with the gyro gun sight. Below are the electric motor and hydraulic generator assembly, the hydraulic motors for turret rotation and gun elevation and, at the lowest point, the slip ring unit. The latter includes the bottom roller unit, to which the ammunition ducts in the fuselage are attached.

19. Ammunition is carried in two boxes (1,110 rounds each) and two ducts (350 rounds each) leading from the boxes to the guns. The total ammunition for each gun is, therefore, 1,520 rounds approximately, including 60 rounds per gun in the turret itself. The boxes are bolted to bearers in the fuselage roof at formers 22B and 22D, just aft of the bomb floor (*see* Fig. 6), and the ducts extend aft on each side into the rear fuselage, passing above the main door on the starboard side and over the tail plane before dropping down to the bottom roller unit at the base of the turret. An auxiliary feed assister is fitted to each duct between formers 33 and 34, and is automatically controlled by the tightening or slackening of the ammunition belt in the duct.

20. The turret is provided with sliding doors behind the gunner, and the rear end of the fuselage is closed off by a pair of draught-proof doors. Hot air is introduced to the turret from the duct runing down the starboard side of the fuselage, and is controlled by a butterfly valve just forward of the turret.

21. Oxygen, intercommunication and electric power services are introduced at a rotatable slip ring unit at the base of the fuselage adjacent to the turret, and is opened by removing a wooden plug from the clip which would normally receive the end of the delivery pipe. An oxygen economiser and flowmeter are provided in the turret. The fixed portion of the rotatable gland joint below the slip ring unit is prevented from moving by the fixed delivery pipe.

22. The fixed portion of the slip ring unit carrying the rings is prevented from moving by the attachment of the ammunition ducts to the bottom roller unit, which forms part of the same assembly. The brush portion consists of two brush-holders, which rotate with the turret. The slip rings are identified by letters, and connect the following circuits (*see* Fig. 4):—

Main supply to turret (A positive, P negative).

Call lamps (C, E and G).

Intercommunication system (H, J, K and L).

Disengaging gear remote control, for casualty evacuation (M).

Auxiliary feed assister (N).

Available for position indicator but not used (B, D and F).

(*See* relevant routing chart in Section 6, Chapter 1.)

23. The main supply is duplicated, separate supplies being taken from two circuit breakers, type A, one in panel 2P and one in panel 3P in the fuselage centre section (*see* relevant routing chart, Section 6, Chapter 1). Supplies to the auxiliary feed assisters and the casualty evacuation control are taken from 3DB on the port side of the fuselage rear centre section (40 amp., fuse reference, TT3). The casualty evacuation control consists of a push button on the port side of the rearmost fuselage former (No. 41). If the gunner should become a casualty with the turret partially rotated, the driving mechanism can be disengaged by pressing the remote control button, and it is then possible to sit on the walkway forward of the turret and pull it round by hand.

24. A full description of the installation of the Boulton Paul, type D, turret in Lincoln aircraft is contained in A.P.2796J.

SERVICING

General

25. The front and mid-upper turrets draw ammunition from direct mounted boxes, but the rear turret supply is by means of ducts, leading from ammunition boxes, mounted in the fuselage roof. For detailed descriptions of turrets *see*:—

A.P.2796H—Boulton Paul type F.
A.P.2768E—Bristol type 17.
A.P.2796J—Boulton Paul type D.

Both Boulton Paul turrets are equipped with two guns of 0.5 in. calibre, and the Bristol turret type 17 Mk. I, which is fitted in the mid-upper position, is armed with two 20 m.m. Hispano No. 4 Mk. V guns (stores reference, E7G/791). For descriptive notes on—

American machine guns *see* A.P.1641L.
Hispano guns *see* A.P.1641F.

26. When an electrical supply is required in the course of ground servicing, an external supply must be connected to the ground socket on the starboard side of the fuselage just aft of the main plane. The capacity of the aircraft batteries is not adequate when the generators are not charging.

Ammunition Supply and Loading

27. Loading labels or stencilled notes which give instructions for loading ammunition into the boxes are provided on the boxes for the front and both types of mid-upper turret. Additional notes and instructions for loading the rear turret ammunition boxes are given in the following paragraphs.

28. A belt making and breaking tool (stores ref. D1E/35284) should be used for making and breaking the ammunition belts.

Ammunition Boxes, Nose Turret

29. Each of the two guns in the Boulton Paul type F, Mk. I nose turret is supplied from a detachable box with capacity of 230 rounds, mounted outboard of the two vertical members of the turret frame. Each belt is stowed in its box in end-folded layers and fed to the side of the gun chassis through a duct which incorporates a feed roller and a conical roller which imparts a 90 deg. twist to the belt. Removal of a draught-screen, attached by Oddie fasteners at the rear of the turret mounting, discloses two panels with Dzus fasteners. These panels form the rear contour of the turret cupola, and provide access for removal and replacement of ammunition boxes and for loading the guns. Spent cartridge cases and links are ejected into fixed containers, the lower portions of which are below the mounting ring level. These are emptied through quick-release doors (*see* Fig. 1).

Ammunition Boxes—Bristol Mid-Upper Turret

30. One fixed ammunition box containing 310 rounds is provided for each of the two guns, 51 additional rounds being carried in the lead-up to each gun. No spare ammunition is carried. Spent cartridge cases and links are ejected into a container (*see* Fig. 2). The empties container fits in sockets on the substructure of the turret, and its neck can be detached from the spent cartridge case chute by the latch-hooks at each side. The ammunition boxes are loaded from inside the turret. Raise the gunner's seat to the parked position, disengage the mouth plates of the spent cartridge case containers, and remove the lid of each ammunition box. The flaps hinged to the inner face of the outboard wall of each box should be raised. Load the front section of the box first, the first shell at the front of the box with its nose pointing outboard, placing the belt in layers. After loading three layers drop the lowest hinged flap to its horizontal position. This supports the noses of the next layers and prevents mis-alignment of the belting. Continue to load in layers, lowering a hinged flap between each set of two layers, until the belt is level with the top of the arched member which divides the box. Load the belt into the rear section and load from front to rear, but drop the lowest hinged flap after the first two layers and lower the upper flaps in turn between each succeeding pair of layers until the top layer is level with the arch, and with the belt leading forward. Lead the belt over the existing layers in the front section, lower the first long hinged flap, and load two more layers, then

bring the free end back and up through the feed mouth of the box. Lower the shorter top hinged flap, but do not load above it. The belt end must terminate with a double link.

Ammunition Boxes—Tail Turret

31. Ammunition for each gun on the Boulton Paul type D, Mk. I, Series 2, or Series 1, tail turret is supplied from a box in the fuselage rear centre section (*see* Fig. 6), through ducts leading from each box to the base of the turret. The two supply boxes are contained in a housing suspended from the fuselage roof between formers 22B and 22D. The outer side of each box is divided into panels by two horizontal piano hinges, the upper hinged panel being attached to the lower, enabling the opening section to be partially or completely folded down as required. Wing nuts retain the panels in the closed position. An ammunition loading door is located in the aircraft floor on the centre line of the aircraft, between formers 22 and 22A (*see* Fig. 6). The cartridge belts feed from the rear end of the boxes over rollers and a swan neck fitting, and are then guided along the channels of the ducts (*see* paragraph 33).

32. Each box contains approximately 1110 rounds. The ammunition belts are loaded in separate lengths which are joined up as the operation proceeds, and the lower section of the hinged side of the box is closed when loading has reached the level of its upper edge. In both boxes the ammunition should be layered with the bottom layer starting at the forward end and running aft, and the bullet noses pointing to starboard.

Ammunition Ducts

33. Ammunition is drawn by the tail turret guns from the ammunition boxes via channel-section ducts connecting the boxes with the turret. The two channel members comprising the ducting face inwards and are mounted to consecutive formers (22E to 31 inclusive) by suspension brackets, but from that point are supported by tubular stays on formers 32 to 36 inclusive. The ducts pass through slots in the supporting woodwork of the draught-exclusion doors at former 38, are supported by tubular stays at former 39, and converge downward to an aperture at the base of former 41, where the duct from the port side is uppermost (*see* Fig. 6). The duct rear ends are flanged for attachment to the turret belt guides, the belt then being drawn upward over rollers. The twin channels forming the ducts are jointed between formers 26-27, 29-30 at former 33, between formers 34 and 35, and have their final joint forward of former 41. These joints are formed at the abutment of the channels by flanged plates bolted through the top and bottom faces of the channels. Access points are provided in the inboard channel of the starboard duct and the outboard channel of the port duct at the following stations:—Between formers 28-29, 35-36, 36-37 and 38-39. Access is provided by a small door in the side wall of the channel, hinged at the forward end and retained by a looped pin at the rear. The channel structure is reinforced at such points by light gauge strip, making a box section spot welded around the channels. Approximately 350 rounds are contained in each duct and these are linked up, on loading, to 60 rounds (approximately) in the turret ducting for each gun.

Alignment of Duct

34. Alignment of duct channels, and freedom from obstruction, can be checked by running a length of belt with dummy cartridges along the full length of the duct. Care should be taken to see that no internal obstruction is caused by distortion of the ends of the channel members where jointed (*see* paragraph 33). Any interference at these points must be rectified.

Feed Assisters

35. Bristol 17 mid-upper turrets and the Boulton Paul tail turret incorporate a feed assister unit between the gun chassis supports, which lifts the ammunition belt to the gun breech. The basic principle is similar for each type, a motor driven shaft carrying a pair of wide pitch sprockets which engage the nose and case of each cartridge in turn and impel their travel when tension is applied to the belt, such tension causing a switch to close and thus start the motor. Independent fuses for each tail turret motor are mounted on each side above the control panel. The Boulton Paul tail turret supply is further

assisted by a pair of auxiliary feed assisters mounted one in each duct between formers 33 and 34. On the port side the operating motor is above the duct, but the starboard unit is below the duct channels. These auxiliary assisters have manually-operated "free" and "locked" position controls mounted in the units. The rate of feed of each ammunition belt adjusts itself to the pull of the gun. Each auxiliary feed assister has its own fuse mounted on the unit; removal is a simple matter of disconnecting the supply leads at each terminal block and removing nine nuts and bolts from each side of the mounting bracket.

ACCESS TO EQUIPMENT

Nose Turret

36. The detachable rear panels of the cupola give access to the electric motor and to the hydraulic jack for elevation and depression of the guns. (The flexible pipes and banjo connections of this jack can also be reached from below, looking up from the air bomber's position.) The main electrical connections are made on the port side of the base; all switches and fuse boxes are located on a control panel in front of the air bomber; oxygen supply is independent of the turret, being installed with the intercommunication and call-lamp services in the air bomber's compartment.

Bristol 17 Mid-Upper Turret

37. Power, intercommunication, call-lamp and oxygen connections are made at the base of the turret, on a stator-rotor assembly which forms a rotating joint (Fig. 3). The oxygen pipe union is at the bottom of the assembly and Breeze connections are made on the body of the rotor housing. The gun cocking system employs compressed air supplied from a bottle mounted below the turret under-structure. This bottle has two pipe connections, one to a filter and the other to a pressure gauge. From the latter pipe a T-piece provides connection to a charging union mounted with the gauge on a panel fixed to the rear vertical member of the turret structure. To charge the bottle from the aircraft compressed air services, centralize the turret with the guns pointing aft, and couple to the bottle a flexible pipe which leads from a control valve mounted on the rear face of former 20, 32 in. above floor level, on the starboard side. Inflate the bottle to 450 lb. per sq. in.

Tail Turret

38. Oxygen, power, intercommunication and call-lamp connections are accessible through an inspection door in the base and sides of the aircraft fairing which extends aft, under the turret mounting, from former 41 (Fig. 4). A fourth door, at the rear end of the aircraft, is uncovered when the turret is rotated to either side of the fore-and-aft position. These doors also give access to the electric motor, slip ring unit, hydraulic generator and bottom roller unit to which the ammunition ducts are attached. The oxygen control valve is in the fuselage, on the port side, just outside the turret, but the economiser and flowmeter are inside the cupola.

REMOVAL AND REFITTING

Nose Turret

39. The guns can be removed after a lever on the side of the chassis of each front mounting is unlocked. Before removing or refitting the turret, it is necessary to disconnect the control handles proper and to secure them to the control tubes to prevent fouling and possible damage. For detailed removal instructions *see* Fig. 1. Replacement is a reversal of the removal sequence. The fluid used in the system is: Fluid, aircraft hydraulic, mineral base, D.T.D.585 (stores ref. K2/138). Six pints approximately will be required if the system has been drained.

Nose Fairing

40. A nose fairing and balance weight can be fitted in place of the nose turret.

Mid-Upper Turret—Bristol 17

41. Instructions for the removal of this turret are given in Fig. 3. The following is the procedure for removing the guns as required therein:—

(i) After removing the emergency escape panel (see Figs. 2 and 3) ensure that the gun is unloaded and detach the belt feed mechanism as described in A.P.1641F, Vol. I, Chap. 11, paragraph 22.

(ii) Disconnect the banjo union of the gun cocking system from the adaptor on the gun body.

(iii) Detach the electric cable from the gun firing solenoid by unscrewing the knurled gland nut and removing the socket.

(iv) Detach the bridge piece from the gun mounting cradle by slackening the two knurled nuts.

(v) Unscrew the recoil spring buffer stops and slide the gun backward until the four splines on the gun body are disengaged from the slides in the gun mounting cradle.

(vi) Lift the gun clear of its cradle and draw it backward until clear of the draught excluder seal.

(vii) Replace the bridge piece on the gun cradle.

42. Instruction labels in the turret indicate the method of rotating the turret and elevating the gun cradles manually. When the hand operation mechanism is no longer required the knob of each disengaging mechanism must be slowly returned to its IN position, and the hand operation handle moved in each direction until the clutch is fully engaged. When this occurs the hand operation handle will no longer operate the drive. The handle must then be removed and stowed in its spring clips at the rear of the turret mounting ring.

43. Installation of the turret is a reversal of the removal sequence.

Tail Turret

44. Auxiliary equipment is mounted at the rear of the turret. To remove the fairings of this auxiliary unit, detach the lowermost fairing first. This is held by four 2 B.A. bolts and anchor nuts, which can be reached through an access hole immediately aft. Detachment of the upper fairing by removal of the three uppermost bolts through the armour plating will disclose six Breeze plugs mounted in two groups of three each on angle brackets attached to the turret rear armour plating, and also the three 5/16 in. bolts each side holding the castings forming the upper side members of the auxiliary unit to lugs formed at the base of the turret just above the mounting ring (Fig. 4). Then withdraw the pip-pin and disconnect spring clip and tubular stay at port side of rear armour plate; disconnect aerial feeder aft of former 40 and withdraw it with great care from fuselage; then remove unit complete. The oxygen and electrical services and the ammunition ducts can then be disconnected and the turret removed as shown in Fig. 4. Re-installation is a reversal of the above sequence. Fluid for the hydraulic system is: Fluid, aircraft hydraulic, mineral base, D.T.D.585 (stores ref. K2/138); the system contains 5 pints approximately.

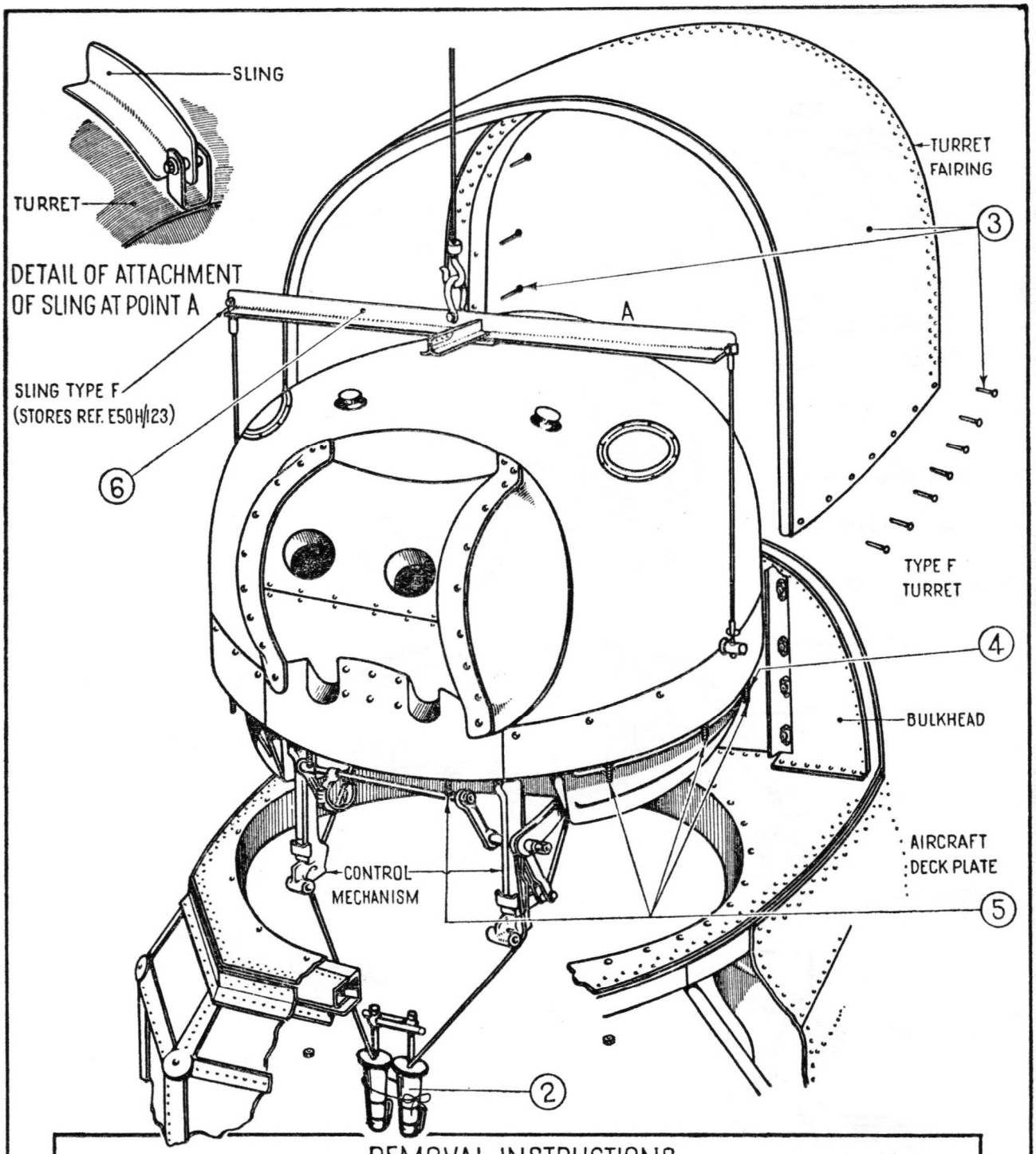

REMOVAL INSTRUCTIONS

1 SWITCH OFF POWER AT TURRET SUPPLY PANEL- STARBOARD SIDE OF AIRCRAFT.

2 DETACH THE CONTROL HANDLES.

3 UNSCREW, UNBOLT AND REMOVE FAIRING.

4 DISCONNECT TURRET SUPPLY LEADS AT TERMINAL BLOCK AFT OF PORT EMPTIES CONTAINER.

5 REMOVE NUTS FROM TWELVE HOLDING DOWN BOLTS ON TURRET RING (8 LONG BOLTS FORWARD AND 4 SHORT BOLTS AFT.)

6 ATTACH SLING TYPE F (STORES REF. E 50H/123) AND REMOVE TURRET FROM AIRCRAFT GREAT CARE MUST BE TAKE TO ENSURE THAT CONTROL MECHANISM DOES NOT FOUL SUPPORT STRUCTURE.

1	NOSE TURRET-BOULTON PAUL TYPE F	1

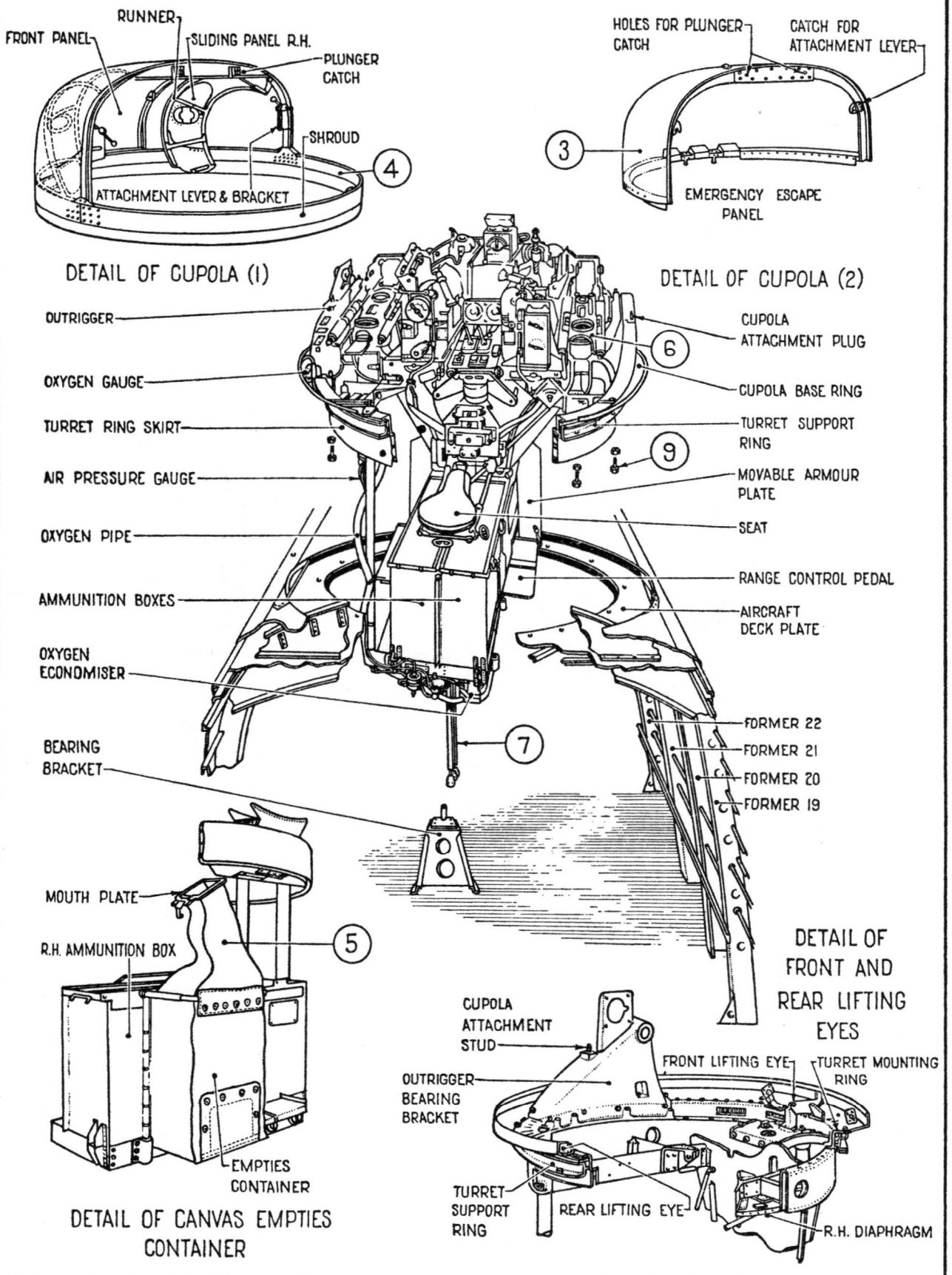
RUNNER
FRONT PANEL
SLIDING PANEL R.H.
PLUNGER CATCH
SHROUD
4
ATTACHMENT LEVER & BRACKET
DETAIL OF CUPOLA (1)
HOLES FOR PLUNGER CATCH
CATCH FOR ATTACHMENT LEVER
3
EMERGENCY ESCAPE PANEL
DETAIL OF CUPOLA (2)
OUTRIGGER
OXYGEN GAUGE
TURRET RING SKIRT
AIR PRESSURE GAUGE
OXYGEN PIPE
AMMUNITION BOXES
OXYGEN ECONOMISER
BEARING BRACKET
CUPOLA ATTACHMENT PLUG
6
CUPOLA BASE RING
TURRET SUPPORT RING
9
MOVABLE ARMOUR PLATE
SEAT
RANGE CONTROL PEDAL
AIRCRAFT DECK PLATE
FORMER 22
FORMER 21
FORMER 20
FORMER 19
7
MOUTH PLATE
R.H. AMMUNITION BOX
5
EMPTIES CONTAINER
DETAIL OF CANVAS EMPTIES CONTAINER
DETAIL OF FRONT AND REAR LIFTING EYES
CUPOLA ATTACHMENT STUD
OUTRIGGER BEARING BRACKET
FRONT LIFTING EYE
TURRET MOUNTING RING
TURRET SUPPORT RING
REAR LIFTING EYE
R.H. DIAPHRAGM

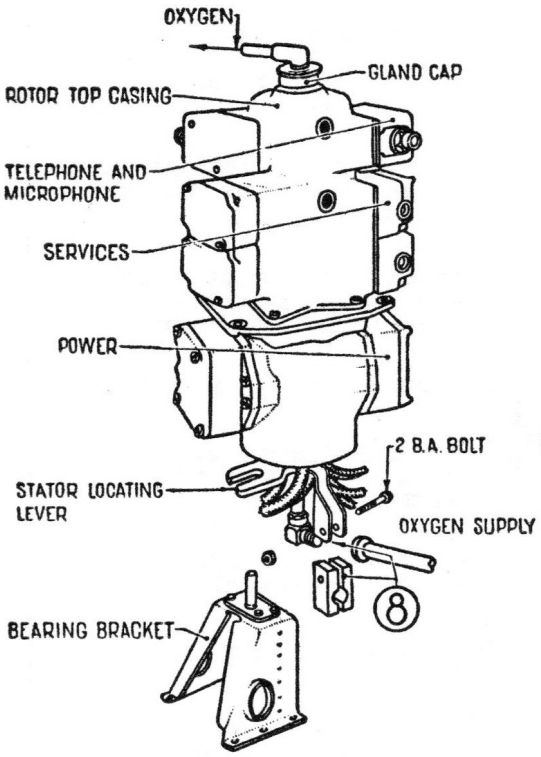

DETAIL OF ROTATING SERVICE JOINT

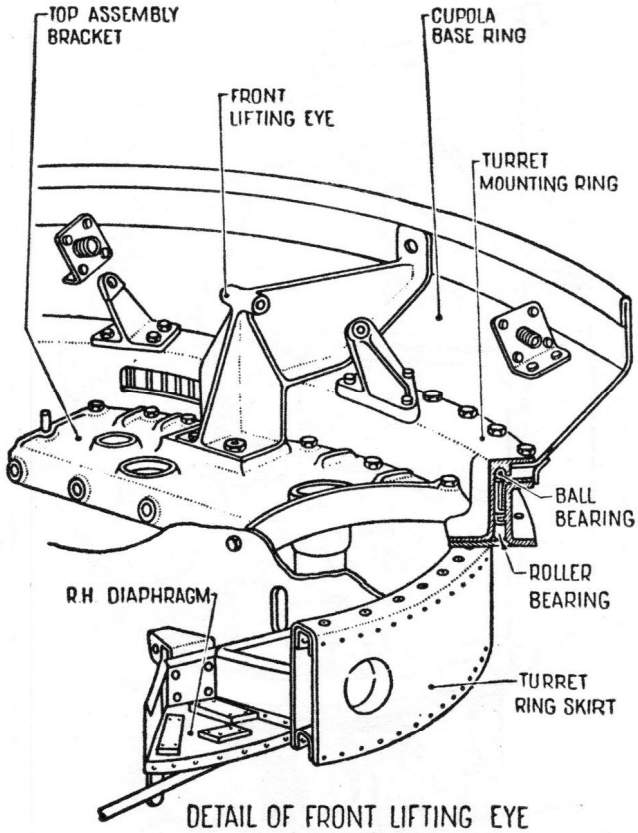

DETAIL OF FRONT LIFTING EYE LOCATION. (REAR LIFTING EYE OPPOSITE)

REMOVAL INSTRUCTIONS

1 IT IS PREFERABLE, THOUGH NOT ESSENTIAL, TO RAISE AND SUPPORT TAIL SO THAT AIRCRAFT IS IN FLYING POSITION BEFORE TURRET IS REMOVED.

2 REMOVE ALL AMMUNITION FROM TURRET AND REMOVE GUNS. (SEE PARAGRAPH 41 OF THIS CHAPTER.)

3 REMOVE EMERGENCY ESCAPE PANEL FROM CUPOLA BY PULLING DOWN TWO KNOBS, ONE ON EACH SIDE, AND THEN PUSHING FORWARD TWO SIMILAR KNOBS AT TOP.

4 DETACH CUPOLA BY REMOVING TWO $\frac{1}{2}$ INCH B.S.F. NUTS AND WASHERS FROM TWO CUPOLA ATTACHMENT STUDS, ONE ON EACH SIDE OF OUTRIGGER BEARING BRACKETS, AND TWO $\frac{1}{4}$ INCH B.S.F. BOLTS AT FRONT AND REAR OF CUPOLA BASE RING, RAISE AND REMOVE CUPOLA.

5 DETACH NECKS OF EMPTIES CONTAINERS BY PULLING BACK LATCH HOOKS ON EACH SIDE. REMOVE EMPTIES CONTAINERS BY LIFTING OUT OF ENGAGEMENT WITH SOCKETS ON UNDERSTRUCTURE.

6 FULLY ELEVATE GUN CRADLES BY HAND MECHANISM

7 DISCONNECT THREE BREEZE PLUGS FROM THEIR SOCKETS

8 DISCONNECT AIRCRAFT OXYGEN SUPPLY PIPE FROM ELBOW UNION ON TURRET OXYGEN PIPE BY UNSCREWING UNION NUT. ALSO DETACH PIPE CLAMP SUPPORT BRACKET FROM OXYGEN SUPPLY PIPE IN AIRCRAFT.

9 REMOVE TWELVE FIXING BOLTS SECURING TURRET TO AIRCRAFT DECK PLATE.

10 ATTACH SLING TYPE K (STORES REF. E50 H/227) RAISE AND REMOVE TURRET.

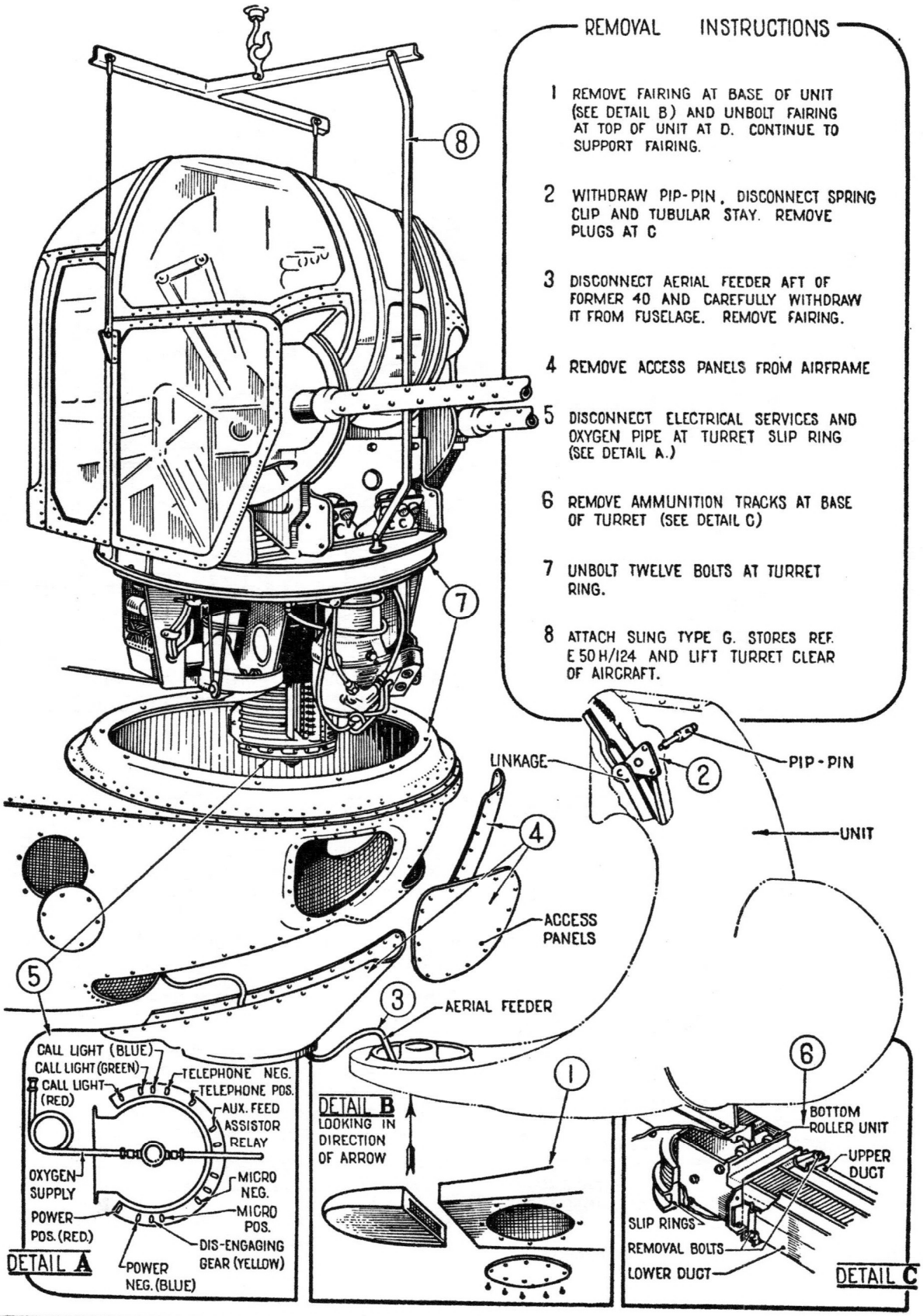
REMOVAL INSTRUCTIONS
1 REMOVE FAIRING AT BASE OF UNIT (SEE DETAIL B) AND UNBOLT FAIRING AT TOP OF UNIT AT D. CONTINUE TO SUPPORT FAIRING.
2 WITHDRAW PIP-PIN, DISCONNECT SPRING CLIP AND TUBULAR STAY. REMOVE PLUGS AT C
3 DISCONNECT AERIAL FEEDER AFT OF FORMER 40 AND CAREFULLY WITHDRAW IT FROM FUSELAGE. REMOVE FAIRING.
4 REMOVE ACCESS PANELS FROM AIRFRAME
5 DISCONNECT ELECTRICAL SERVICES AND OXYGEN PIPE AT TURRET SLIP RING (SEE DETAIL A.)
6 REMOVE AMMUNITION TRACKS AT BASE OF TURRET (SEE DETAIL C)
7 UNBOLT TWELVE BOLTS AT TURRET RING.
8 ATTACH SLING TYPE G. STORES REF. E 50 H/124 AND LIFT TURRET CLEAR OF AIRCRAFT.
LINKAGE
PIP-PIN
UNIT
ACCESS PANELS
AERIAL FEEDER
CALL LIGHT (BLUE)
CALL LIGHT (GREEN)
CALL LIGHT (RED)
TELEPHONE NEG.
TELEPHONE POS.
AUX. FEED ASSISTOR RELAY
OXYGEN SUPPLY
MICRO NEG.
MICRO POS.
POWER POS. (RED.)
DIS-ENGAGING GEAR (YELLOW)
POWER NEG. (BLUE)
DETAIL A
DETAIL B
LOOKING IN DIRECTION OF ARROW
BOTTOM ROLLER UNIT
UPPER DUCT
SLIP RINGS
REMOVAL BOLTS
LOWER DUCT
DETAIL C

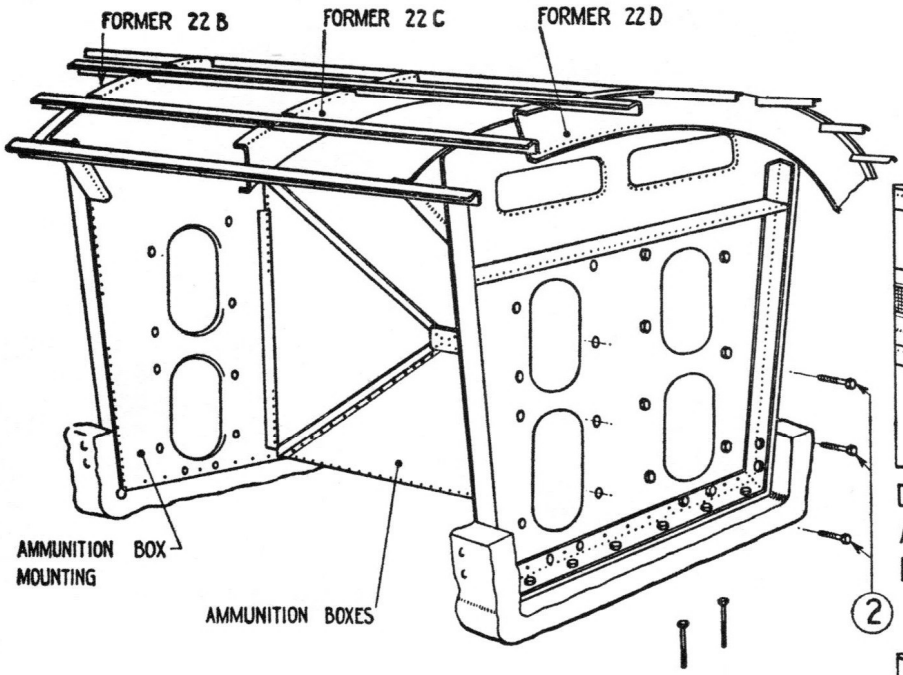

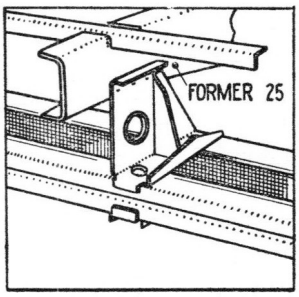

DETAIL OF A TYPICAL ATTACHMENT OF AMMO. DUCTS AT FORMER 25

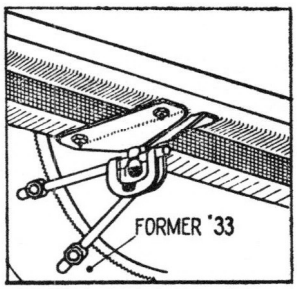

DETAIL OF A TYPICAL ATTACHMENT OF AMMO. DUCTS AT FORMER 33

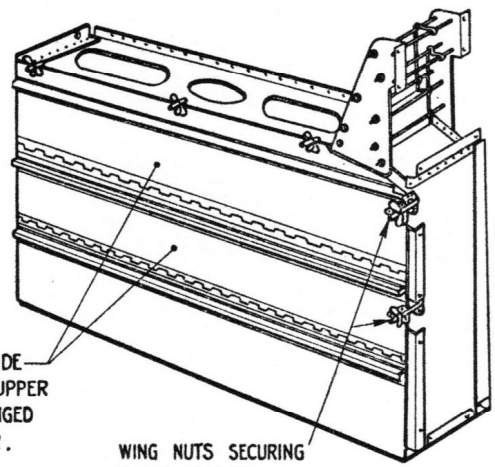

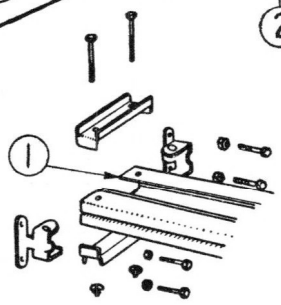

REMOVAL INSTRUCTIONS FOR AMMUNITION BOXES

1. UNBOLT CLAMPS AND CLIPS FROM SWAN NECK OF AMMUNITION BOXES AND REMOVE AMMUNITION DUCTS.
2. REMOVE BOLTS FROM AMMUNITION BOX MOUNTINGS AND REMOVE BOXES. FOR CLARITY 3 BOLTS ONLY ARE SHOWN.

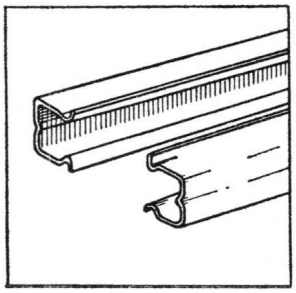

VIEW SHOWING SECTION THROUGH AMMUNITION DUCT

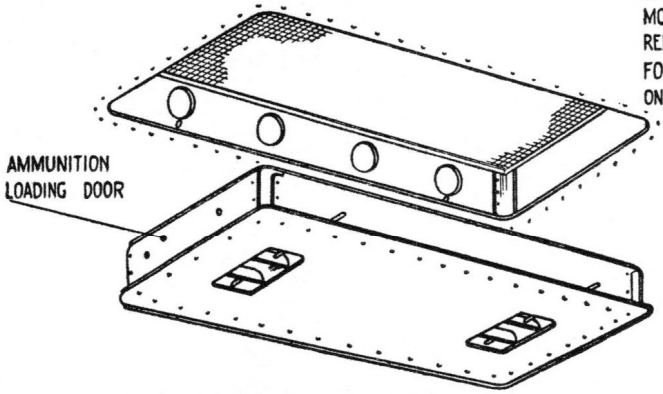

AMMUNITION LOADING DOOR LOCATED BETWEEN FORMERS 22 & 22A IN CENTRE OF AIRCRAFT FLOOR

6	AMMUNITION DUCTS & BOXES - TYPE D TURRET	6

ALPHABETICAL INDEX

"A"	Sect.	Chap.	Para.	Illus.
Access and Inspection Panels ...	4	3	—	4
Access Doors Fuel Tank	7	2	30	—
Access to Electrical Components...	6	1	7	—
A.C. Supply—Radio...	10	2	3	—
Adjustment Bomb Doors	4	3	99	—
Adjustment Landing Lamp... ...	4	3	98	—
Adjustment Main Wheel Units ...	4	3	80–82	—
Aerial, Fixed...	4	3	101	—
Aerial System	10	2	8	—
Aileron	7	2	33	—
Aileron	5		—	24–25
Aileron	7	2	—	6
Aileron Balance Tab	1		41	—
Aileron Balance Tab	7	2	35	—
Aileron Balance Tab	7	4	12	—
Aileron Controls	1		37	—
Aileron Controls	7	4	4	1
Aileron Tab Controls	7	4	11–12	6
Aileron Trimming Tab	7	2	34	—
Aileron Trimming Tab	7	4	11	—
Aileron Mass-balancing	4	3	24	—
Air Bomber's Auto Control Panel	3		13	—
Air Bomber's Panel...	3		14	—
Air Bomber's Seat	7	1	22	—
Air Bomber's Station	3		12	—
Air Bomber's Station	12	1	4	1–2–3
Air Bomber's Window—De-icing...	3		18	—
Air Charging...	9		25	—
Air Cleaner	8		34	—
Air Cleaner	9		24	—
Air Cleaner Control	6	1	24	20
Air Cleaner Control	10	1	18	—
Air Cleaner Switch...	1		31	—
Air Emergency Undercarriage and Flaps	9		—	2
Air Intakes. Hot and Cold ...	1		32	—
Air Intakes. Hot and Cold ...	6	1	23	20
Air Intakes. Hot and Cold ...	9		23	—
Air Intakes. Hot and Cold ...	10	1	20	—
Air/Sea Rescue Equipment, Type Q Dinghy	2		19	—
Air System. Emergency	4	3	—	21
Alighting Gear	4	3	65–94	—
ALIGHTING GEAR...	7	5	—	—
Alighting Gear Maintenance Tools	4	3	—	32–42
A.M.U., A.P.I. and G.P.I.	6	1	—	40
A.M.U., A.P.I. and G.P.I.	10	1	53	—
Ammunition Boxes, Bristol Mid-upper Turret	12	2	31	—
Ammunition Boxes, Nose Turret...	12	2	29	—
Ammunition Boxes, Tail Turret ...	12	2	31	—
Ammunition Ducts	12	2	33	—
Ammunition Ducts and Boxes, Type D Turret	12	2	—	6
Ammunition Supply and Loading Turrets	12	2	27	—
A.P.I., A.M.U. and G.P.I.	6	1	—	40
A.P.I., A.M.U. and G.P.I.	10	1	53	—
A.R.I. 5131 Demolition	6	1	56	—
Armour Plating	8		48	—
Asbestos Gloves	2		26	—
A.S.I. System...	11		6	—
A.S.I. System Draining	4	3	97	—
ASSEMBLY, DISMANTLING AND REMOVAL OPERATIONS ...	5		—	—
Assembly Panels	5		—	4
Auto Control Panel. Air Bomber's	3		13	—
Automatic Controls. Setting ...	4	3	22	11
Automatic Pilot	6	1	52	—
Automatic Pilot	10	1	52	—

"A" (*continued*)	Sect.	Chap.	Para.	Illus.
Automatic Pilot	11		1	1
Auxiliaries. Engine...	8		—	13
Auxiliaries. Gearbox—Inboard ...	5		—	12–13
Auxiliaries. Gearbox—Outboard...	5		—	11
Auxiliary Fuel System	1		10	—
Auxiliary Fuel System	4	3	—	13

"B"				
Backward Towing	4	2	4	—
Balance Tabs—Aileron	1		41	—
Balance Tabs—Aileron	7	2	35	—
Balance Tabs—Aileron	7	4	12	—
Balance Tabs—Elevator	1		40	—
Balance Tabs—Elevator	7	3	6	—
Balance Tabs—Elevator	7	4	9	—
Bleeding Hydraulic System ...	4	3	50–52	—
Bomb Bay and Equipment... ...	12	1	6	—
Bomb Carriers	12	1	11	—
Bomb Carriers Adaptors	12	1	10	—
Bomb Compartment Data... ...	12	1	—	6–7
Bomb Doors...	5		—	42
Bomb Doors...	7	1	18	8
Bomb Doors Circuit	9		10	2
Bomb Doors, Emergency Opening of	9		11	—
Bomb Doors Lever...	1		17	—
Bomb Doors, Opening the ...	12	1	23	—
Bomb Doors, Hydraulic System ...	4	3	56	—
Bomb Doors, Method of Adjusting...	4	3	99	—
Bomber's Auto Control Panel ...	3		13	—
Bomber's Panel	3		14	—
Bomber's Station	3		12	—
Bomber's Station	12	1	4	1–2–3
Bomber's Window—De-icing ...	3		18	—
BOMBING EQUIPMENT	12	1	—	—
Bombing Up...	12	1	23	—
Bomb Fuzing and Release	10	1	58	—
Bomb Fuzing and Release, Location Diagrams	6	1	—	2, 29, 35
Bomb Gear	6	1	60	—
Bomb Gear Housing	12	1	22	—
Bomb Heavy, Crutching and Fuzing	12	1	—	8
Bomb Release Equipment	12	1	19	—
Bomb Sights	12	1	5	4
Bomb Sights and Auto Controls	6	1	—	43
Bomb Sights and D.R. Compass	10	1	50	—
Bomb Sight Equipment	12	1	17	—
Bomb Sighting Head. (Mk.XIVA) Supply	6	1	55	—
Bomb Sight Mk.XIVA and Computor	12	1	21	—
Bomb Slip Heater Supply	6	1	50	—
Bonding and Screening	6	1	62	—
Booster Coils	6	1	21	—
Booster Coils and Ignition ...	10	1	11	—
Booster Ignition and Engine Starter	6	1	—	15
Boost Cut-out Control	4	3	45	—
Boost Gauges	8		19	—
Boulton Paul Type D, Rear Turret	6	1	59	42
Boulton Paul Type D, Rear Turret	12	2	—	4
Boulton Paul Type F, Nose Turret	6	1	57	—
Boulton Paul Type F, Nose Turret	12	2	—	1
Brakes System	9		19	—
Bristol Type 17, Mid-upper Turret	6	1	58	—
Bristol Type 17, Mid-upper Turret	12	2	37 & 41	2–3

ALPHABETICAL INDEX — *(continued)*

"C"	Sect.	Chap.	Para.	Illus.
Cabin Heating System	11		9	4
Cables and Conduits (elect.)	6	1	13	—
Call Lamps	6	1	48	33
Call Lamps	10	1	42	—
Camera Station	3		11	—
Camera Supply and Heating	6	1	—	38
Camera Supply and Heating	10	1	44	—
Canopy	7	1	19	4
Cartridge Stowage	2		29	—
CENTRE GRAVITY AND LOADING DATA	4	1	—	—
Centre Plane	7	2	20	1
Centre Plane Trailing Edge	5		—	28
Centre Section Trailing Edge. Main Plane	7	2	—	5
Charging, Air	9		25	—
Chutes, Flare	3		38	—
Chutes, Flare	10	1	60	—
Circuit Breakers and Fuzes	6	1	12	—
Circuit Electrical Diagrams	6	1	6	3–44
Cleaner, Air	8		34	—
Cleaner, Air	9		24	—
Cleaning Hydraulic Fluid Filter	4	3	64	—
Closet—Sanitary	4	3	103	—
Cock Controls. Engine and Fuel	4	3	43–46	—
Cocks. Fuel	8		12	—
Cockpit Emergency Lighting	1		24	—
Cockpit Heating	3		2	—
Cock, Master Engine	1		6	—
Computor and Mk.XIVA Bomb Sight	12	1	21	—
Conduits and Cables (elect.)	6	1	13	—
Cold and Hot Air Intakes	6	1	23	—
Cold and Hot Air Intakes	8		35	—
Cold and Hot Air Intakes	9		23	—
Cold and Hot Air Intakes	10	1	20	—
Compass. Swinging D.R.	4	3	102	—
Contents Indicators (fuel)	6	1	37	25
Contents Fuel Gauges	10	1	28–29	—
Construction Fuselage	7	1	2	—
CONTROLS AND EQUIPMENT AT CREW STATIONS	3		—	—
Control Cocks. Fuel	4	3	39	14–15
Control Column	7	4	2	—
CONTROLS — EMERGENCY	2		—	—
Controls Emergency Pilot's Panel	2		2	—
Controls Engine	8		27, 36	—
Controls Engine Cockpit	8		—	2–3
Controls Engine Fuselage	8		—	3–6
Controls Fuel Cock	8		31	—
Controls—Gearbox. Trimming Tab	7	4	7	9
CONTROL. FLYING	7	4	—	—
Control Handle Flaps	1		18	—
Control Handle Fuel Jettison	1		20	—
Control Lever Undercarriage	1		16	—
Control Locking Gear Flying	4	2	8	3
Control Panel Air Bomber's Auto	3		13	—
CONTROLS — PILOT'S	1		—	—
Controls Setting— Inboard and Outboard Engines	4	3	—	16–17
Controls. Supercharger	8		32	—
Controls. Supercharger	10	1	22	—
Controls. Surfaces	4	3	—	10
Coolant System	2		9	—
Coolant System	4	3	36–38	—
Cooling System	8		37	—
Cooling System. Draining	4	2	14	—
Cooling System. Draining	4	3	36	—
Cooling System. Filling	4	3	38	—
Cooling System. Topping Up	4	2	13	—
Covers	4	2	7	2

"C" (*continued*)	Sect.	Chap.	Para.	Illus.
Cover—Front Spar	5		—	34
Cowlings. Engine	8		39–42	—
Cowlings. Engine and Radiator	5		—	6
Cross Feed Cock	1		7	—
Cross Feed Cock Fuel	3		23	—
Crutching and Fuzing for Heavy Bombs	12	1	—	8
Cut-off, Slow-running	6	1	22	20
Cut-out, Slow-running	8		33	—
"D"				
D.C. Power Supply and Distribution	10	1	3	—
Deflating Main Wheel Shock-absorber struts	4	3	75	—
Deflating Tail Wheel Shock-Absorber Struts	4	3	89	—
De-icing for Air Bomber's Window	3		18	—
Demolition and Radio Supplies	10	1	49	—
Demolition A.R.I. 5131	6	1	56	41
Demolition Radio Switches	2		15	—
Dinghy	2		—	3–7
Dinghy Release	6	1	54	29
Dinghy Release	10	1	47	—
Dinghy, Type K	2		22	—
Dinghy, Type Q	2		19	—
Dipsticks	4	2	10	—
Direct Vision Windows	1		50	—
Dismantling Main Wheel Shock-absorber Struts	4	3	76	—
DISMANTLING, REMOVAL AND ASSEMBLY OPERATIONS	5		—	—
Dismantling Tail Wheel Shock-absorber Strut	4	3	90	—
Distribution and Supply (elect.)	6	1	16	—
Distribution boxes (elect.)	6	1	8	—
Distribution Radial Feeder (elect.)	6	1	17	—
Distributor Fuel Tank	8		—	10
Doors	1		51	—
Doors. Method of Setting Main Wheel Unit	4	3	82	—
Draining A.S.I. System	4	3	97	—
Draining Cooling System	4	3	36	—
Draining Distributor Tanks	4	3	31	—
Draining Fuel, Oil and Cooling Systems	4	2	14	—
Draining Fuel Tanks	4	3	30	—
Draining Oil Tanks	4	3	33	—
D.R. Compass	6	1	—	39
D.R. Compass and Bomb Sights	10	1	50	—
D.R. Compass Swinging	4	3	102	—
"E"				
Electrical (bombing) System	12	1	12	—
Electrical Circuit Breakers and Fuzes	6	1	12	—
Electrical Components. Access to	6	1	7	1
Electrical Conduits and Cables	6	1	13	—
Electrical D.C. Power Supply and Dist.	10	1	3	—
Electrical Diagrams	6	1	2–6	3–44
Electrical Distribution Boxes	6	1	8	—
Electrical Earth Points	6	1	9	—
Electrical Equipment. Location of	6	1	—	1
Electrical Fuel Pump	1		8	—
Electrical Harness	6	1	10	—

ALPHABETICAL INDEX — *(continued)*

"E" *(continued)*	Sect.	Chap.	Para.	Illus.
ELECTRICAL INSTALLATION ...	10	1	—	—
Electrical Power Supply	6	1	14	—
Electrical Priming System	4	2	11	—
Electrical Routing Charts	6	1	5	14–44
ELECTRICAL SERVICING	6	1	—	—
Electrical System	1		23	—
Electrical System Details	6	1	7–15	—
Electrical Terminal Blocks	6	1	11	—
Electrical Voltage Regulators ...	6	1	15	—
Elevator	7	3	—	4
Elevator Balance Tabs	1		40	—
Elevator Balance Tabs	7	3	6	—
Elevators and Rudders	4	3	19	—
Elevator Controls	1		38	—
Elevator Controls	7	4	5	2
Elevator Mass Balancing	4	3	25	—
Elevator Removal	5		—	39
Elevator Tab Controls	7	4	8–9	7
Elevator Trimming Tab	7	3	5	—
Emergency Air System	4	3	—	21
Emergency Cockpit Lighting ...	1		24	—
EMERGENCY CONTROLS, EQUIPMENT AND EXITS	2		—	—
Emergency Controls, Pilot's Panel	2		2	—
Emergency Equipment Container, Type Q, Dinghy	2		—	7
Emergency Opening of Bomb Doors	9		11	—
Emergency Operation Fuel Jettison	9		16	—
Emergency System—Flaps and Main Wheels	9		7	2
Engine and Fuel Cock Controls ...	4		43–46	—
Engine and Radiator Cowlings ...	5	3	—	6
Engine and Secondary Controls—Fuselage	8		—	1
Engine and Secondary Controls—Main Plane...	8		—	7
Engine Auxiliaries	8		—	13
Engine Changing Gantry	5		—	7
Engine Controls	1		26–32	—
Engine Controls	8		27–36	—
Engine Controls—Cockpit	8		—	2–3
Engine Controls—Fuselage... ...	8		—	4–5–6
Engine Controls—Setting	4		—	16–17
Engine Cowlings and Fairings ...	8	3	39–42	—
Engine Installation	4		29–46	—
Engine Master Cock	1	3	6	—
Engine Priming	6		27	28
Engine Priming	10	1	21	—
Engine Speed Indicators	6	1	36	23
Engine Speed Indicators	10	1	34	—
Engine Starter, Booster and Ignition	6	1	—	15
Engine Starting	10	1	10	—
Engine Sub-frame	8	1	46	14
Engine Sub-frame Attachment ...	7		28	—
Engine Sub-frame Inboard	5	2	—	18–19
Equipment—Air/Sea Rescue, Type Q, Dinghy	2		19	—
EQUIPMENT AND CONTROLS AT CREW STATIONS	3		—	—
EQUIPMENT EMERGENCY CONTROLS AND EXITS	2		—	—
EQUIPMENT INSTALLATION ...	11		—	—
Equipment, Location of	3		—	1
EXITS, EMERGENCY CONTROL AND EQUIPMENT	2		—	—
Exits in Roof...	2		24	—
Exits, Parachute	2		16	—
Exterior Lamps	10	1	36	—
Extinguishers (bottles). Fire ...	10	1	15	—
Extinguishers Fire	2		11	2
Extinguishers Hand Fire	2		14	—
Extinguishers (lamps). Fire ...	10	1	14	—

"F"				
Faults and their Remedies—Hydraulic System	4	3	62	31
Feathering Propeller	6	1	19	16
Feathering Propeller	10	1	12	—
Feathering Tests. Propeller ...	4	3	95	—
Feed Assister...	12	2	35	—
Filling Cooling System	4	3	38	—
Filling Hydraulic System	4	3	49	—
Filling Shock-absorber Strut Main Wheel	4	3	77	—
Filling Shock-absorber Strut Tail Wheel	4	3	92	—
Filter. Cleaning Hydraulic ...	4	3	64	—
Filter. Cleaning Oil	4	3	35	—
Filter. Oil	8		26	—
Fins	5		—	38
Fins	7	3	7	2
Fins and Rudders	4	3	15	—
Fins to Tail Plane Mounting... ...	7	3	—	3
Fire Extinguishers	2		11	2
Fire Extinguishers	6	1	38	17
Fire Extinguishers (bottles) ...	10	1	15	—
Fire Extinguishers (hand)	2		14	—
Fire Extinguishers (lamps)... ...	10	1	14	—
Fireman's Axes	2		25	—
Firewall	8		47	—
Firewall Details	5		—	9
First Aid Outfit	2		27	—
First Pilot's Seat	7	1	20	—
Fixed Aerial	4	3	101	—
Flaps	4	3	18	—
Flaps	5		—	26
Flaps	7	2	36	7
Flaps and Undercarriage Operation	2		3	—
Flaps Circuit. Bleeding Hydraulic System	4	3	52	—
Flaps Circuit. Hydraulic System...	9		6	—
Flaps Control Handle	1		18	—
Flaps Emergency System	9		7	—
Flap Hydraulic Jack...	5		—	43
Flap Hydraulic System	4	3	55	19
Flap Indicator	1		19	—
Flap Indicator	6	1	33	29
Flap Indicator	10	1	33	—
Flap Radiator...	6	1	25	21
Flap Radiator...	9		20	—
Flap Radiator...	10	1	16	—
Flare Chutes	3		38	—
Flare Chutes	10	1	60	—
Flare Chutes Mk. III	6	1	53	—
Flare Chutes Mk. V...	6	1	—	36
Flare Stowage	3		39	—
Flight-Engineer's Instrument Panel	3		21	3
Flight-Engineer's Station	3		20	—
Floors	7	1	—	6
Flowmeters. Fuel	6	1	29	19
Flowmeters. Fuel	10	1	25	—
Fluid Level Check, Main Wheel Shock-absorber Strut	4	3	72	—
Fluid Level Check, Tail Wheel Shock-absorber Strut	4	3	86	—

ALPHABETICAL INDEX — *(continued)*

"F" *(continued)*	Sect.	Chap.	Para.	Illus.
FLYING CONTROLS	7	4	—	—
Flying Controls and Instruments	1		—	2
Flying Controls Locking Gear ...	1		42	—
Flying Controls Locking Gear ...	4	2	8	3
Flying Controls. Setting of ...	4	3	16–22	—
Folding Q Type Dinghy	2		—	5
Former Positions and Inspection Panels	4	3	2	5
Forward Stowing	4	2	3	—
Front and Rear Spar Joints, Outer Plane to Intermediate Plane ...	5		—	33
Front Centre Section	7	1	5	—
Front Spar Cover	5		—	34
Front Turret...	12	2	39	1
Front Turret B.P. Type F... ...	6	1	57	—
Fuel and Engine Cock Controls ...	4	3	43–46	—
Fuel and Oil	1		4	—
Fuel Cocks	8		12	—
Fuel Cock Controls...	4	3	46	—
Fuel Cock Controls...	8		31	—
Fuel Cock Control Setting ...	4	3	—	15
Fuel Cock Details	4	3	—	14
Fuel Contents Gauges	6	1	—	25, 30
Fuel Contents Gauges	10	1	28	—
Fuel Contents Gauges (long range tanks)	10	1	29	—
Fuel Control Cocks...	4	3	39	—
Fuel Cross-feed Cock	3		23	—
Fuel Distributor Tank	8		—	10
Fuel Distributor Tank and Pulsometer Pumps	5		—	14
Fuel Flowmeters	6	1	29	19
Fuel Flowmeters	10	1	25	—
Fuel Jettison	2		6	—
Fuel Jettison Control Handle ...	1		20	—
Fuel Jettison System	4	3	57	—
Fuel Jettison System	9		12	—
Fuel Jettison Valve. Resetting ...	4	3	61	—
Fuel Oil and Cooling Systems ...	4	3	29–38	—
Fuel Oil and Cooling Systems. Draining	4	2	14	—
Fuel Pressure Warning	10	1	24	—
Fuel Pressure Warning Lights ...	6	1	30	22
Fuel Pumps. Electrical	1		8	—
Fuel Pumps. Electrical	6	1	28	24
Fuel Pumps. Electrical	10	1	26	—
Fuel Pumps. Long Range Tanks	6	1	—	30
Fuel Pumps. Long Range Tanks	10	1	27	—
Fuel System	1		5–11	—
Fuel System	4	3	—	12
Fuel System	8		2–19	8
Fuel System Auxiliary	1		10	—
Fuel System Auxiliary	4	3	—	13
Fuel Tanks	5		—	35–36
Fuel Tanks	8		13	—
Fuel Tanks Access Doors	7	2	30	—
Fuel Tanks. Cleaning	4	3	32	—
Fuel Tank Compartments	7	2	29	—
Fuel Tanks. Draining	4	3	30	—
Fuel Tank Mountings	7	2	—	3–4
Fuel Tank No. 1	8		—	11
Fuel Tank Servicing Cocks ...	4	3	29	—
FUSELAGE	7	1	—	—
Fuselage Lubrication Diagram ...	4	3	—	6
Fuselage Sections	7	1	—	1–3
Fuzes and Circuit Breakers—Electrical	6	1	12	—
Fuzing and Crutching for Heavy Bombs	12	1	—	8
Fuzing and Release Bomb Supply	6	1	—	2, 29, 35

"G"	Sect.	Chap.	Para.	Illus.
Gantry. Engine—Changing ...	5		—	7
Gauges. Boost	8		19	—
Gauges. Fuel Contents	6	1	—	25
Gauges. Fuel Contents	10	1	28	—
Gauges. Fuel Contents (long range tanks)	6	1	—	30
Gauges. Fuel Contents (long range tanks)	10	1	29	—
Gauges. Oil Temperature ...	10	1	31	—
Gauges. Oil Temperature and Pressure...	1		14	—
Gauges. Radiator Temperature ...	10	1	30	—
Gearbox and Auxiliaries. Inboard	5		—	12–13
Gearbox Outboard Auxiliary ...	5		—	11
Gearbox Trimming Tab Control ...	7	4	7	9
General Lighting	6	1	47	34
GENERAL SERVICING	4	3	—	—
Generator Controls...	6	1	—	14
Generator Power Supply for Scanning Unit	6	1	—	44
Glider Tug and Resin Lamps ...	6	1	44	—
Gloves, Asbestos	2		26	—
G.P.I., A.M.U. and A.P.I.	6	1	—	40
G.P.I., A.M.U. and A.P.I.	10	1	53	—
GROUND HANDLING AND PREPARATION FOR FLIGHT ...	4	2	—	—

"H"

Hand De-icing Pump	4	3	100	—
Hand Fire Extinguishers	2		14	—
Hand Rails	3		8	—
Harness—Electrical	6	1	10	—
Head lamps and Navigation ...	6	1	43	23, 27
Heated Clothing	10	1	45	—
Heated Clothing Supply	6	1	51	32
Heated Pressure Head	6	1	49	29
Heated Pressure Head	10	1	43	—
Heated Scanner Units	10	1	46	—
Heating and Camera Supply ...	10	1	44	—
Heating and Ventilation	1		33	—
Heating Cabin System	11		9	4
Heating Cockpit	3		2	—
Heavy Bombs. Crutching and Fuzing	12	1	—	8
Hot and Cold Air Intake Control	6	1	—	20
Hot and Cold Air Intakes... ...	1		32	—
Hot and Cold Air Intakes... ...	8		35	—
Hot and Cold Air Intakes... ...	9		23	—
Hot and Cold Air Intakes... ...	10	1	20	—
H.T. and L.T. Supply—Electrical ...	6	1	—	43
H.T. and L.T. Supply—Electrical ...	10	1	48	—
H.T. and L.T. Supply—Radio ...	10	2	2	—
HYDRAULIC AND PNEUMATIC SYSTEMS	9		—	1–4
Hydraulic Jack—Flap	5		—	43
Hydraulic Jack Main Wheel Unit	4	3	81	—
Hydraulic System	1		15–20	—
Hydraulic System	4	3	47–64	—
Hydraulic System Bleeding ...	4	3	50	—
Hydraulic System Bleeding Main Wheel and Bomb Door Circuits	4	3	51	—
Hydraulic System Bomb Doors ...	4	3	56	20
Hydraulic System Bomb Doors Circuit	9		10	2
Hydraulic System Cleaning Fluid Filter	4	3	64	—
Hydraulic System Emergency Fuel Jettison	9		16	—

ALPHABETICAL INDEX — *(continued)*

"H" *(continued)*	Sect.	Chap.	Para.	Illus.
Hydraulic System Emergency Opening Bomb Doors	9		11	2
Hydraulic System Emergency System Flaps and Main Wheels	9		7	2
Hydraulic System Fault Rectification	4	3	62	31
Hydraulic System Feed and Undercarriage	4	3	—	18
Hydraulic System Filling	4	3	49	—
Hydraulic System Flaps	4	3	55	19
Hydraulic System Flaps Circuit	4	3	52	—
Hydraulic System Flaps Circuit	9		6	2
Hydraulic System Fuel Jettison	4	3	57	—
Hydraulic System Fuel Jettison	9		12	3
Hydraulic System Operational Tests	4	3	53	—
Hydraulic System Servicing Components	4	3	63	—
Hydraulic System Supply Circuit	9		2	—
Hydraulic System Main Wheels Circuit	9		5	2
Hydraulic System Main Wheels Units	4	3	54	—
"I"				
Identification Lamps	6	1	45	27
Ignition and Booster Coils	10	1	11	—
Ignition Booster and Engine Starter	6	1	—	15
Ignition Controls	6	1	20	—
Inboard Engine Controls Setting	4	3	—	16
Inboard Engine Sub-frame	5		—	18–19
Inboard Oil Tank	5		—	15
Indicator, Flap	6	1	33	29
Indicator, Flap	10	1	33	—
Indicator, Main Undercarriage	1		25	—
Indicator, Undercarriage	6	1	32	26
Indicator, Undercarriage	10	1	32	—
Indicators, Engine Speed	6	1	36	23
Indicators, Engine Speed	10	1	34	—
Indicators, Fuel Contents	6	1	37	25
Indicators, Fuel Flowmeter	6	1	—	19
Indicators, Oil Pressure	6	1	31	19
Indicators, Oil Pressure	10	1	23	—
Indicators, Oil Temperature	6	1	34	18
Indicators, Radiator Temperature	6	1	35	18
Induction Priming System	8		—	9
Inflating and Filling Shock-absorber Struts Main Wheel	4	3	77	24
Inflating and Filling Shock-absorber Strut Tail Wheel	4	3	92	26
Inflation Adaptor, Shock-absorber Struts	4	3	71	—
Inflation Main Wheel Tyre	4	3	—	25
Inflation Pressure Check. Shock-absorber Struts Main Wheel	4	3	74	24
Inflation Pressure Check. Shock-absorber Strut Tail Wheel	4	3	88	—
Inflation Tail Wheel Tyre	4	3	—	27
Inner and Outer Flaps	5		—	26
Inspection Panels and Former Positions	4	3	2	4–5
Instrument Panel. Flight-Engineer's	3		21	3
Instrument Panel. Navigators	3		28	2
Instrument and Engine Controls	1		—	1
Instruments and Flying Controls	1		—	2, 4
Inter-communication	1		46	—
Inter-communication	3		7	—
Inter-communication	10	2	5	3

"I" *(continued)*	Sect.	Chap.	Para.	Illus.
Interior Lamps	10	1	35	—
Intermediate and Outer Planes—Slinging	5		—	29
Intermediate and Outer Sections—Main Plane	7	2	—	2
Intermediate Centre Section	7	1	9	—
Intermediate Plane	7	2	26	—
Intermediate Plane Removal	5		—	31–33
Intermediate Plane Trailing Edge	5		—	27
"J"				
Jack. Hydraulic, Flap	5		43	—
Jack. Hydraulic Main Wheel	4	3	81	—
Jacking	4	3	3–9	1–3
Jacking and Slinging Sections of Aircraft	5		—	3
Jettison Bomb	2		8	—
Jettison Fuel	2		6	—
Jettison Fuel	4	3	57	—
Jettison Fuel Control Handle	1		20	—
Jettison Fuel Valve Resetting	4	3	61	—
Jettison Fuel System	9		12	3
Jettison Fuel System Emergency Operation	9		16	—
"K"				
Kit Stowage for Tropical	3		42	—
K Type Dinghy	2		22	—
"L"				
Lamps. Call	6	1	48	33
Lamps. Identification	6	1	45	27
Lamps. Landing	6	1	42	23
Lamps. Pilot's Panel	6	1	46	—
Lamps. Resin and Glider Tug	6	1	44	—
Landing Lamps	6	1	42	23
Landing Lamps Adjustment	4	3	98	—
Latches and Undercarriage Retracting Struts	7	5	6	—
Latches Undercarriage	4	3	80	28
Leading Edge—Intermediate Plane	7	2	31	—
Leakage of Fluid, Shock-absorber Strut Main Wheel	4	3	79	—
Leakage of Fluid, Shock-absorber Strut Tail Wheel	4	3	94	—
Lighting. Cockpit Emergency	1		24	—
Lighting. Equipment, Navigational and Signalling	1		—	3
Lighting. Fuel Pressure Warning	6	1	30	—
Lighting. General	6	1	47	34
LOADING AND C.G. DATA	4	1	—	—
Location Diagram—Bomb Fuzing and Release	6	1	—	2
Location Diagram Electrical	6	1	3	—
Location of Equipment	3		—	1
Location of Servicing Points	4	2	9	4
Locking Gear. Flying Controls	1		42	—
Locking Gear. Flying Controls	4	2	8	3
Locking Mechanism Retracting Struts Main Wheels	4	3	80	28
L.T. and H.T. Electrical Supply	6	1	—	43
L.T. and H.T. Electrical Supply	10	1	48	—
L.T. and H.T. Radio Supply	10	2	2	—
Lubrication	4	3	10	6–7

ALPHABETICAL INDEX — *(continued)*

"M"	Sect.	Chap.	Para.	Illus.
Main Fuel System	4	3	—	12
MAIN PLANE	7	2	—	—
Main Plane Centre Section Trailing Edge	7	2	—	5
Main Plane Intermediate and Outer Sections	7	2	—	2
Main Plane Lubrication	4	3	—	7
Main Plane Rigging	4	3	13	—
Maintenance Tools—Alighting Gear	4	3	—	32–42
Main Wheels and Bomb Door Hydraulic Circuit Bleeding	4	3	51	—
Main Wheels, Door and Valance Fairing, Removal	5		—	21
Main Wheels Emergency Circuit	9		7	—
Main Wheels Hydraulic Circuit	9		5	—
Main Wheels Hydraulic System	4	3	54	—
Main Wheels Inflation Adaptor	4	3	71	—
Main Wheels Jacking One	4	3	—	2
Main Wheels Shock-absorber Struts	4	3	70–79	29
Main Wheels Shock-absorber Struts Deflating	4	3	75	—
Main Wheels Shock-absorber Struts Dismantling	4	3	76	—
Main Wheels Shock-absorber Struts Filling and Inflating	4	3	77	—
Main Wheels Shock-absorber Struts Fluid Level Check	4	3	72	—
Main Wheels Shock-absorber Struts Inflation Pressure Check	4	3	74	24
Main Wheels Shock-absorber Struts Leakage of Fluid or Loss of Pressure	4	3	79	—
Main Wheels Shock-absorber Struts Testing	4	3	78	—
Main Wheels Shock-absorber Struts Topping Up With Fluid	4	3	73	—
Main Wheels Tyre Inflation Diagram	4	3	—	25
Main Wheels Unit	4	3	66–69	—
Main Wheels Unit	5		—	20
Main Wheels Unit	7	5	1–6	1
Main Wheels Unit. Adjustment of	4	3	80, 82	—
Main Wheels Unit Doors. Method of Setting	4	3	82	—
Mass Balancing of Flying Controls	4	3	23–27	—
Master Engine Cock	1		6	—
Method of Using Jacks	4	3	4	—
Mid-upper Turret	12	2	6–37	2–3
Mid-upper Turret	12	2	41	2–3
Mid-upper Turret Ammunition Boxes	12	2	30	—
Mid-upper Turret Type B.17	6	1	58	—
Mk. XIVA Bomb Sighting Head Supply	6	1	55	—
Mounting Fin to Tail Plane	7	3	—	3
Mounting No. 1 Fuel Tank	7	2	—	3
"N"				
Nacelle Trailing Edge Fairing	8		44	—
Navigational Equipment	1		—	3
Navigation and Head Lamps	6	1	43	27
Navigator's Instrument Panel	3		28	2
Navigator's Seat	7	1	23	—
Navigator's Station and Equipment	3		24	—
Navigator's Table	7	1	25	—
Nitrogen System	1		11	—
Nitrogen System	8		9	8
Nose Fairing	12	2	40	—
Nose Section	7	1	4	—
Nose Section Main Plane	7	2	11	—
Nose Turret	12	2	39	1
Nose Turret Ammunition Boxes	12	2	29	—
Nose Turret Boulton Paul Type F	12	2	2, 36	1

"O"	Sect.	Chap.	Para.	Illus.
Oil and Fuel	1		4	—
Oil Filter	8		26	—
Oil Filter Cleaning	4	3	35	—
Oil Fuel and Coolant System	4	3	29–38	—
Operational and Miscellaneous Controls and Instruments	1		—	4
Operational Tests, Hydraulic System	4	3	53	—
Oil Pressure Indicators	6	1	31	19
Oil System	1		12–14	—
Oil System	8		20–26	12
Oil Tanks	8		22	—
Oil Tanks Cleaning	4	3	34	—
Oil Tanks Draining	4	3	33	—
Oil Tanks Removal Outboard	5		—	16
Oil Temperature and Pressure Gauges	1		14	—
Oil Temperature Gauges	10	1	31	—
Oil Temperature Indicators	6	1	34	—
Oil Temperature Thermometers	6	1	—	18
Opening of Bomb Doors—Emergency	9		11	—
Outboard Auxiliaries—Gearbox	5		—	11
Outboard Engine Sub-frame	5		—	17
Outboard Oil Tank Removal	5		—	16
Outer and Inner Flaps	5		—	26
Outer and Intermediate Planes	5		—	30
Outer and Intermediate Planes Slinging	5		—	29
Outer Plane	7	2	32	2
Outer Plane to Intermediate Plane —Front and Rear Spar Joints	5		—	33
Oxygen	1		34	—
Oxygen Equipment	3		6	—
Oxygen Supply System	11		16	5
"P"				
Packing and Stowing Q Type Dinghy	2		—	4
Parachute Exits and Parachutes	2		16	1
Pedals. Rudder	7	4	3	5
Photographic Equipment	11		19	6
Picketing and Arrangement of Covers	4	2	—	2
PILOT'S CONTROLS AND EQUIPMENT	1		—	—
Pilot's Panel, Emergency Controls	2		2	—
Pilot's Panel Lamps	6	1	46	—
Pilot's Seat	1		48	—
Pilot's Seat	7	1	20	—
Pilot's Seat, Second	1		49	—
Pilot's Seat, Second	7	1	21	—
Pipe System. Fuel	8		5	—
Pistol. Signal	2		28	—
Plugs and Sockets. Electrical	6	1	61	—
PNEUMATIC AND HYDRAULIC SYSTEMS	9		—	—
Pneumatic System	1		21	—
Pneumatic System	4	3	—	22–23
Pneumatic System	9		17–25	4
Pneumatic System Air Cleaner	9		24	—
Pneumatic System Air Charging	9		25	—
Pneumatic System Brakes	9		19	—
Pneumatic System Hot and Cold Air Intakes	9		23	—
Pneumatic System Radiator Flap	9		20	—
Pneumatic System Slow-running cut-out Control	9		22	—
Pneumatic System Supercharger Two-speed Control	9		21	—
Pneumatic System Supply Circuit	9		18	—

ALPHABETICAL INDEX — *(continued)*

"P" *(continued)*	Sect.	Chap.	Para.	Illus.
Pop-riveted Panels	5		8	4
Portable Oxygen Bottles	2		23	—
Position Indicator. Flaps	1		19	—
Position Indicator. Flaps	6	1	33	—
Position Indicator. Undercarriage	6	1	32	—
Position of F.24 Camera	11		22	—
Position of Formers and Ribs	4	3	—	5
Power Plant	5		—	10
Power Plant Slinging	5		—	8
Power Supply (D.C.) and Distribution	10	1	3	—
Power Supply Electrical	6	1	14	—
Power Supply Radio	10	2	1	—
Pressure and Oil Temperature Gauges	1		14	—
Pressure Fuel Warning	10	1	24	—
Pressure Head. Heated	6	1	49	29
Pressure Head. Heated	10	1	43	—
Pressure Indicators. Oil	6	1	31	19
Pressure Indicators. Oil	10	1	23	—
Pressure Inflation Check, Shock-absorber Struts	4	3	74, 88	—
Pressure Loss of—Shock-absorber Struts	4	3	79, 94	—
Pressure Tests. Fuel Control Cocks	4	3	42	—
Pressure Warning Lights. Fuel	6	1	30	22
Priming Engine	6	1	27	28
Priming Engine	10	1	21	—
Priming Induction System	8		—	9
Priming System. Electric	4	2	11	—
Priming System. Fuel	8		11	—
Propeller and Throttle Controls	4	3	44	—
Propeller Feathering	6	1	19	16
Propeller Feathering	10	1	12	—
Propeller Feathering Tests	4	3	95	—
Pulsometer Pumps	8		18	—
Pulsometer Pumps and Fuel Distributor Tank	5		—	14
Pump. Hand De-icing	4	3	100	—
Pumps, Electric Fuel	1		8	—
Pumps, Fuel	10	1	26	—
Pumps, Fuel Long Range Tanks	6	1	—	30
Pumps, Fuel Long Range Tanks	10	1	27	—
Pumps Pulsometer	8		18	—
Pumps Pulsometer and Fuel Distributor Tank	5		—	14
Pumps Pulsometer	6	1	28	24
"Q"				
Q Type Dinghy—Air/Sea Rescue Equipment	2		19	3–7
Q Type Dinghy Emergency Equipment Container	2		—	7
Q Type Dinghy Folding	2		—	5
Q Type Dinghy Release	10	1	47	—
Q Type Dinghy Stowing and Packing	2		—	4
Q Type Dinghy Stowing Instructions	2		—	6
"R"				
Radar and Radio Equipment	10	2	—	1
Radiator and Engine Cowlings	5		—	6
Radiator Flap Controls	6	1	25	21
Radiator Flaps	10	1	16	—
Radiator Flaps System	9		20	—
Radiator Shutters	8		36	—
Radiator Shutters Operation	2		10	—
Radiator Temperature Gauges	10	1	30	—
Radiator Temperature Indicators	6	1	35	18

"R" *(continued)*	Sect.	Chap.	Para.	Illus.
Radial Feeder Distribution	6	1	17	31
Radio	1		43	—
Radio Aerial System	10	2	8	—
Radio and Radar Equipment	10	2	—	1
Radio Demolition Switches	2		15	—
Radio Equipment	3		27	—
RADIO INSTALLATION	10	2	—	—
Radio Intercommunication	10	2	5	3
Radio Power Supply	10	2	1	—
Radio Supplies and Demolition	10	1	49	—
Radio T1154–R1155	10	2	4	—
Radio TR.5043	10	2	6	—
Radio TR.1196	10	2	7	—
Radio Wiring Diagram T.1154, R.1155, TR.1196, A.1134A Amplifier and TR.5043	10	2	—	2
Rear Centre Section	7	1	12	—
Rear Centre Section Equipment	3		35–39	—
Rear End. Jacking	4	3	8	—
Rear Section	7	1	16	—
Rear Section Equipment	3		40–43	—
Rear Turret	12	2	17, 38, 44	4
Rear Turret Ammunition Boxes	12	2	31	—
Rear Turret Supply and Internal Distribution	6	1	—	42
Re-assembling Tail Wheel Strut	4	3	91	—
Recognition, Navigation and Identification Lamps	6	1	—	27
Rectifying Defects in Trim	4	3	21	—
Refitting and Removal Turrets	12	2	39–44	—
Regulators, Voltage Electrical	6	1	15	—
Release and Bomb Fuzing	10	1	58	—
Release and Bomb Fuzing Supply	6	1	—	29, 35
Release Bomb Equipment	12	1	19	—
Release Emergency Mechanical	12	1	20	—
Release Unit Type F (with Attachment G)	12	1	—	9
Removal and Installation Mk. XIVA Bomb Sight and Computor	12	1	21	4
Removal and Refitting Turrets	12	2	39–44	—
REMOVAL, ASSEMBLY AND DISMANTLING OPERATIONS	5		—	—
Removal Notes	5		8–9	—
Removal of Main Wheel	4	3	68	—
Removing and Refitting Main Wheel Tyre	4	3	69	—
Removing and Refitting Tail Wheel Tyre	4	3	85	—
Removing Tail Wheel	4	3	84	—
Rescue Equipment, Air/Sea	2		19	—
Resetting Fuel Jettison Valve	4	3	61	—
Resin and Glider Tug Lamps	6	1	44	—
Retracting Struts and Latches	7	5	6	—
Retracting Struts Locking Mechanism	4	3	—	28
Rib and Former Positions	4	3	—	5
Rib Numbering—Main Plane	7	2	10	—
Rigging	4	3	11–27	—
Rigging Control Surfaces	4	3	—	10
Rigging Instructions	4	3	—	8–9
Routing Charts—Electrical	6	1	5	14–44
Rudder Controls	1		36	—
Rudder Controls	7	4	6	3
Rudder Pedals	7	4	3	5
Rudder Trimming Tab Controls	7	4	10	8
Rudders	5		—	37
Rudders	7	3	8	—
Rudders and Elevators	4	3	19	—
Rudders and Fins	7	3	—	2
Rudders and Fins Rigging	4	3	15	—
Rudders Mass Balancing	4	3	27	—

ALPHABETICAL INDEX — *(continued)*

"S"	Sect.	Chap.	Para.	Illus.
Sanitary Closet	4	3	103	—
Scanner Unit Heaters	6	1	—	32
Scanner Unit Heaters	10	1	46	—
Screening and Bonding. Electrical	6	1	62	—
Seat Air Bomber's	7	1	22	—
Seat First Pilot's	7	1	20	10
Seat Pilot's	1		48	—
Seat Navigator's	7	1	23	—
Seat Second Pilot's	1		49	—
Seat Second Pilot's	7	1	21	—
Seat Wireless Operator's	7	1	24	—
Seats, Door and Windows	1		48, 51	—
Secondary and Engine Controls—Fuselage	8		—	1
Secondary and Engine Controls—Main Plane	8		—	7
Sections of Aircraft	5		—	1
Servicing Cocks. Fuel Tank	4	3	29	—
SERVICING—ELECTRICAL	6	1	—	—
SERVICING—GENERAL	4	3	—	—
Servicing of Hydraulic Components	4	3	63	—
Servicing Points	4	2	9	4
Servicing Turrets	12	2	25–38	—
Setting Engine Controls	4	3	—	16, 17
Setting of Automatic Controls	4	3	22	11
Setting of Flying Controls	4	3	16–22	—
Setting of Fuel Cock Controls	4	3	—	15
Setting of Fuselage Push-pull Controls	4	3	19	—
Shimmy Eliminator. Tail Wheel	7	5	—	2
Shock-absorber Struts—Main Wheel	4	3	70–79	29
Shock-absorber Struts—Main Wheel	7	5	4	—
Shock-absorber Struts—Tail Wheel	4	3	86–94	30
Shock-absorber Struts—Tail Wheel	7	5	11	—
Sight and Computor, Mk. XIVA Bomb	12	1	21	4
Sight Equipment. Bomb	12	1	17	—
Sighting Head Supply Mk. XIVA Bomb	6	1	55	43
Sights and D.R. Compass. Bomb	10	1	50	—
Sights, Bomb	12	1	5	—
Signalling, Navigational and Lighting Equipment	1		—	3
Signal Pistol	2		28	—
Slinging and Jacking Sections of Aircraft	5		—	3
Slinging Intermediate and Outer Planes	5		—	29
Slinging Power Plant	5		—	8
Slip Heater Supply. Bomb	6	1	50	—
Slow-running Cut-off	6	1	22	20
Slow-running Cut-off	10	1	17	—
Slow-running Cut-out	1		30	—
Slow-running Cut-out	8		33	—
Slow-running Cut-out Control	9		22	—
Sockets and Plugs. Electrical	6	1	61	—
Spar Cover. Front	5		—	34
Spar Joints. Main Plane	7	2	9	—
Speed Indicators. Engine	6	1	36	23
Speed Indicator. Engine	10	1	34	—
Standard Bomb Gear Housing	12	1	22	—
Starters. Engine	6	1	18	15
Starting. Engine	10	1	10	—
Static Line, Stowage	2		18	—
Stowage. Cartridge	2		29	—
Stowage. Flare	3		39	—
Stowage. Tropical Kit	3		42	—
Stowing and Packing Q Type Dinghy	2		—	4–6
Supercharger Controls	1		29	—
Supercharger Controls	6	1	26	21
Supercharger Controls	8		32	—
Supercharger Controls	10	1	22	—
Supercharger Two-speed Control	9		21	—
Supply and Distribution. Electrical	6	1	16	—
Swinging D.R. Compass	4	3	102	—
System Details. Electrical	6	1	7–15	—

"T"				
Tabs	1		40–41	—
Tail Plane	7	3	3	1
Tail Plane and Fin Mounting	7	3	—	3
Tail Plane Rigging	4	3	14	—
Tail Unit	5		—	40
TAIL UNIT	7	3	—	—
Tail Unit Lubrication Diagram	4	3	—	6
Tail Wheel Jacking for Removal of	4	3	—	3
Tail Wheel Mounting in Fuselage	7	1	—	9
Tail Wheel Removing	4	3	84	—
Tail Wheel Shimmy Eliminator	7	5	—	2
Tail Wheel Shock-absorber Strut	4	3	—	30
Tail Wheel Shock-absorber Strut	4	3	86–94	—
Tail Wheel Shock-absorber Strut	5		—	41
Tail Wheel Shock-absorber Strut	7	5	11	—
Tail Wheel Tyre Removing	4	3	85	—
Tail Wheel Unit	4	3	83–94	—
Tail Wheel Unit	7	5	10–11	2
Tanks. Fuel	5		—	35–36
Tanks. Fuel	8		13	11
Tanks. Fuel Access Doors	7	2	30	—
Tanks. Fuel Cleaning	4	3	32	—
Tanks. Fuel Compartments	7	2	29	—
Tanks. Fuel Distributor	8		—	10
Tanks. Fuel Distributor and Pulsometer Pumps	5		—	14
Tanks. Fuel Draining	4	3	30	—
Tanks. Fuel Draining Distributor	4	3	31	—
Tanks. Fuel Long Range, Contents Gauges	6	1	—	30
Tanks. Fuel Long Range, Fuel Pumps	6	1	—	30
Tanks. Fuel Nos. 2 and 3 Compartments	7	2	—	4
Tanks. Fuel No. 1 Mounting	7	2	—	3
Tanks. Fuel Servicing Cocks	4	3	29	—
Tanks. Oil	8		22	—
Tanks. Oil Cleaning	4	3	34	—
Tanks. Fuel Draining	4	3	33	—
Tanks, Oil, Inboard	5		—	15
Tanks, Oil, Outboard	5		—	16
Temperature and Pressure Gauges, Oil	1		14	—
Temperature Gauges. Oil	10	1	31	—
Temperature Gauges. Radiator	10	1	30	—
Temperature Indicators. Oil	6	1	34	18
Temperature Indicators. Radiator	6	1	35	18
Terminal Blocks. Electrical	6	1	11	—
Test Cock. Vacuum System	4	3	96	—
Testing Shock-absorber Strut. Main Wheel	4	3	78	—
Testing Shock-absorber Strut. Tail Wheel	4	3	93	—
Tests. Propeller Feathering	4	3	95	—
Theoretical Diagrams. Electrical	6	1	4	3–13
Throttle and Propeller Controls	4	3	44	—
Tools. Alighting Gear Maintenance	4	3	—	32–42
Topping up Cooling System	4	2	13	—

ALPHABETICAL INDEX — *(continued)*

"T" *(continued)*	Sect.	Chap.	Para.	Illus.
Towing	4	2	2	1
Towing Backward	4	2	4	—
Towing Forward	4	2	3	—
Trailing Edge—Centre Plane	5		—	28
Trailing Edge—Intermediate Plane	5		—	27
Trailing Portion Main Plane	7	2	19	5
Transport Sections	5		—	2
Trimming Controls	1		39	—
Trimming Tab Cables	5		9	—
Trimming Tabs	4	3	20	—
Trimming Tabs Aileron	7	2	34	—
Trimming Tabs Aileron	7	4	11	6
Trimming Tabs Control Gearbox	7	4	7	9
Trimming Tabs Elevator	7	3	5	—
Trimming Tabs Elevator	7	4	8	7
Trimming Tabs Rudder	7	3	9	—
Trimming Tabs Rudder	7	4	10	8
Tropical Kit Stowage	3		42	—
TR.5043	10	2	6	2
TR.1196	10	2	7	2
T.1154—R.1155	10	2	4	2
TURRET	12	2	—	—
Turret, Front, B.P. Type F	6	1	57	—
Turret, Mid-upper	12	2	6, 37	2–3
Turret, Mid-upper Ammunition Boxes	12	2	30	—
Turret, Mid-upper Removal	12	2	41	—
Turret, Mid-upper Type B.17	6	1	58	—
Turret, Nose	12	2	2, 36	1
Turret, Nose Ammunition Boxes	12	2	29	—
Turret, Nose Removal	12	2	39	—
Turret, Rear, B.P. Type D	6	1	59	—
Turret, Rear, B.P. Type D and Internal Distribution	6	1	—	42
Turret, Removing and Refitting	12	2	39–44	—
Turret, Servicing	12	2	25–38	—
Turret, Supplies	10	1	54	—
Turret, Supplies and Internal Distribution. Electrical	6	1	—	37
Turret, Tail	12	2	17–38	4
Turret, Tail Ammunition Boxes	12	2	31	—
Turret, Tail Removal	12	2	44	—
Turret, Type D, Ammunition Ducts and Boxes	12	2	—	6
Type K Dinghy	2		22	—
Type Q Dinghy	2		19	3–7
Type Q Dinghy Emergency Equipment Container	2		—	7
Type Q Dinghy Folding	2		—	5
Type Q Dinghy Installation	2		—	3
Type Q Dinghy Stowing and Packing	2		—	4
Type Q Dinghy Stowing Instructions	2		—	6
Typical Fuel Cock Details	4	3	—	14
Tyre Inflation—Main Wheel	4	3	—	25
Tyre Inflation—Tail Wheel	4	3	—	27
Tyre Removing and Refitting, Main Wheel	4	3	69	—
Tyre Removing and Refitting, Tail Wheel	4	3	85	—

"U"

Undercarriage	4	3	65–69	—
UNDERCARRIAGE	7	5	—	1
Undercarriage Adjustments	4	3	80–82	—
Undercarriage and Bomb Door Hydraulic Bleeding	4	3	51	—
Undercarriage and Flaps Operation	2		3	—
Undercarriage Beams	5		—	22, 23

"U" *(continued)*	Sect.	Chap.	Para.	Illus.
Undercarriage Circuit, Hydraulic	9		5	2
Undercarriage Control Lever	1		16	—
Undercarriage Doors and Valance Fairing Removal	5		—	21
Undercarriage Doors and Valances	8		43	—
Undercarriage Doors—Method of Setting	4	3	82	—
Undercarriage Emergency System	9		7	—
Undercarriage Indicator	1		25	—
Undercarriage Indicator	10	1	32	—
Undercarriage Indicator and Buzzers	6	1	32	26
Undercarriage Locking Mechanism	4	3	—	28
Undercarriage Maintenance Tools	4	3	—	32–42
Undercarriage Retracting Struts and Latches	7	5	6	—
Undercarriage Shock-absorber Struts	4	3	70–79	29
Undercarriage Shock-absorber Struts	7	5	4	—
Undercarriage Shock-absorber Strut Inflation Diagram	4	3	—	24
Undercarriage Support Beams	8		45	—
Undercarriage Tyre Inflation Diagram	4	3	—	25
Undercarriage Tyre Removal and Refitting	4	3	69	—
Undercarriage Unit—Hydraulic System	4	3	54	18
Undercarriage Unit Removal	5		—	20
Undercarriage Wheel Removal	4	3	68	—

"V"

Vacuum System	11		5	2
Vacuum System Test Cock	4	3	96	—

"W"

Warning Lights, Fuel Pressure	6	1	30	22
Warning Lights, Fuel Pressure	10	1	24	—
Weatherproofing	5		10	5
Wheel. Jacking for One Main	4	3	7	2
Wheel. Jacking for Tail	4	3	8	3
Wheel Mounting in Fuselage, Tail	7	1	—	9
Wheel Removal, Main	4	3	68	—
Wheel Removal, Tail	4	3	84	—
Wheel Tyre Inflation, Main	4	3	—	25
Wheel Tyre Inflation, Tail	4	3	—	27
Wheel Unit. Removal, Main	5		—	20
Wheels. Emergency Operation	9		7	—
WHEELS. MAIN	7	5	—	—
Window. De-icing for Air Bomber's	3		18	—
Windows. Direct Vision	1		50	—
Windows. Doors and Seats	1		48–51	—
WIRELESS INSTALLATION	10	2	—	—
Wireless Operator's Seat	7	1	24	—
Wireless Operator's Station and Equipment	3		29	—