CHAPTER I

GENERAL INFORMATION

CHAPTER 1.

GENERAL INFORMATION.

CONTENTS.

1. INTRODUCTION.
1.1. DESIGN AND MANUFACTURE.
1.2. VARIANTS.
1.3. PERFORMANCE.
1.4. ADVANCED TRAINING.
1.5. S.T.O.L.
1.6. ARMAMENT CAPABILITY.
1.7. CLOSE SUPPORT.
1.8. NAVAL APPLICATION.
1.9. PILOTS SAFETY.
1.10. MAINTAINABILITY.

2. AIRCRAFT DATA LIST.
2.1. AIRCRAFT LEADING PARTICULARS.
2.2. LANDING GEAR.
2.3. FLYING CONTROLS.
2.4. AIRCRAFT SYSTEMS.
2.5. PROPULSION.
2.6. ELECTRICAL SYSTEM.
2.7. ARMAMENT EQUIPMENT.
2.8. AVIONIC EQUIPMENT.

3. SAFETY PRECAUTIONS.
3.1. ESCAPE SYSTEM.
3.2. GENERAL FIRE PRECAUTIONS.
3.3. SAFETY DEVICES.
3.4. AIRCRAFT TOWING.
3.5. ENGINE RUNNING.
3.6. ELECTRICAL.
3.7. AIRCRAFT REPLENISHING.
3.8. ARMAMENT AND EXTERNAL STORES.

CHAPTER 1.

ILLUSTRATIONS.

FIG.1.	AIRCRAFT G.A.
FIG.2.	CARRIAGE OF EXTERNAL STORES.
FIG.3.	EJECTION SEAT SATFETY PINS.
FIG.4.	SAFETY DEVICES.
FIG.5.	COCKPIT SAFETY CHORD.
FIG.6.	ARRESTOR HOOK AND UNDERCARRIAGE DOOR.
FIG.7.	TOWING.
FIG.8.	ENGINE RUNNING DANGER ZONES.
FIG.9.	NOISE INTENSITY ZONES.
FIG.10.	PYLON AND ADAPTOR SAFETY PINS.

CHAPTER 1.

GENERAL INFORMATION

1. INTRODUCTION.

1.1. Design and Manufacture.

The Jaguar (Fig 1) programme is managed by a joint company set-up by the British Aircraft Corporation and Dassault Breguet-Aviation called SEPECAT (Societe Europeene de Production de L'Avion d' Ecole de Combat d' Appui Tachque).

The whole of the work on the Jaguar is divided, half to each company. Nose, cockpit and forward fuselage are being made by Breguet and the rear fuselage and wings by British Aircraft Corporation.

1.2. Variants

To meet the diverse requirements of present and future users Jaguar is being made in a number of variants. The tactical support aircraft are single seat, the advanced trainers are two seat.

1.3. Performance

Maximum speed at low-level is Mach.1.1. and Mach 1.7. at high altitude. Flying in the tactical support role with internal fuel, while carrying a combat load of 10,000 lbs. the range varies from 320 nautical miles on a Lo-lo-lo mission to 675 nautical miles on a Hi-lo-hi mission. The excellent ferry performance obtained with internal fuel may be increased by fitting external drop tanks and a total range of greater than 2,430 nautical miles will be available.

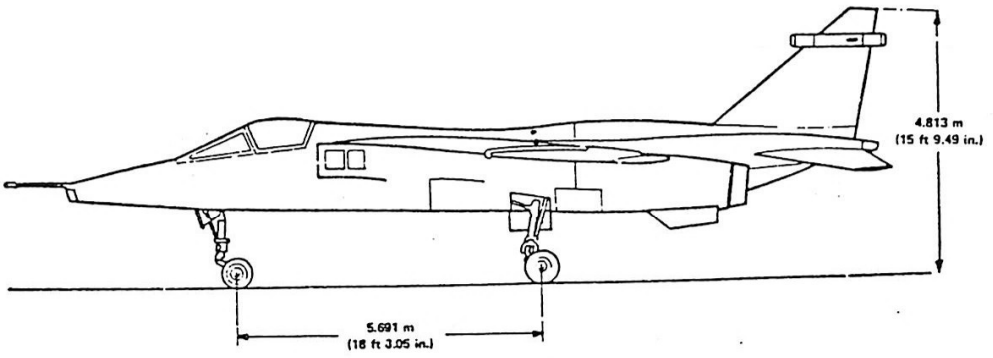

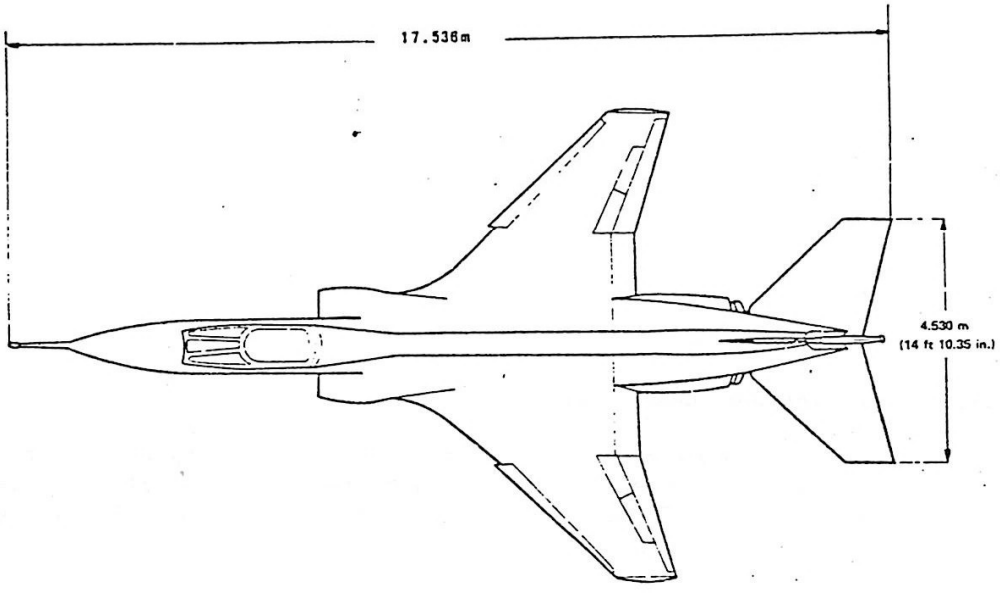

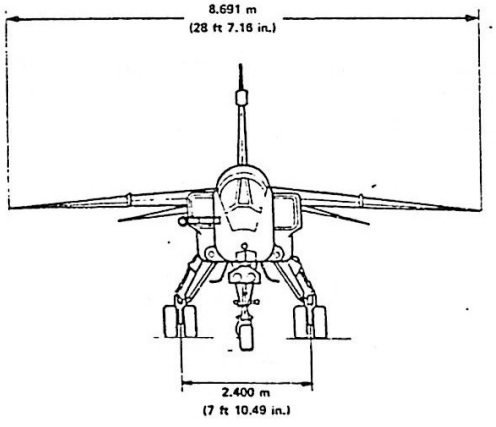

FIG. I AIRCRAFT GENERAL ASSEMBLY

1.4. Advanced Training

Jaguar is the advanced trainer for the 1970's. It has supersonic performance and can bridge the gap between the basic pilot trainer and front line strike aircraft and Mach 2 fighters.

Particular attention has been paid to the design of the Jaguar cockpit, so that the best possible field of view is provided for the rear pilot. This is so good that the performance of the pupil may be monitored throughout training missions. The instructors can immediately detect any errors made during take-off, weapon delivery or landing. Weapon training is normally an important part of the advanced training syllabus in this respect because of their inability to carry representative weapon loads and systems equipment.

The Jaguar trainer retains the weapons carrying capability of its tactical support counterpart.

1.5. S.T.O.L.

The high thrust of the Jaguars twin turbo fan engines is matched with high-lift devices to give S.T.O.L. type take-off and landing performances.

To take-off carrying a typical weapons load and clear an obstacle fifty feet high requires 2,400 feet.

For training operations the field length need not be more than 6,560 feet. If an engine fails during take-off, this distance will permit the aircraft to be stopped or continue the run and take-off on one engine.

Landings can require a ground roll of only 1,550 feet.

1.6. Armament Capability. (Fig.2.)

The Jaguar weapons are carried externally on five pylons, two attached underneath each mainplane, and one under the fuselage along the centre-line. These pylons are non jettisonable but they contain the necessary components and release units for carriage, release, or jettison of all equipment or weapons attached to the pylons.

The capacity of the inner wing pylons can be increased by the use of tandem bomb carriers, and all four wing pylons can carry two rocket launchers fitted on twin adaptors.

Two Aden 30 mm guns are installed in gun bays in the lower centre fuselage with ammunition boxes located in compartments above the gun bays, each box holding 150 rounds per gun. During gun firing the empty cartridge cases are ejected overboard while the belt links are collected in a compartment between the gun bays. Provision is also made for the installation of Guided Missiles.

The Jaguar T.Mk.2. has a similar weapons system to the Mk.1. aircraft. It can carry the same external stores on the same pylons but has only one 30 mm Aden Gun installed in the port gun bay.

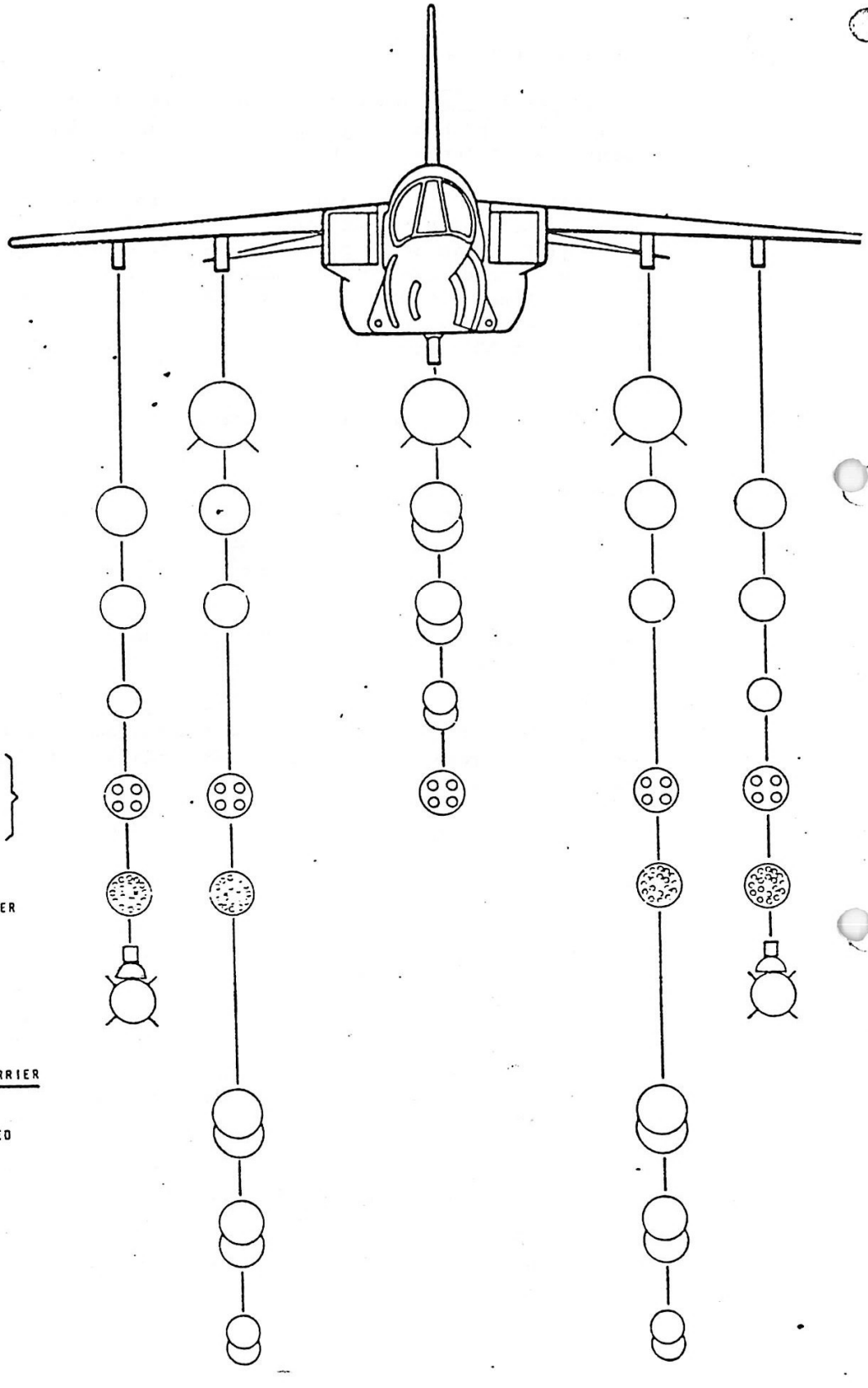

FIG. 2 CARRIAGE OF EXTERNAL STORES

1.7. Close Support.

Jaguar embodies all the characteristics needed for effective battle field support:-

Two engined safety.

Forward airfield operation.

Large weapon load.

Large radius of action.

Simplicity, accessibility and ease of maintenance.

Long fatigue life.

Docile handling characteristics.

High 'g' manoeuvre ability.

1.8. Naval Application (French).

The Jaguar requirements call for the development of a naval variant for use from aircraft carriers. This aircraft will have an undercarriage designed to cater for the increased vertical velocities encountered on carrier operation and a strengthened structure equipped with arrester and catapult hooks.

1.9. Pilot's Safety.

Safety and maintenance have received considerable attention. The Jaguar is equipped with a zero altitude and zero speed ejection seat. ~~The tactical variant employs extensive armour plating to protect the cockpit and whole underside. Self-sealing fuel tanks are standard and fuel lines are armoured.~~

1.10. Maintainability.

The Jaguars have been designed for easy maintainability under field conditions. Where possible, plug-in modules have been provided for the electronic equipment, and various servicing points are accessible without the use of ladders or scaffolding. The goal was a turn-round time - including rearming - of fifteen minutes under rough field conditions. A complete engine change can be accomplished in about three hours.

2. AIRCRAFT DATA LIST.

2.1. Aircraft Leading Particulars.

2.1.1. Overall Dimensions.

Length, 'B' Version: 17.536m

2.1.1. (contd).

Length, 'S' Version. 16.830m

Span. 8.692m

2.1.2. Weight

'S' Version, basic weight .. .. 7151 Kg. (15732 lb). with Pilot.

'S' Version, equipped for ... ... 12720 kg. (27983 lb). Close Support Basic Mission (1 x 1200 litre drop tank, full internals, 2 x 1000 lb retard bombs, 150 rounds per gun).

'S' Version, equipped for ... ... 13838 kg. (30443 lb). Tactical Strike Basic Mission (2 x 1200 litre drop tanks, full internals, 2 x 1000 lb retard bombs, 150 rounds per gun).

'B' Version, basic weight with ... 7292 kg. (16042 lb) two Pilots..

2.2. Landing Gear.

2.2.1. General.

Layout.	... ...	Tricycle.
Track.	... ...	2.4 m. (7ft 10in).
Wheel Base.	... ...	5.691 m. (18 ft 7 in).

2.2.2. Main Undercarriage.

Type.	... ...	Messier Cantilever Suspension, retracting forward into fuselage.
Shock Absorber.	... ...	Two stage oleo pneumatic with 300 mm (11.7 in) stroke at the wheel axis.
Nitrogen pressures.	... ...	H.P. chamber 87 bars (1280 lbf/in^2).
Leg Extended.	... ...	L.P. chamber 11.2 bars (165 lbf/in^2).
Fluid.	... ...	OM 15.

2.2.2. (contd)

Wheels.	... ...	Twin Dunlop Wheels in 'Diablo' formation.
Tyres.	... ...	615 mm x 225 mm - 254 mm (24 in x 8.8 in - 10 in).
Tyre Pressure 'B' version.	... ...	6.9 bars (100lbf/in^2).
Tyre Pressure 'S' version. (Basic Mission)	... ...	6.9 bars (100lbf/in^2).

2.2.3. Nose Undercarriage.

Type	... ...	Messier Cantilever Suspension, retracting aft into fuselage.
Shock Absorber.	... ...	Single-stage oleo-pneumatic with 330 mm (12.9in) Stroke at wheel axis.
Nitrogen pressure (Leg extended)	... ...	20.4 bars (300 lbf/in^2).
Fluid.	... ...	OM 15.
Wheel.	... ...	Single.
Tyre.	... ...	550 mm x 250 mm - 152 mm (22 in x 10 in - 5 in).
Tyre Pressure.	... ...	3.4 bars (50 lbf/in^2).

2.3. Flying Controls.

Tailplane.	... ...	Hydraulic power operated servo-control.
Rudder.	... ...	Hydraulic power operated servo-control.
Spoilers.	... ...	Hydraulic power operated servo-control.
Flaps.	... ...	Screw jack operation via hydraulic motor and torque shafts.
Slats.	... ...	Screw jack operation via hydraulic motor and torque shafts.
Air Brakes.	... ...	Hydraulic Jack operation.

2.4. Aircraft Systems.

2.4.1. Hydraulic System.

Type.	Two independent systems.
No.1. Circuit supplies.	One side of PFCU's and Flap and Slat control Units. Undercarriage raising and lowering (Normal). Braking (Normal & emergency) In Flight Refuelling Probe extension and retraction. (Normal) (S' Version only).
No.2.Circuit supplies...	One side of PFCU's and Flap and Slat Control Units. Airbrakes. Nosewheel steering Undercarriage Emergency lowering. Braking (Emergency & Parking). In Flight Refuelling Probe extension (Emergency) ('S' Version only).
Fluid.	OM 15.
Operating.	206 bars (3000 lbf/in^2).
Pressure Pumps.	Vickers Sperry Rand, maximum output 55 litres (12.1 gallons) per minute.
Main accumulator pressure	100 bars (1500 lbf/in^2).
Braking accumulator pressure.	100 bars (1500 lbf/in^2).
Nose wheel steering accumulator.	16 bars (235 lbf/in^2).

2.4.2. Air Conditioning System.

Type.	Turbo Compressor Cold Air Unit (Normalair).
Cabin Differential Pressure.	300 mb. (4.3 lbf/in^2) maximum.
Equipment Cooling.	Air Conditioning Cold Air.

2.4.3. Fuel System

Type.	... ...	Electrical Pump and Pressurised.
Fuel.	... ...	AVTUR/50, AVTAG, AVCAT.
Internal Tanks.	... ...	1 Integral in each wing. 4 Integral in Fuselage. 2 Flexible Collector Tanks, total internal capacity, 4200 litres.
Drop Tanks.	... ...	Provision for fitting up to 3 drop tanks, each of 1200 litres capacity.

2.4.4. Oxygen System.

Type.	... ...	LOX System, man-mounted demand regulator with 100% and Airmix facilities.
Capacity.	... ...	10 litre British Oxygen Converter.
Emergency.	... ...	Gaseous system, 70 litre capacity at NTP.

2.5. Propulsion.

2.5.1. Engines.

Number.	... ...	Two.
Type.	... ...	Rolls Royce/Turbomeca Adour Turbofan with full variable re-heat
Location.	... ...	Side-by-side in lower rear fuselage.
Sea Level Static thrust. (dry).	... ...	5.370 kg.
Sea Level Static thrust. (Reheat)	... ...	8.000 kg.
Weights.	... ...	Engine, 570 kg. Jet Pipe and Re-heat 139 kg. Complete Propulsion Unit 709 kg.

2.5.1. (contd).

Lengths.	... ...	Engine 1.73 m. Jet Pipe 1.14 m. Complete Propulsion Unit. 2.87 m.
Maximum diameter.	... ...	Bypass duct 0.81 m.
Fuel System	... ...	Lucas main system,Dowty reheat system.
Starter.	... ...	L.P. Air Turbine supplied by a Microturbo Gas generator.

2.5.2. Engine Oil System.

Oil.	... ...	NATO code 0.156 -OX.27
System Capacity.	... ...	11.9 litres.
Tank Capacity	... ...	6.53 litres.
Useable Contents.	... ...	4.55 litres.
Maximum Consumption .	...	0.57 litres.

2.6. Electrical System.

A.C. Supply.	... ...	Two independent systems, 200 Volts, 400 Hz,3-phase 12 KVA.
D.C. Supply	... ...	Ferranti Type 152 Transformer Rectifiers. 2 x 28 volts, 150 amps.
Emergency Supply.	... ...	DC. One SAFT alkaline battery, 24 volts, 40 ampere hour.
		AC. Ferranti Static Inverter 115 volts, 400 Hz. single phase 150 VA.

2.7. Armament.

Guns.	... ...	'B' Version, 1 Aden 30 mm. 'S' Version, 2 Aden 30 mm.
Stores Carriage Positions	... ...	1 Fuselage Pylon. 2 Inner Wing Pylons. 2 Outer Wing Pylons.
Maximum load of stores.	... ...	About 8000 lb.

2.7. (contd).

Ejection Seats. ... ... Martin Baker Type 9B.Mk.2 Rocket Assisted Seat.

2.8. Avionic Equipment.

2.8.1. Communication System.

Communication Control System.	ARI 23228
Main V/UHF	ARI 18220/3
Standby UHF	ARI 23159
HF(SSB)	ARI 23181/5
Voice Recorder.	ARI 23208

2.8.2. Radio Navigational Aids.

Tacan	ARI 23205/4
ILS	ARI 18227/1
Radar Altimeter	ARI 23232

2.8.3. Electronic Counter Measures.

Passive Warning Radar	ARI 18223/1

2.8.4. Search and Identification.

IFF	ARI 23134/3

2.8.5. Navigation - Attack System.

Navigation Weapon Aiming Attack System.
Head-Up Display.
Air Data Computer.
Incidence Probe.
Gyro Magnetic Compass (C2J).
Weapon Control System.
Radio Interface Unit.

3. SAFETY PRECAUTIONS.

3.1. Escape System.

3.1.1. Lethal Warning.

The Ejection seat and its associated cartridge fired escape systems are a potential source of death or injury to personnel and damage to the aircraft if inadvertently operated.

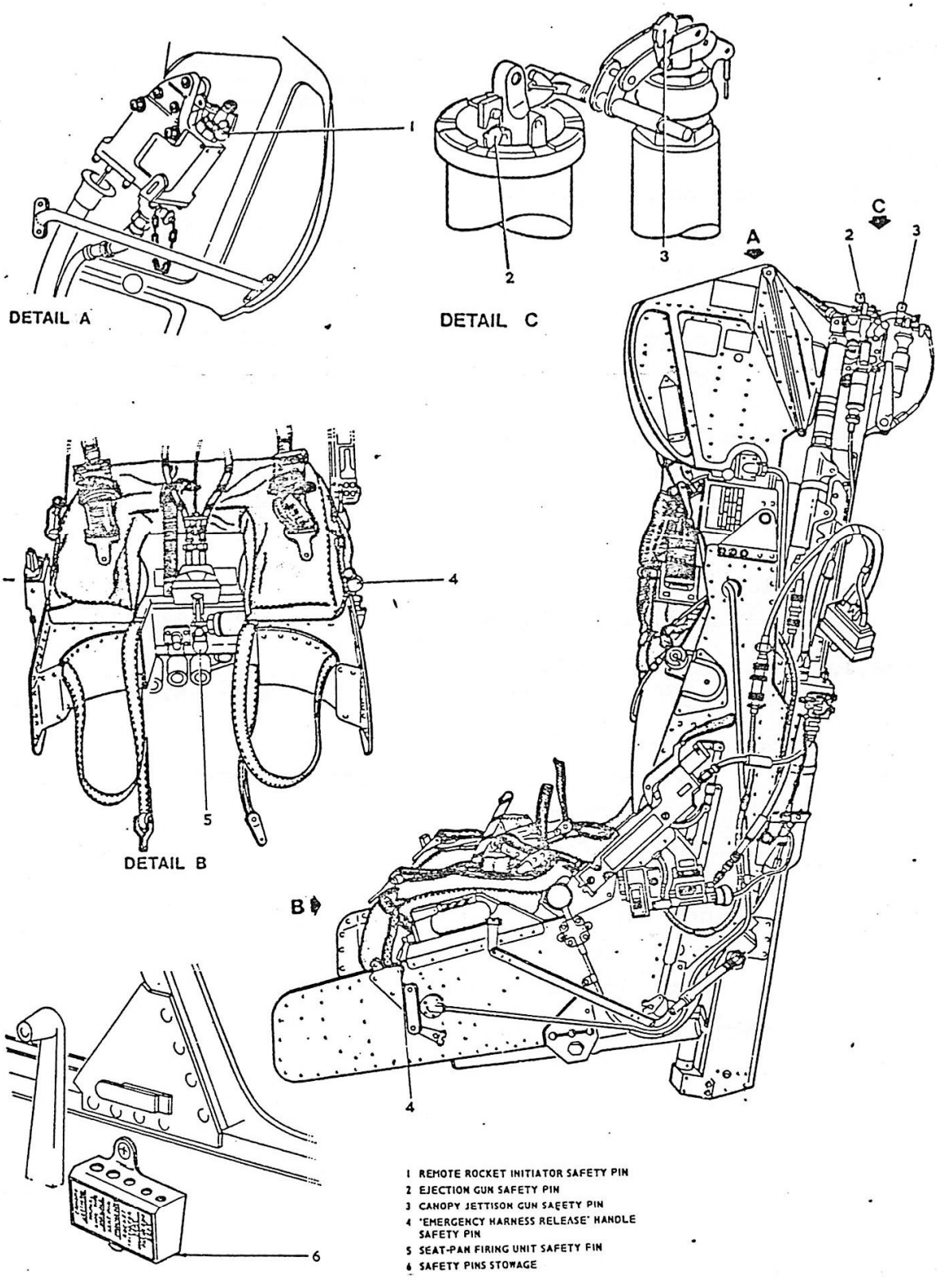

FIG. 3 EJECTION SEAT SAFETY PINS

3.1.1. (contd)

Safety devices are provided to obviate this danger, and it is the responsibility of the person working on or in the vicinity of the ejection seat or its associated escape systems to ensure that the necessary safety precautions and safety pins are fitted during servicing procedures. The serious consequences attending failure to observe safety precautions can not be over emphasised.

3.1.2. Pre-Flight - Safety Pins (Fig 3).

Whilst the aircraft is serviceable the following ejection seat safety pins must be inserted in their respective gun operating sears and handles:

Seat Pan Firing Unit Sear. 5

Rocket Motor Firing Unit Sear. 1

Manual Separation Handle. 4

Canopy Jettison Firing Unit Sear. 3

3.1.3. Servicing - Safety Pins. (Fig 3).

If any minor or major servicing is to be carried out on or in the vicinity of the ejection seat or its associated escape system, the previously listed safety pins are insufficient to prevent inadvertent operation of the ejection seat. In which case the following safety pins must be inserted in their respective firing units and operating handles.

Seat Pan Firing Unit Sear 5

Rocket Motor Firing Unit Sear. 1

Manual Separation Handle. 4

Ejection Gun Firing Unit Sear. 3

Canopy Jettison Firing Unit Sear. 2.

~~Remove The G.R. Pin From The Drogue Gun Trip Rod And Fit It Into The Drogue Gun Safety Lock.~~

3.2. General Fire Precaution.

Smoking and naked lights are prohibited at all times within 15 metres of the aircraft.

3.3. Safety Devices. (Fig 4).

3.3.1. Cockpit Safety Cord. (Fig 5).

A safety cord, having ~~four~~ THREE locking devices is stowed in the

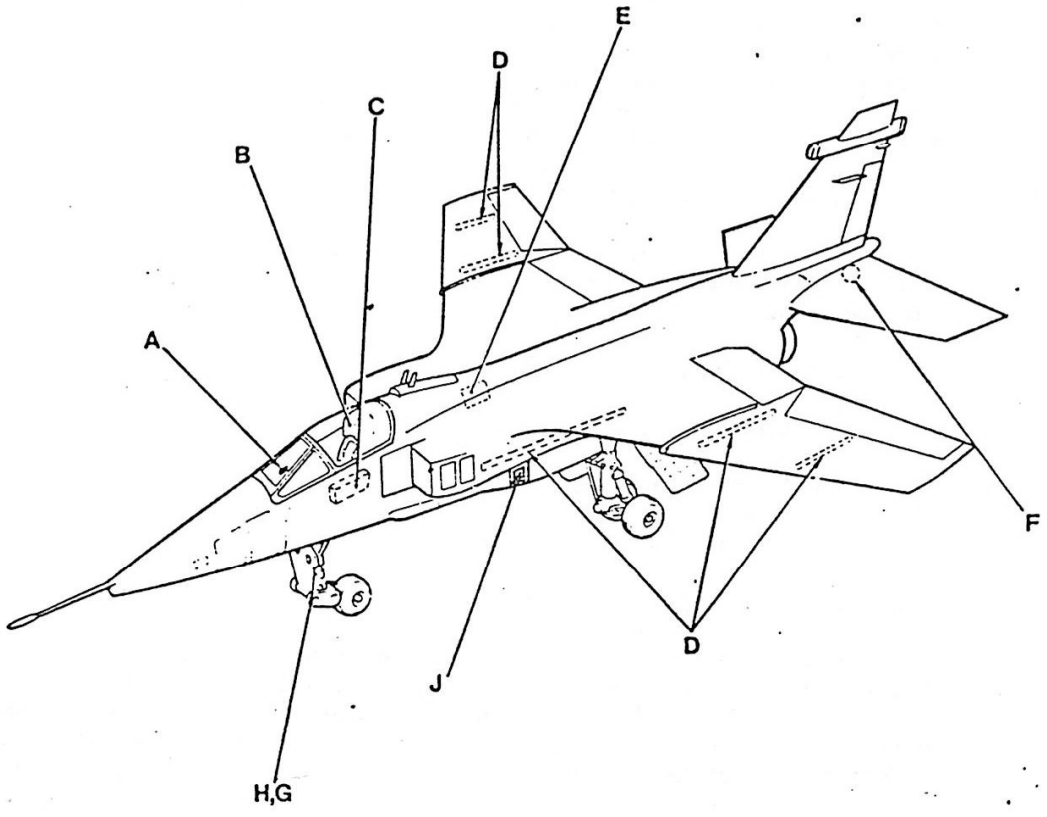

DETAIL A – SEAT AND CANOPY JETTISON GUN SAFETY PINS STOWAGE	FIG. 3	
DETAIL B – SEAT AND CANOPY JETTISON GUN SAFETY PINS		
DETAIL C – PORT CONSOLE SAFETY DEVICES	FIG. 5	
DETAIL D – ARMAMENT PYLON SAFETY PINS	FIG. 10	
DETAIL E – STOWAGE FOR SPARE E.R.U. SAFETY PINS (FRAME 20, STARBOARD)		
DETAIL F – ARRESTER HOOK SAFETY DEVICE	FIG. 6	
DETAIL G – NOSE WHEEL STEERING DISCONNECTION DEVICE	FIG. 7	
DETAIL H – NOSE WHEEL STEERING LOCKING DEVICE		
DETAIL J – UNDERCARRIAGE DOORS SELECTOR SAFETY DEVICE	FIG. 8	

FIG. 4 SAFETY DEVICES

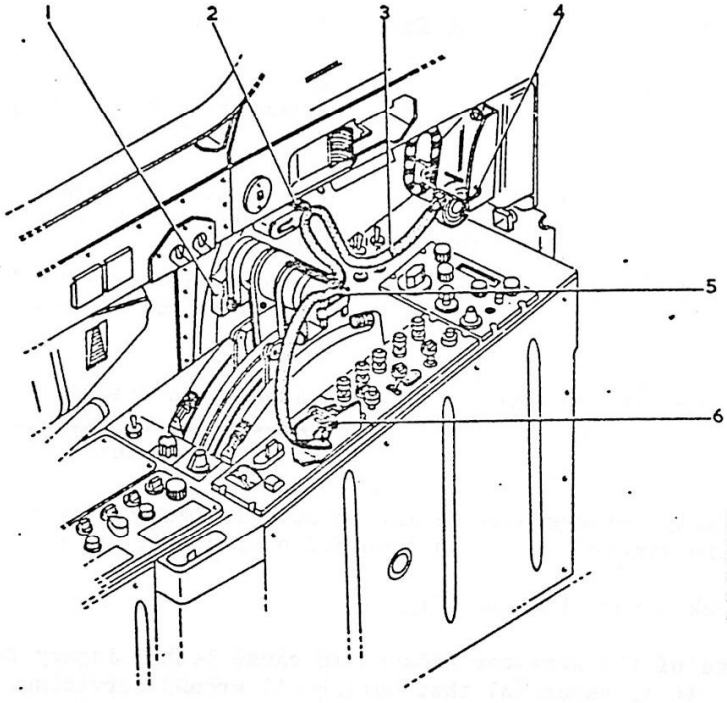

1 SAFETY DEVICES STOWAGE (POST MOD.406)
2 ARRESTER HOOK SAFETY PIN
3 SECURITY CORD
4 UNDERCARRIAGE SAFETY PIN
5 AIR BRAKES SAFETY PIN
6 FLAPS SAFETY PIN

FIG. 5 PORT CONSOLE SAFETY DEVICES

3.3.1. (contd)

cockpit and is used to lock the following controls:-

Arrester Hook Lever.	Safety clip fits over the arrester hook operating lever in the cockpit.
Undercarriage selector unit.	Pin located through selector lever bracket in cockpit.
Air brake control.	Horse Shoe shaped ground lock fitted behind the S/W in the cockpit.
~~Flap Selector Switch.~~	~~Safety Clip fitted over Flap S/W in the cockpit fits through flap S/W bracket.~~

The safety devices must be fitted at all times during ground servicing and are removed only upon completion of pre-flight servicing.

3.3.2. Arrester Hook External Lock. (Fig 6).

Release of the Arrester Hook could cause lethal injury to personnel. It is essential that during all ground servicing, in addition to the arrester hook lever lock, the arrester hook external lock is fitted and is removed only IMMEDIATELY prior to flight.

3.3.3. Undercarriage - Door Safety Devices (Fig 6).

Before operating the undercarriage doors during ground servicing ensure that the immediate area is clear of personnel and ground equipment. When the undercarriage door operating switch has been selected to the open position the switch safety pin must be fitted immediately.

The closed position must only be selected immediately prior to closing the undercarriage doors with hydraulic power readily available.

3.3.4. Airbrake Safety Locks.

Before operating the air brakes during ground servicing ensure that the immediate area is clear of personnel and ground equipment. When the airbrake operating switch has been selected to the open position the switch safety pin and airbrake jack locking-collars must be fitted immediately. The closed position must only be selected immediately prior to closing the airbrakes with hydraulic power readily available.

3.4. Aircraft Towing. (Fig 7).

Before towing the aircraft ensure that the nose wheel steering mechanism is disengaged using the special tool.

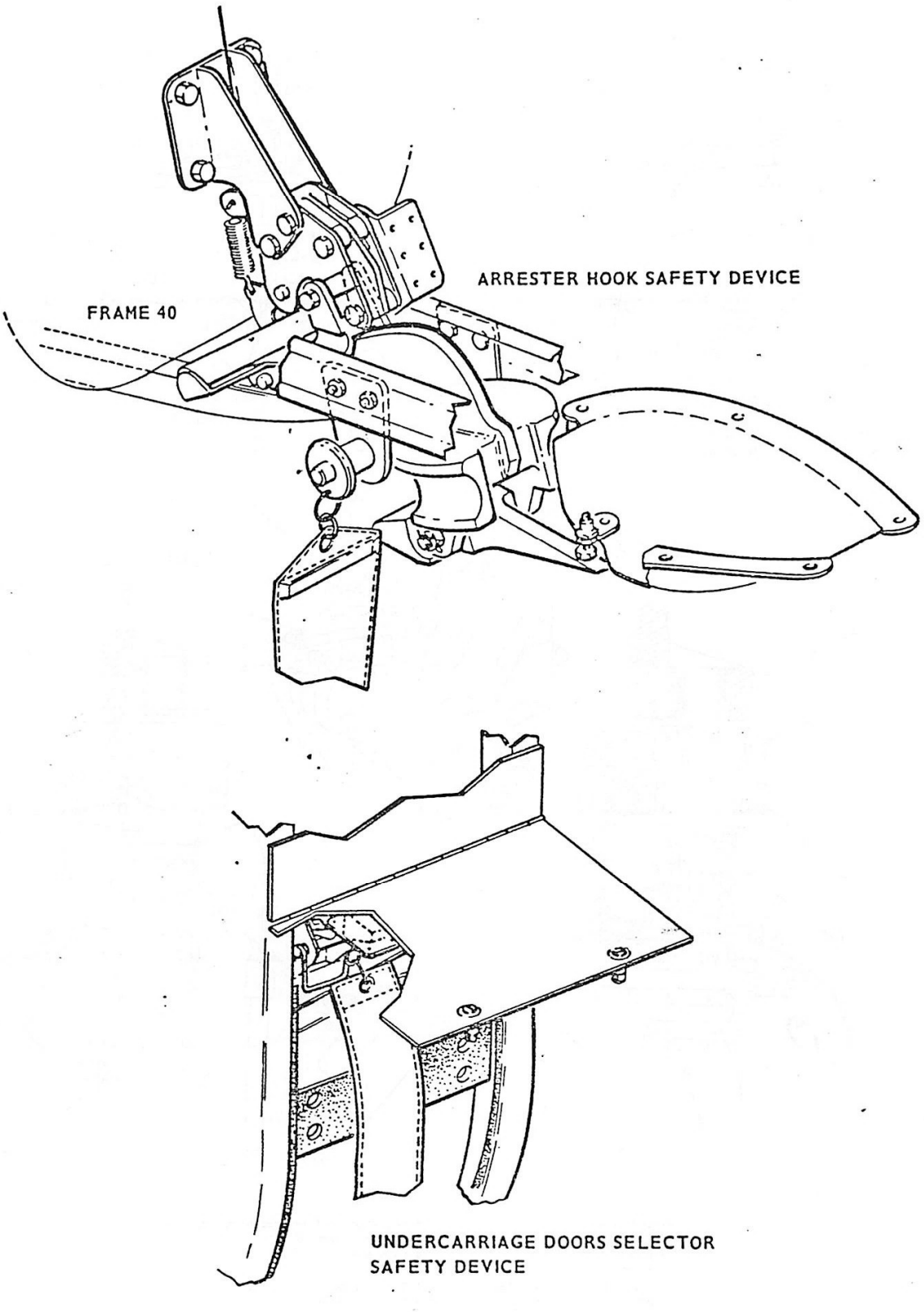

FIG. 6 ARRESTER HOOK AND UNDERCARRIAGE DOOR

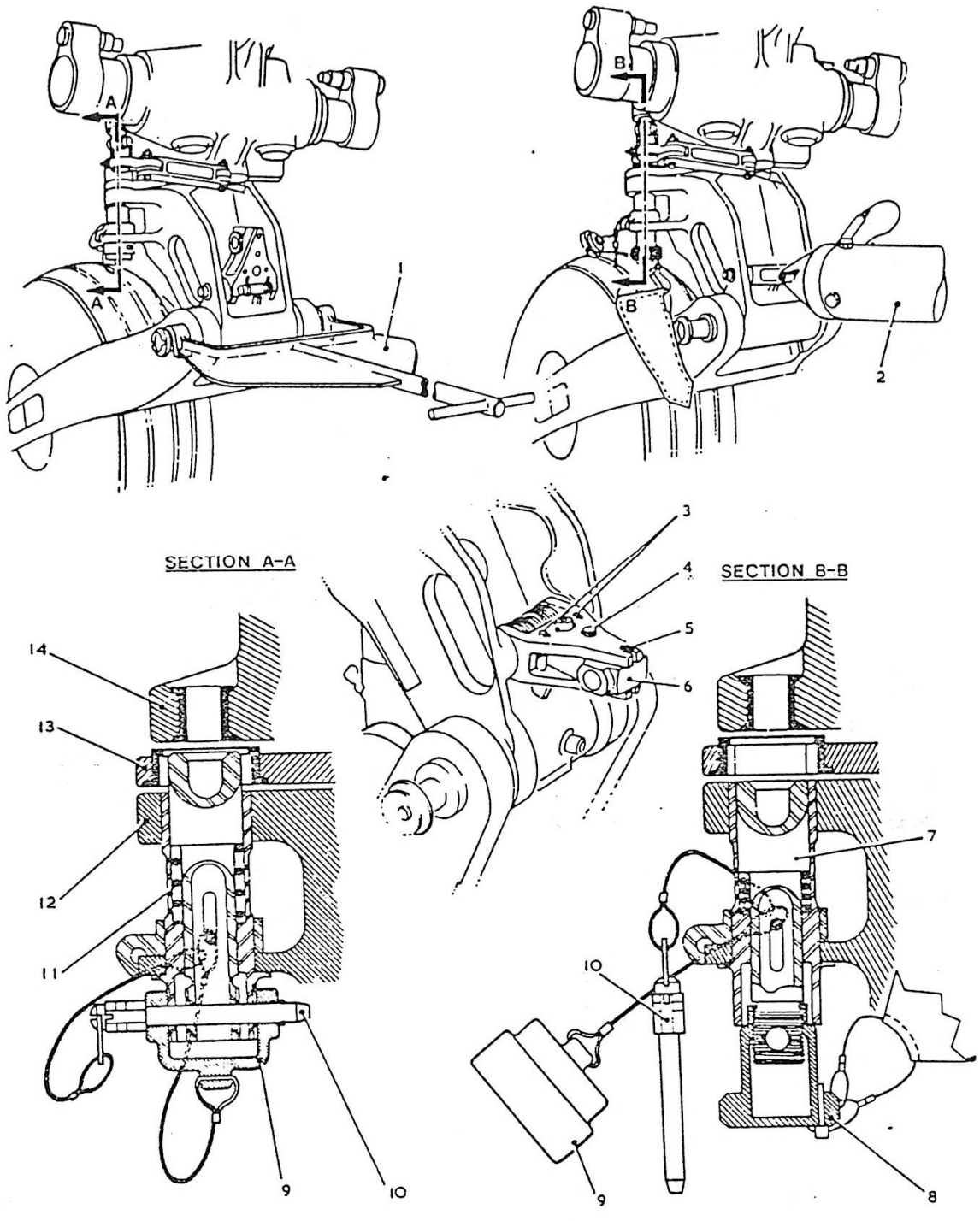

1 STEERING ARM
2 TOWING ARM
3 REPLACEMENT SHEAR PINS
4 TRACTION SHEAR PIN
5 TORSION SHEAR PIN (POST MOD.628)
6 TOWING FITTING
7 LOCKING PIN
8 NOSE WHEEL STEERING DISCONNECTION DEVICE
9 PROTECTION CAP
10 LOCKING PIN
11 RETURN SPRING
12 ROTARY TUBE
13 TOOTHED SLEEVE
14 BOX

FIG. 7 TOWING

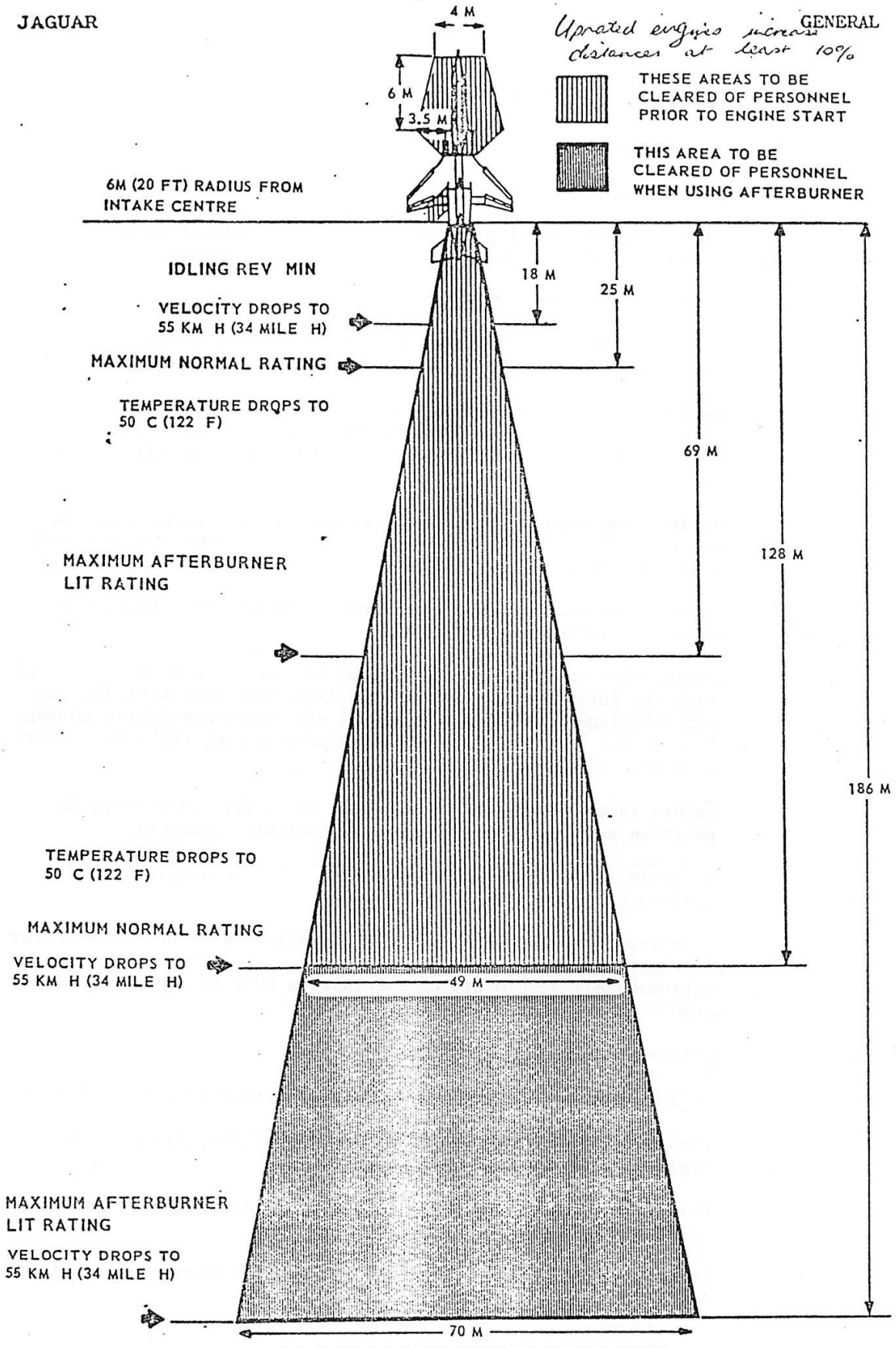

FIG. 8 ENGINE RUNNING DANGER ZONES

3.5. Engine Running.

3.5.1. Danger Areas. (Fig 8).

During engine starting and running it is essential that personnel keep well clear of the engine air-intakes and jet pipes.

3.5.2. Preparation for Engine Running.

Prior to engine starting and running for ground servicing, the following precautions must be observed:-

Head the aircraft into wind, and if possible, ensure that the aircraft is positioned clear of other aircraft and buildings, paying particular attention to the area behind the engine jet pipes.

If fuel has been spilt in the vicinity of the aircraft it must be mopped up or washed away and/or the aircraft moved to an uncontaminated area.

Ensure that the ground area around and behind the aircraft is clear of equipment and debris.

Ensure that the intake and jet pipe blanks are removed and check that the intakes and jet pipes are free from lose articles and accumulations of fuel and oil. Fit the necessary debris guards. if only one engine is to be run the blanks must still be removed from both engines.

Ensure that the brakes are applied, that wheel chocks are in position and that the aircraft is adequately anchored.

Suitable fire extinguishing equipment must be available and positioned adjacent to the aircraft.

Whenever possible all cowlings and panels are to be closed prior to engine running. All panels forward of the air intakes and approximately 1.00 m aft of the intakes MUST be closed and secured prior to engine running.

3.5.3. Precautions During Engine Running.

During engine running the following precautions must be observed:-

Those personnel working in the vicinity of the aircraft and engines must wear ear defenders. (Fig.9).

Easily detachable clothing such as loose scarves, hats etc., must not be worn.

Personnel must keep clear well of the air intakes and jet pipes (Fig 6).

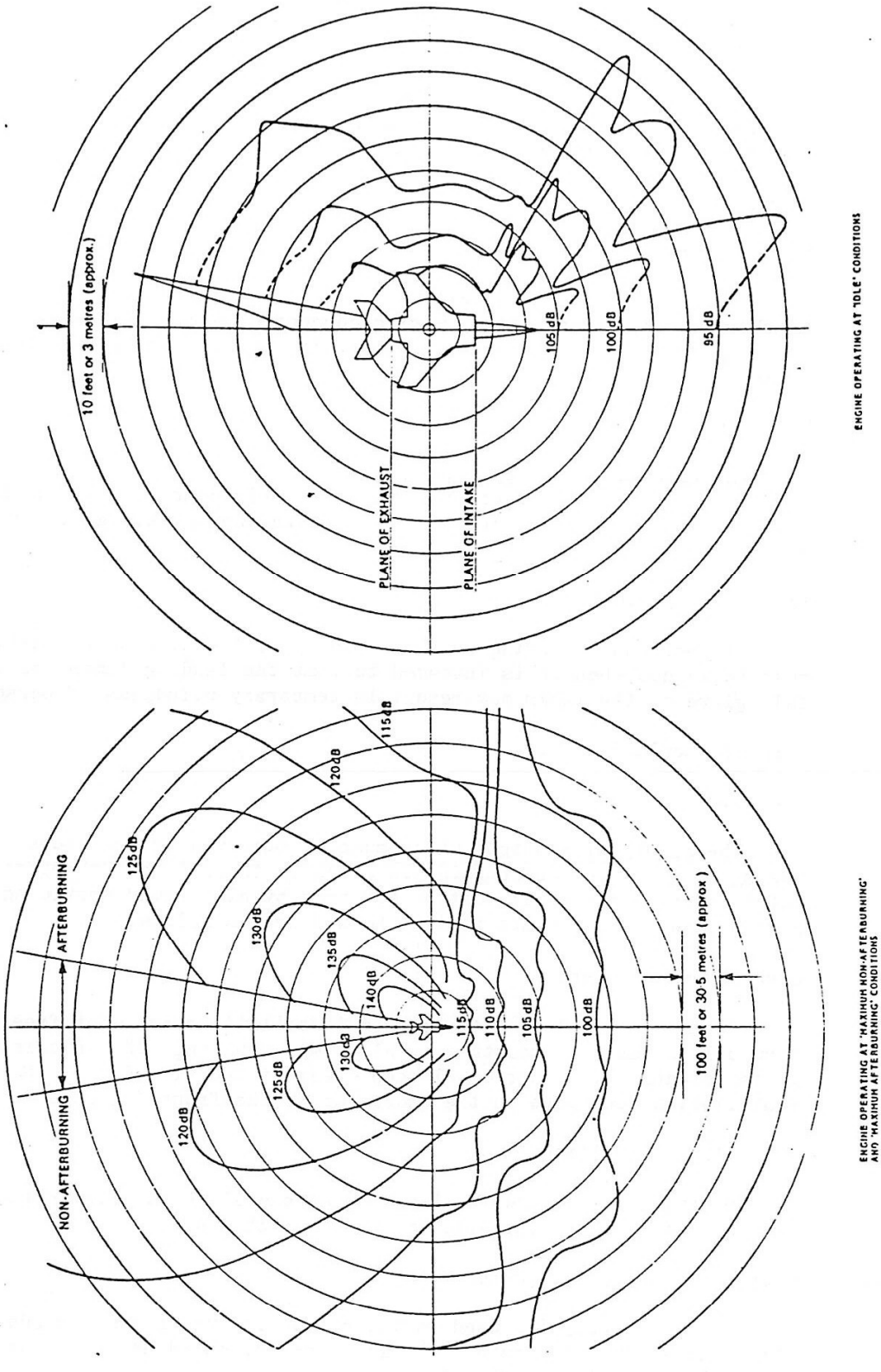

FIG. 9 NOISE INTENSITY ZONES

3.5.3. (contd)

A member of the ground crew must be stationed in a 'safe area' where he can see all other members of the ground crew and also be visible himself by the operator in the cockpit.

3.6. Electrical.

3.6.1. A/C.Supplies.

The 115/200 volts a.c. electrical supplies can be lethal. Before working on, or disconnecting, wiring connected to a.c. supplies isolate the supply by tripping the appropriate circuit breaker or removing the supply fuse.

3.6.2. H.E. Ignitors.

The electrical energy which may be stored in the condensers of the H.E. ignition units is potentially lethal. Disconnect the L.T. supply and wait at least one minute before handling the units, ignitor plugs or H.T. cable.

3.6.3. Landing Lamps Testing

All personnel working in the vicinity of the nose under-carriage must be warned when it is intended to test the landing lamps, as the full glare of the lamps may result in temporary blindness of personnel.

3.7. Aircraft Replenishing.

3.7.1. General.

The safety precautions which must be observed by operators during aircraft replenishments are given in the relevant chapters. Safety precautions which must be observed by all ground servicing personnel during aircraft replenishments are as follows.

3.7.2. Oxygen Replenishment

It is essential that the oxygen installations are kept free from oil, grease and moisture at all times. During LOX replenishment it is essential that personnel keep clear of the vicinity of the LOX installation vent-pipe on the underside of the front fuselage.

3.7.3. Refuelling/Defuelling.

During refuelling/defuelling operations all electrical circuits not essential to the operation must be switched off.

3.7.4. Propulsion unit, oil replenishment.

The synthetic oils used in the propulsion units contain additives which, if allowed to contact the skin for prolonged periods, can be toxic through skin absorption.

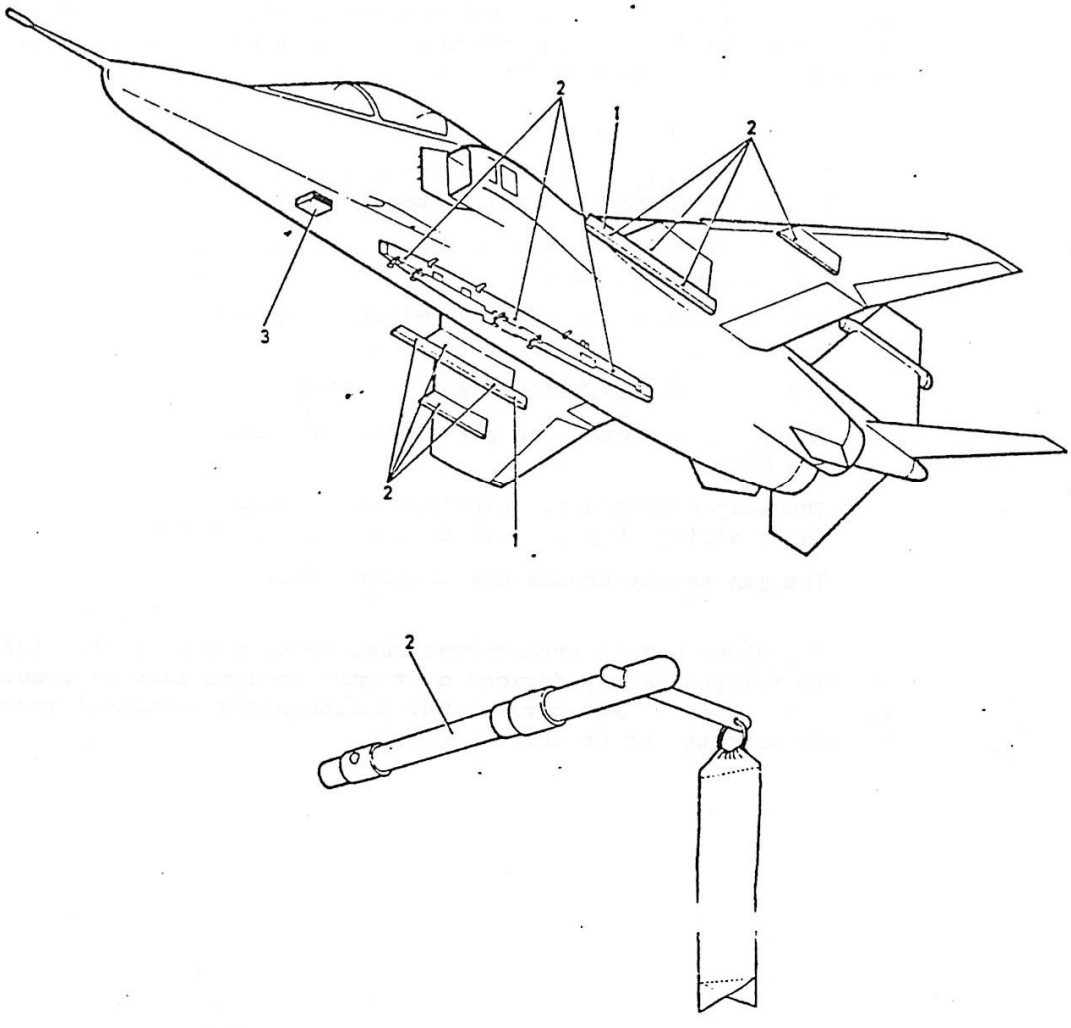

NOTE...
SPARE E.R.U. SAFETY PINS ARE STOWED IN A CONTAINER
LOCATED UNDER AN ACCESS PANEL AT FRAME 20, STARBOARD

1 TANDEM BOMB CARRIER
2 GROUND SAFETY LOCK PIN (PART NO.AJJ6193-630B FOR 119 E.R.U.'S)
(PART NO.AMO7370-116B FOR 120 E.R.U.'S)
3 W.C.S. MAIN UNIT.

FIG. 10 PYLON AND ADAPTER SAFETY PINS

3.8. Armament And External Stores.

Under no circumstances are servicing personnel allowed to work on an aircraft that carries armament, or external stores, until all armament systems have been made safe and pylon safety pins fitted by qualified personnel. When an aircraft is armed the following conditions must be fulfilled:-

The aircraft is to face a safe direction.

'Aircraft armed' warning notices are displayed in each cockpit and outside the aircraft.

Ground safety pins are fitted to all external pylons and weapons where applicable. (FIG 10).

The armament master safety switch is selected to 'SAFE'.

The late arm 'SWITCH' is set to 'SAFE'.

The pylon selector and gun firing switches are OFF.

The weapon main unit selectors in the nose undercarriage bay are set to the Blank position.

The gun safety breaks are disconnected.

The above safety precautions must be enforced at all times and the various safety devices must only be cancelled or removed when authorised. At no time must unauthorised personnel touch the armament stores or their controls.

CHAPTER. 2.

ACCESS PANELS, ZONE AREAS, DRAINS & EXTERNAL MARKINGS

CONTENTS

1. INTRODUCTION.
2. SCREWS.
3. EQUIPMENT & ZONES.
4. NO STEP ZONES.
5. DRAIN & BLEED POINTS.
6. EXTERNAL & SERVICING POINT.

LIST OF ILLUSTRATIONS.

FIG.1. PORT EXTERNAL DOORS & PANELS.
FIG.2. STARBOARD EXTERNAL DOORS & PANELS.
FIG.3. UPPER SURFACE DOORS & PANELS.
FIG.4. LOWER SURFACE DOORS & PANELS.
FIG.5. INTERNAL DOORS & PANELS.
FIG.6. EQUIPMENT ZONES (FUSELAGE & TAIL UNIT).
FIG.7. EQUIPMENT ZONES (MAINPLANES).
FIG.8. NO STEP ZONES.
FIG.9. DRAIN & BLEED POINTS.
FIG.9a. SERVICING POINTS.
FIG.10. SERVICING POINTS.
FIG.11. SERVICING POINTS STARBOARD SIDE.
FIG.12. SERVICING POINTS LOWER SURFACE.

LIST OF TABLES.

1. FRONT FUSELAGE DOORS AND PANELS.
2. CENTRE FUSELAGE DOORS AND PANELS.
3. REAR FUSELAGE DOORS AND PANELS.
4. MAIN PLANE PANELS.
5. INTERNAL DOORS AND PANELS.
6. EQUIPMENT ZONES, FUSELAGE & TAIL.
7. EQUIPMENT ZONES, MAINPLANES.
8. DRAIN & BLEED POINTS.
9. EXTERNAL & SERVICING POINTS IDENTIFICATION.

CHAPTER. 2.

ACCESS PANELS, ZONE AREAS, DRAINS & EXTERNAL MARKINGS.

1. INTRODUCTION.

1.1. Access Panels.

There are numerous zone areas, doors and access panels which have been specially designed to give maximum access and easy identification to exact location, of system components and structure.

Frequently opened panels and doors to various equipment and compartments are provided with SHOOT BOLT type fastenings or CAMLOC type quick release fasteners. Access panels requiring less frequent removal are secured by normal type screws all heads being formed with torque set heads.

Stressed panels are secured by CAMLOC Multi-Start screws and Non-Stressed panels secured by L'HOTELLIER $\frac{1}{4}$turn fasteners. In both cases the screw head accepts cruciform adaptors.

1.2. Identification of Doors and Panels.

The identification of doors and access panels is arranged by sections:-

Front Fuselage Panels are numbered from	1	-	99
Centre Fuselage Panels are numbered from	100	-	199
Rear Fuselage Panels are numbered from	200	-	299
Mainplane Panels are numbered from	300	-	399

Additional meanings of the numbers are:-

Odd numbers, port side

Even numbers, starboard side

Numbers ending in 0, aircraft centre line and, if they are followed by a suffix:

1, For the upper surface
2. For the lower surface

The first number in each section is:

For the fuselage, the door or panel furthest forward

For the main plane, the door or panel nearest the aircraft centre line.

1.2. contd.

Numbering of the doors and panels is common to all versions of the Jaguar. Certain numbers may therefore be missing from the sequence of numbers in the particular section.

2. SCREWS.

The drive-end profile of the screwdrivers used must fit exactly in the screw slot and must be serviceable.

In general, the diameter and length of the screws have been made uniform for the same door or panel. Carefully examine the screws removed. Replace them immediately by screws of the same reference if damaged (tearing of slots, crossed or damaged threads, etc).

NOTE: A considerable amount of time will be lost in removing a damaged screw, or replacing a captive nut which has been made useless by an unserviceable screw. The attachment screws for each door, or panel should be placed in a canvas bag and attached to the door or panel in question.

3. EQUIPMENT & ZONES.

The aircraft is divided into zone areas for ease of identification and location. There are two different types of zone areas listed below:-

Equipment Zone Areas.

Non-Walkway Areas.

The identification of the zones is arranged by sections, these being:-

Front fuselage, 000 to 090

Centre fuselage, 100 to 190

Rear fuselage and tail unit, 200 to 290

Main plane, 300 to 390

4. NO STEP ZONES.

Main plane moving surfaces, and certain access doors and panels of weaker structure are designated as 'no step' zones. They are indentified by the words 'NO STEP' in black lettering.

5. DRAIN & BLEED POINTS.

Various fluid systems and aircraft compartments necessitate a requirement for drainage. These items are illustrated in Fig 9 and anotated in Table 8.

6. EXTERNAL MARKINGS & SERVICING POINTS.

International symbols are either painted or stencilled on all external danger areas, test points and system replenishment panels, to enable ground crew personnel to maintain servicing tasks with the minimum of delay. A comprehensive list of international anotations are listed in Fig. 10 and 11.

FRONT FUSELAGE DOORS AND PANELS. - TABLE 1.

Door/Panel No.	Fig.	Components or assemblies accessible.
8-2	4	Access to bolts connecting the front and centre fuselage, X 3 982 starboard
15	1	Blanking plug, access to hauling fitting (port)
16	2	Blanking plug, access to hauling fitting (starboard)
19	1	Access to side box structure - movable stops (port)
21	1	Port gun blast tube
23	1	Access to bolts connecting the front and centre fuselage (port)
24	2	Access to side box structure, pitch controls, emergency parking brake (starboard)
25	1	Access to rudder control bell-crank
26	2	Starboard gun blast tube
28	2	Access to bolt connecting front and centre fuselage (starboard)
30	2	Access to Starec Type 1287 head mount, complete with pitot/static probe
31	1	Access to incidence probe
32	2	Blanking plate for flight refuelling probe zone
33	1	Access to forward equipment compartment (front door)
34	2	Access to replenishment and pressure checking connections for liquid oxygen converter
35	1	Access to forward equipment compartment (rear door)
36	2	Top compartment door
37	1	Windscreen side fairing (port)
38	2	Windscreen side fairing (starboard)
39	1	Access to radar altimeter transmitter/receiver and C.C.S. junction box
40-1	3	Access to brake reservoir bleed valves
40-2	4	Access to pitot static pipelines and incidence probe
41	1	Access to port canopy jettison handle
41-2	4	Pitot system junction unit

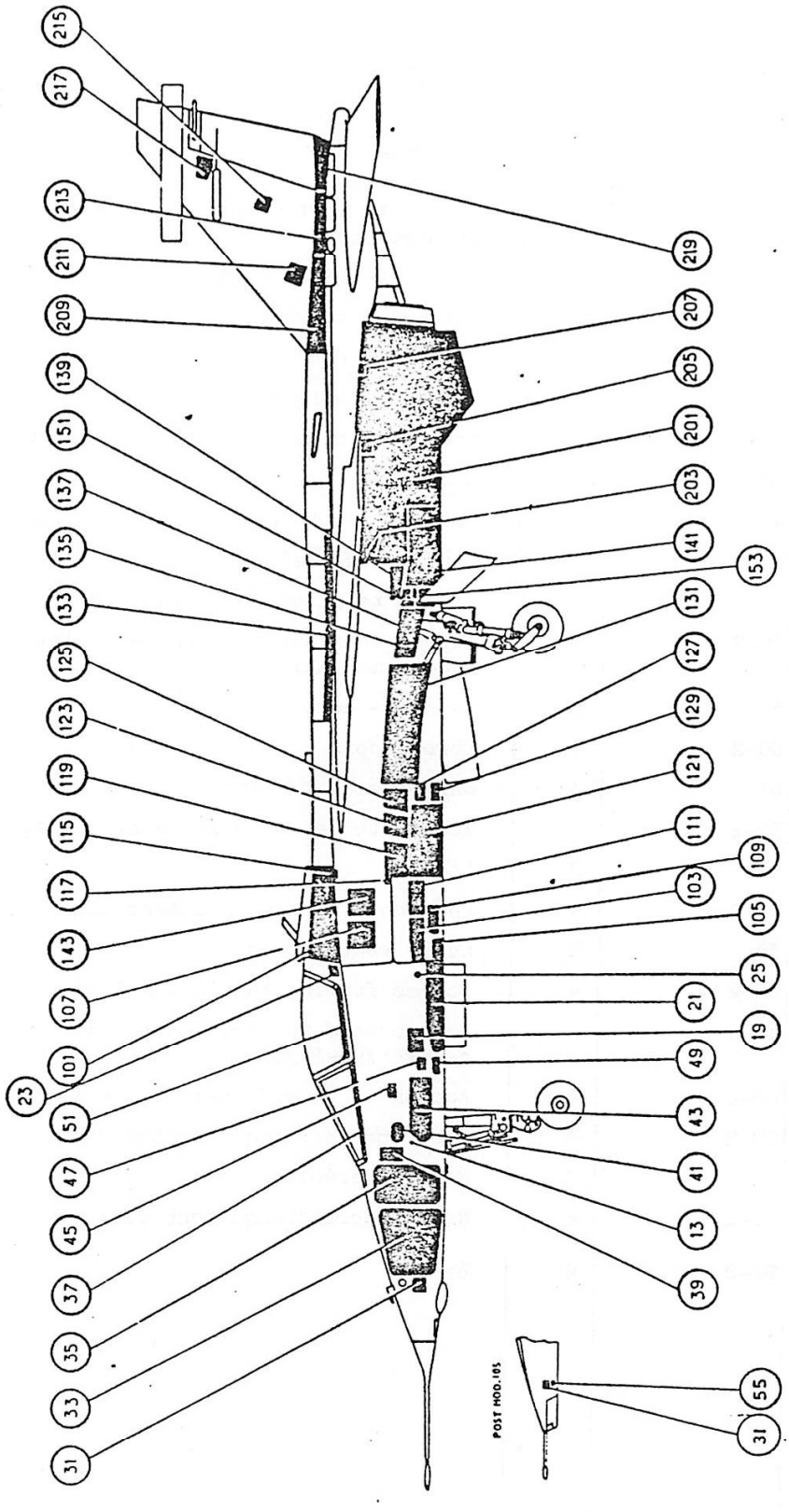

FIG.1 PORT EXTERNAL DOORS AND PANELS

Table 1 (contd)

Door/Panel No.	Fig.	Components or assemblies accessible.
42	2	Blanking plate for flight refuelling probe zone
43	1	Access to port compartment-rudder gearing compartment
43-2	4	Access to pitot/static drain traps
44	2	Access to starboard canopy jettison handle
44-2	4	Starboard door of nose undercarriage
45	1	Pilot's foothold
45-2	4	Access to nose undercarriage strut pin
46	2	Access to AJAX equipment compartment
47	1	Pilot's foothold - access door 533
48	2	Canopy side fairing
49	1	Access to pilot's access ladder hinge pin
49-2	4	Access to front mounting of pilot's access ladder mechanism
50-1	3	Canopy - cockpit access
50-2	4	Lower door
51	1	Canopy side fairing
51-2	4	Access to ladder bearing and control mechanism
52	2	Laser
53-2	4	Port door of nose undercarriage
55	1	Laser ventilation
55-2	4	Access fairing to pilot's ladder
57-2	4	Port access to bolts connecting nose and centre fuselage
60-2	4	Access to pitot/static drain traps
70-2	4	Nose undercarriage forward door
72	2	Flight refuelling
80-2	4	Nose undercarriage read door
90-2	4	Laser

CENTRE FUSELAGE DOORS AND PANELS - TABLE 2.

Door/Panel No.	Fig.	Components or assemblies accessible.
100-1	3	Fairing and front air duct on spine
100-2	4	Centre door on bottom base plate - access to connections of centreline pylon
101	1	Port side spine between X 4 000 and 5 150
101-1	3	Access to top port connection between front and centre fuselage
101-2	4	Access to port connection between front and centre fuselage, between Frames 10 and 11
102	2	Starboard side spine between X 4 000 and 5 150
102-1	3	Access to top starboard connection between front and centre fuselage
102-2	4	Access to starboard connection between front and centre fuselage, between Frames 10 and 11
103	1	Port front top panel between X 4 000 and 5 000
103-1	3	Access to attachment of protective grill
104	2	Starboard front top panel between X 4 000 and 5 000
104-1	3	Access to attachment of protective grill
105	1	Access to port blast tube
105-1	3	Access door to lifting point
105-2	4	Port door - access to fuel cocks, Frame 15
106	2	Access to starboard gun deflector
106-1	3	Access door to lifting point
106-2	4	Starboard door - access to fuel cocks, Frame 15
107	1	Front door - air intake on port duct
107-1	3	Port panel over fuel tank F3
107-2	4	Port door - access to link compartment
108	2	Front door - air intake on starboard duct
108-1	3	Starboard panel over fuel tank F3
108-2	4	Starboard door - access to link compartment
109	1	Access to port gun barrel support
109-2	4	Front bottom door - port main undercarriage

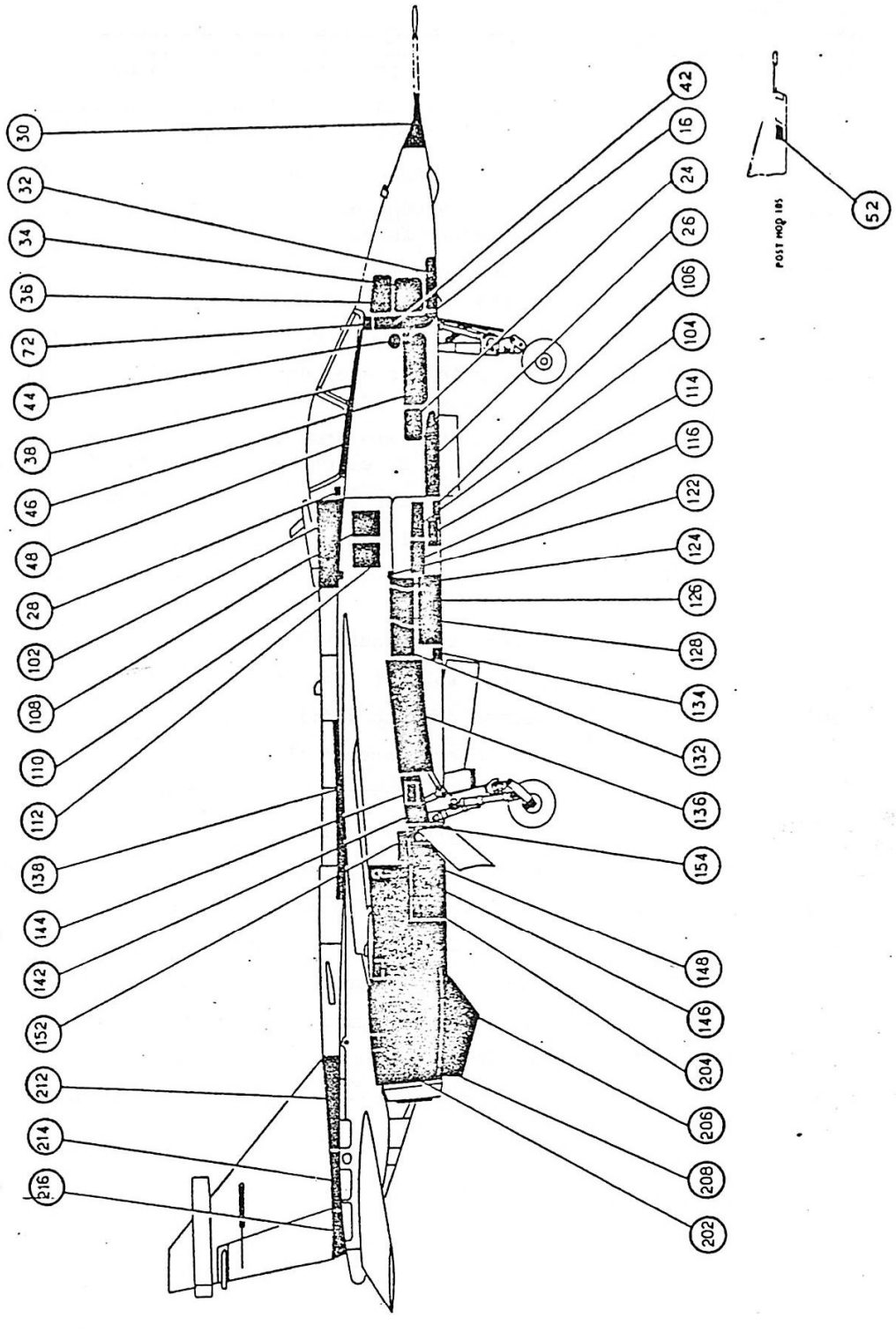

FIG.2 STARBOARD EXTERNAL DOORS AND PANELS

Table 2 (contd).

Door/Panel No.	Fig	Components or assemblies accessible.
110-1	3	Fairing and centre air duct on spine - access to secondary heat exchanger
111	1	Port rear top panel between X 4 000 and 5 000
111-2	4	Port access to mounting for connection of centreline pylon
112	2	Rear door - air intake on starboard duct
112-2	4	Front bottom door - starboard main undercarriage
113	1	Rear door - air intake on port duct
113-2	4	Auxiliary door, port main undercarriage
114	2	Access to starboard gun barrel support
114-2	4	Starboard access to mounting for connection of centreline pylon
115	1	Access to port top connection of Frame 15 on air intake
116	2	Starboard top rear panel between X 4 000 and 5 000
116-2	4	Auxiliary door, starboard main undercarriage
117	1	Access to port bottom connection of Frame 15 on air intake
118	2	Access to starboard top connection of Frame 15 on air intake
119	1	Port front central side between X 5 000 and 6 080
120-1	3	Fairing and rear air duct on spine
121	1	Port door, access to gun
122	2	Access to starboard bottom connection of Frame 15 on air intake
123	1	Port door, access to ammunition
124	2	Starboard front central side between X 5 000 and 6 080
125	1	Port rear central side between X 5 000 and 6 080
126	2	Starboard door, access to gun
127	1	Access door: telebriefing installation - ground control of undercarriage doors - electrical generation system test point
128	2	Starboard door, access to ammunition

Table 2 (contd)

Door/Panel No.	Fig.	Components or assemblies accessible.
129	1	Access to ground electrical connections
130-1	3	Spine between X 5 150 and 6 000
131	1	Front top door, port main undercarriage
132	2	Starboard rear central side between X 5 000 and 6 080
133	1	Port cover strip on spine
134	2	Access to power take-off points
135	1	Port rear vertical panel
136	2	Front top door, starboard main undercarriage
137	1	Access door: autostabilizers test point - TACAN test point
138	2	Starboard cover strip on spine
139	1	Access to port ground hydraulic power connection
140-1	3	Spine between X 6 000 and 6 875
141	1	Port air brake: Access to hydraulic services points and starting generator
142	2	Starboard rear vertical panel
144	2	Access to refuelling/defuelling panel
146	2	Starboard air brake: access to hydraulic services points - pressurized refuelling point starting air generator oil tank
148	2	Access to starboard ground hydraulic power connection
150-1	3	Spine between X 6 875 and 7 750
151	1	Access to air brake hinge
151-2	4	Access to air brake hinge
152	2	Access to air brake hinge
152-2	4	Access to air brake hinge
153	1	Access to air brake hinge
154	2	Access to air brake hinge
160-1	3	Spine between X 750 and 8 725

REAR FUSELAGE DOORS AND PANELS. - TABLE 3.

Door/Panel No.	Fig.	Components or assemblies accessible.
200-1	3	Access: heat exchanger - hydraulic controls - centre fuel tank pressurization system - control cables for arrester hook and brake parachute
200-2	4	Access: No.1. engine ignition - No.2. engine amplifier - No.2. engine fire detection.
201	1	Access: No.1. engine equipment - hydraulic pump - a.c. generator
201-1	3	Access: hydraulic accumulator and equipment, circuit No.1.
201-2	4	Access: door brace-strut support hole, engine No.1.
202	2	Access. No.2. engine equipment - hydraulic pump - a.c. generator
202-1	3	Access: hydraulic accumulator and equipment, circuit No.2.
202-2	4	Access: door brace-strut support hole, engine No.2.
203	1	Access: hydraulic filter clogging indicators
203-1	3	Access: hydraulic reservoir and equipment, circuit No.1.
203-2	4	Access: pressurized oil filling, engine No.1.
204	2	Access: hydraulic filter clogging indicators
204-1	3	Access: hydraulic reservoir and equipment, circuit No.2.
204-2	4	Access: pressurized oil filling, engine No.2.
205	1	Access: central lifting cable access for removal of engine No.1.
205-1	3	Access: port hydraulic services isolation resetting plunger
205-2	4	Access: bottom door attachment, engine No.1.
206	2	Access: central lifting cable access for removal of engine No.2.
206-1	3	Access: starboard hydraulic services isolation resetting plunger
206-2	4	Access: bottom door attachment, engine No.2.
207	1	Access: top door attachment, engine No.1.
207-1	3	Access: fittings of fuel tank F4

Table 3 (contd)

Door/Panel No.	Fig.	Components or assemblies accessible
208	2	Access: top door attachment, engine No.2.
208-1	3	Access: fittings of fuel tank F4.
208-2	4	Access: ventral keel - T.G.T. and L.P. shaft speed limiter
209	1	Access: hydraulic equipment - flying controls arrester hook control.
209-1	3	Access: fuel system and fittings
209-2	4	Access: ventral keel - T.G.T. and L.P. shaft speed limiter
210-1	3	Access: reservoir pressurization gauge and valve - fuel vent valve - arrester hook and brake parachute controls
210-2	4	Access: engine test set connection points
211	1	Access: radar detector receiver
211-1	3	Access: fuel system and fittings
211-2	4	Access: hydraulic hand-pump
212	2	Access: flying controls hydraulic equipment
212-1	3	Access: fuel system and fittings
212-2	4	Access: hydraulic hand-pump
213	1	Access: flying controls hydraulic equipment arrester hook - brake parachute
213-1	3	Access: rear lifting point, engine No.1.
214	2	Access: flying controls hydraulic equipment fuel vent pipe
214-1	3	Access: fuel system and fittings
215	1	Access: magnetic detector
215-1	3	Access: fuel system and fittings
216	2	Access: brake parachute operating mechanism
216-1	3	Access: rear lifting point, engine No.2.
217	1	Access: I.L.S. aerial matching unit
217-1	3	Access: port top portion, fuel tank F4.

Table 3 (contd)

Door/Panel No.	Fig.	Components or assemblies accessible
218-1	3	Access: fuel system and fittings
219	1	Access: brake parachute operating mechanism
219-1	3	Access: extinguisher - flying control hydraulic equipment- tail plane differential actuator
220-1	3	Access: pressure tapping
220-2	4	Access: ignition system, engine No.2 - amplifier, engine No.1. fire detecting system, engine No.2. - arrester hook jack
221-1	3	Access: mounting of tail plane
222-1	3	Access: top portion of fuel tank F4
223-1	3	Access: tail plane P.F.C.U. - differential tail-plane actuator - hydraulic pressure switch
224-1	3	Access: hydraulic equipment - undercarriage controls - fire bottles
225-1	3	Access: hydraulic controls - rudder P.F.C.U. brake parachute operating control
226-1	3	Access: mounting of tail plane
228-1	3	Access: No.2 system, tail plane P.F.C.U. - flying controls - hydraulic pressure switch
232-1	3	Access: hydraulic controls - rudder P.F.C.U. brake parachute control
233-1	3	Access: tail-plane pivot
234-1	3	Access: tail-plane pivot

MAIN PLANE PANELS - Table 4.

Panel No.	Fig.	Components or assemblies accessible
[illegible]-1	3	Access: slat control hydraulic motor - main plane/fuselage fuel pipe connections - fuel system high level float switches
301-2	4	Access: flying control lever pin
302-1	3	Access: slat travel limit unit - main plane/fuselage fuel pipe connections - fuel system high level float switches
302-2	4	Access: flying control lever pin
303-1	3	Access: spoilers system trim actuator
304-1	3	Access: starboard spoiler control
305-1	3	Access: transmission system, port slat control
306-1	3	Access: transmission system, starboard slat control
307-1	3	Access: port top rear main plane/fuselage connection
307-2	4	Port cover panel
308-1	3	Access: starboard top rear main plane/fuselage connection
308-2	4	Starboard cover panel
309-1	3	Access: port spoiler control
309-2	4	Access: port bottom rear main plane/fuselage connection
311-1	3	Access: port inboard flap
311-2	4	Access: Jacks I and II, port inboard flap - spoiler P.F.C.U. pipe joints
312-1	3	Access: starboard spoiler control
312-2	4	Access: starboard bottom rear main plane/fuselage connection
313-1	3	Access: port inboard flap track
313-2	4	Access: transmission system, port slat control
314-1	3	Access: starboard inboard flap track
314-2	4	Access: Jacks I and IIa starboard inboard flap spoiler P.F.C.U. pipe joints

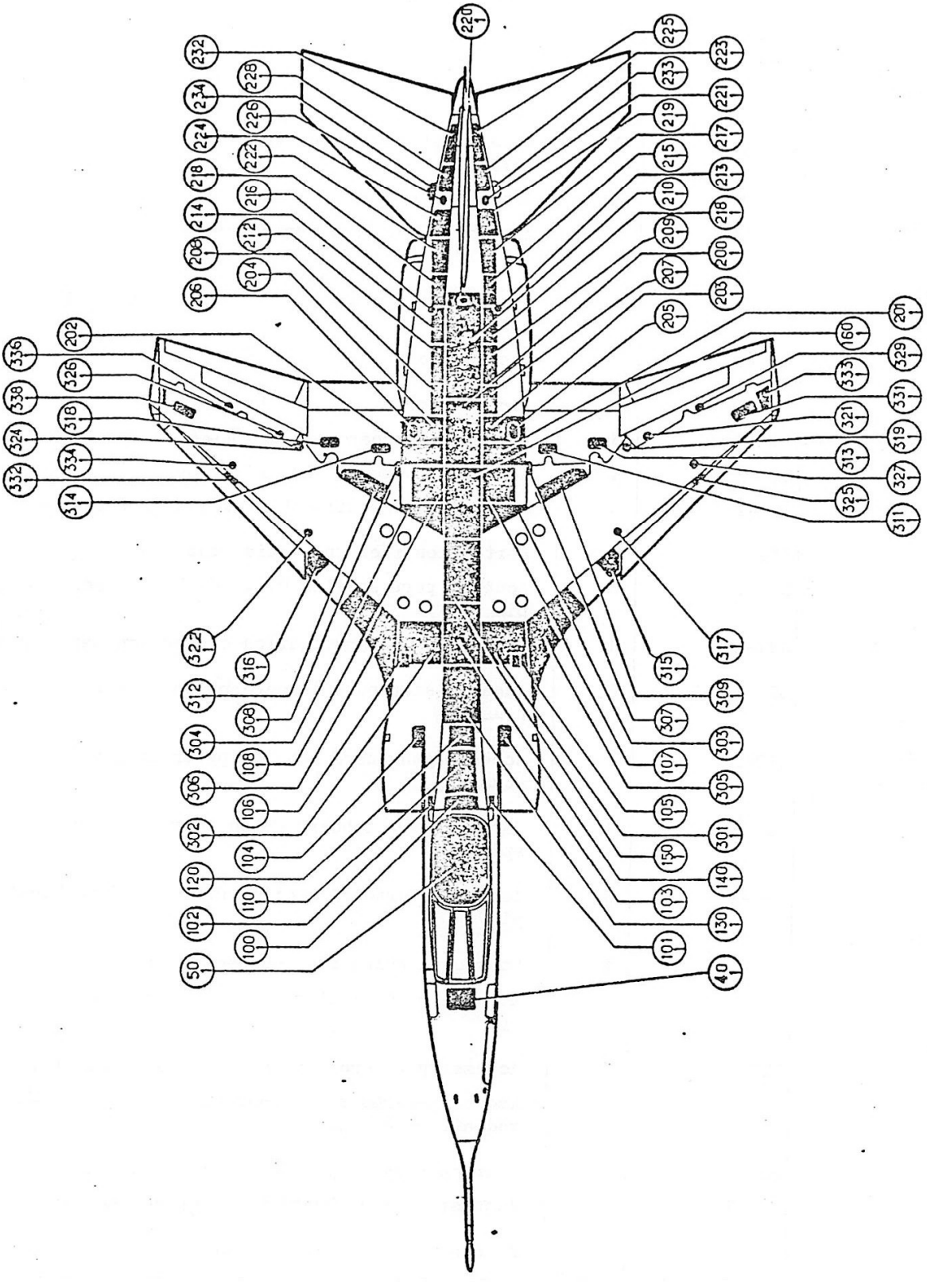

FIG.3 UPPER SURFACE DOORS AND PANELS

Table 4. (contd)

Panel No.	Fig.	Components or assemblies accessible.
315-1	3	Access: electrical connector, port inboard pylon
315-2	4	Access: port inboard pylon
316-1	3	Access: electrical connector, starboard inboard pylon
316-2	4	Access: transmission system, starboard slat control
317-1	3	Access: port inboard pylon spigot housing
317-2	4	Access: port inboard pylon spigot housing
318-1	3	Access: starboard inboard flap track
318-2	4	Access: starboard inboard pylon
319-1	3	Access: port spoiler P.F.C.U. attachment pin
319-2	4	Port pylon fuel connection cap
321-1	3	Access: port spoiler P.F.C.U. rod attachment pin
321-2	4	Port pylon pressurization connection cap
322-1	3	Access: starboard inboard pylon spigot housing
322-2	4	Access: starboard inboard pylon spigot housing
323-2	4	Cap for port inboard pylon rear anti-yaw spigot
324-1	3	Access: starboard spoiler P.F.C.U. attachment pin
324-2	4	Starboard pylon fuel connection cap
325-1	3	Access: electrical connector, port outboard pylon
325-2	4	Access: port spoiler, P.F.C.U. attachment pin
326-1	3	Access: starboard outboard spoiler, P.F.C.U. rod attachment pin
326-2	4	Starboard pylon pressurization connection cap
327-1	3	Access: Port outboard pylon spigot housing
327-2	4	Access: Port spoiler P.F.C.U.

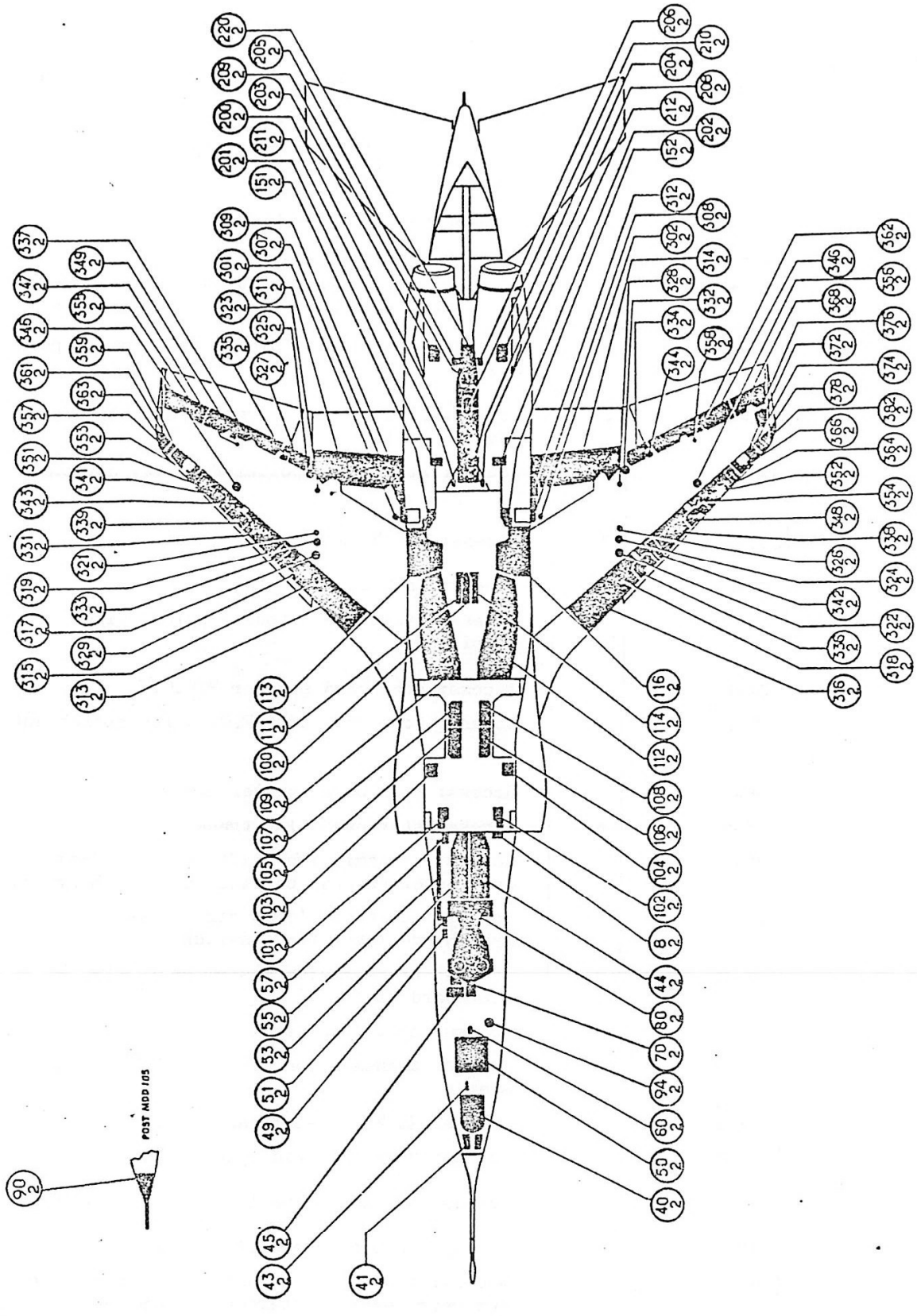

FIG.4 LOWER SURFACE DOORS AND PANELS

Table 4 (contd)

Panel No.	Fig	Components or assemblies accessible.
328-2	2	Cap for starboard inboard pylon rear locating pin
329-1	3	Access: port spoiler hinge
329-2	4	Access: port slat track
331-1	3	Access: port 'stop air' valve - fuel system low level float switch
331-2	4	Access: transmission system and Jack I, port slat
332-1	3	Access: electrical connector, starboard outboard pylon
332-2	4	Access: starboard spoiler P.F.C.U. attachment pin
333-1	3	Access: I.F.F. aerial
333-2	4	Access: Jack I, port slat
334-1	3	Access: starboard outboard pylon spigot housing
334-2	4	Access: starboard spoiler P.F.C.U.
335-2	4	Access: port spoiler P.F.C.U. rod attachment pin
336-1	3	Access: starboard spoiler hinge
336-2	4	Access: starboard slat track
337-2	4	Access: transmission shaft bearing, Jack III, and reduction gear bearing, port outboard flap
338-1	3	Access: starboard 'stop air' valve - fuel system low level float switch
338-2	4	Access: transmission system and Jack Ia, starboard slat
339-2	4	Access: port slat track
341-2	4	Access: transmission system and Jack II, port slat
342-2	4	Access: Jack Ia, starboard slat
343-2	4	Access: port outboard pylon
344-2	4	Access: starboard spoiler P.F.C.U. rod pin
345-2	4	Access: port outboard pylon spigot housing
346-2	4	Access: transmission shaft bearing and reduction gear bearing, starboard outboard flap.

Table 4 (contd)

Panel No.	Fig.	Components or assemblies accessible.
347-2	4	Access: lever hinge pin, port spoiler control
348-2	4	Access: starboard slat track
349-2	4	Access: cap for port outboard pylon rear anti-yaw spigot
351-2	4	Access: Jack II, port slat
352-2	4	Access: transmission system and Jack IIa, starboard slat
353-2	4	Access. outboard track, port slat
354-2	4	Access: starboard outboard pylon
355-2	4	Access: transmission shaft bearings, Jack IV, and reduction gear bearing, port outboard flap
356-2	4	Access: starboard outboard pylon spigot housing
357-2	4	Access: outboard track, port slat
358-2	4	Access: lever hinge pin, starboard spoiler control
359-2	4	Access: Position switch, port slat
361-2	4	Navigation light fairing
362-2	4	Access: cap for starboard outboard pylon rear locating pin
363-2	4	Access: navigation light
364-2	4	Access: Jack IIa, starboard slat
366-2	4	Access: outboard track, starboard slat
368-2	4	Access: reduction gear bearing, starboard outboard flap transmission shaft
372-2	4	Access: outboard track, starboard slat
374-2	4	Access: position switch, starboard slat
376-2	4	Access: TACAN aerial
378-2	4	Navigation light fairing
382-2	4	Access: navigation light

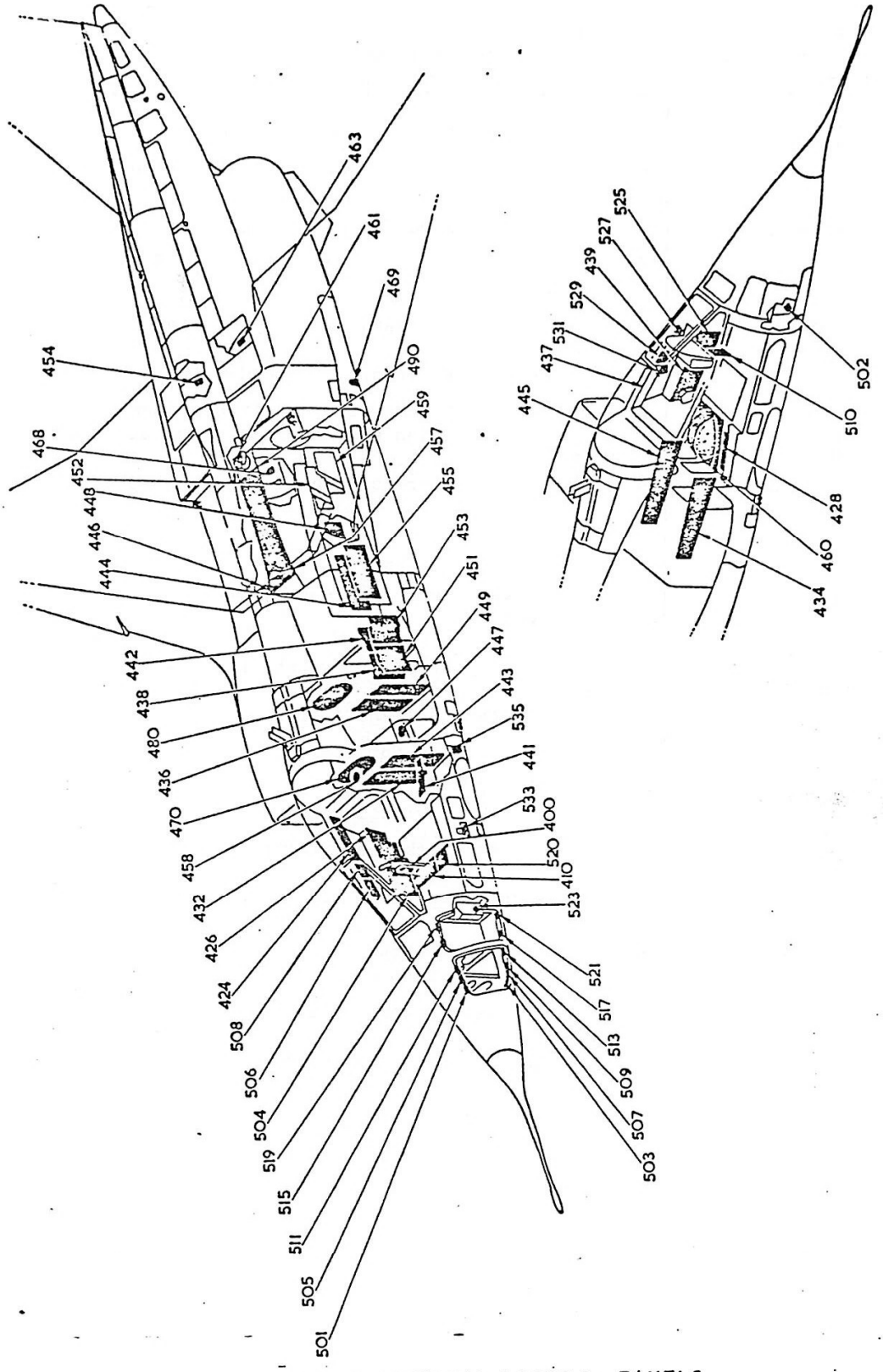

FIG. 5 INTERNAL DOORS & PANELS

INTERNAL DOORS AND PANELS - Table 5

Door/Panel No.	Fig.	Components or assemblies accessible
400	5	Access panel on control column
410	5	Control column gaiter
424	5	Rear housing - access to canopy mechanism (starboard)
426	5	Fairing, starboard console rear door
428	5	Frame of nose wheel fairing (starboard)
432	5	Access door, fuel collector tank No.2.on Frame 10
434	5	Bearer - access to fuel collector tank No.2. to fuel tank F1 (starboard)
436	5	Access door, fuel collector tank No.1. on Frame 15
437	5	Rear housing - access to canopy mechanism (port)
438	5	Front bearer - access to Zone 180 fuel lines (starboard)
439	5	Rear fairing, port console
441	5	Frame of nose wheel fairing (port)
442	5	Rear bearer - access to Zone 180 fuel lines (starboard)
443	5	Access door, fuel collector tank No.1 to Frame 1.
444	5	Forward door on bottom bearer - access to Zone 180 (starboard)
445	5	Bearer - access to fuel collector tank No.1. to fuel tank F1, (port)
446	5	Access: fuel level switch, fuel tank V2
447	5	Access: port side 'stop air' valve
448	5	Centre door on bottom bearer - access to Zone 180 (starboard)
449	5	Access door, fuel collector tank No.2. on Frame 15
451	5	Front bearer - access to Zone 180 fuel lines (port)
452	5	Rear door on bottom bearer - access to Zone 180 (starboard)
453	5	Rear bearer - access to Zone 180 fuel lines (port).

Table 5 (contd)

Door/Panel No.	Fig.	Components or assemblies accessible
454	5	Access: engine lifting point (starboard)
455	5	Forward door on bottom bearer, access to Zone 180 (port)
457	5	Access: fuel level switch, fuel tank F1
458	5	Access: starboard side 'stop air' valve
459	5	Rear door on bottom bearer - access to Zone 180 (port)
460	5	Nose wheel cap
461	5	Inspection door, spoilers mechanical unit.
463	5	Access: engine lifting point (port)
468	5	Access: starboard air brake jack.
469	5	Access: port air brake jack.
470	5	Top access door to fuel tank F1 on Frame 10
480	5	Top door, Frame 15 between fuel tanks F1 and F2.
490	5	Top door, fuel tank F3
501	5	Access: hinge pin (door 33)
502	5	Locking washer (access to nose undercarriage strut pin) (starboard)
503	5	Access. locking pin (door 33)
504	5	Front fairing, starboard console
505	5	Access: hinge pin (door 33)
506	5	Front housing - access to canopy mechanism
507	5	Access: locking mechanism bell-crank lever (door 33)
508	5	Central housing - access to canopy mechanism
509	5	Access: locking pin (door 33)
510	5	Opening front panel, console
511	5	Access: hinge pin (door 33)

Table 5 (contd)

Door/Panel No.	Fig.	Components or assemblies accessible.
513	5	Access: locking pin (door 33)
515	5	Access: hinge pin (door 35)
517	5	Access: locking pin (door 35)
519	5	Access: hinge pin (door 35)
520	5	Fairing, cross-member, base of control column
521	5	Access: locking pin (door 35)
523	5	Locking washer (access to nose undercarriage strut pin) (port)
525	5	Front fairing, port console
527	5	Front housing, access to canopy mechanism
529	5	Central housing
531	5	Ladder control box cover
533	5	Recess door (access to ladder Teleflex control for adjustment)
535	5	Access door to ladder external control box

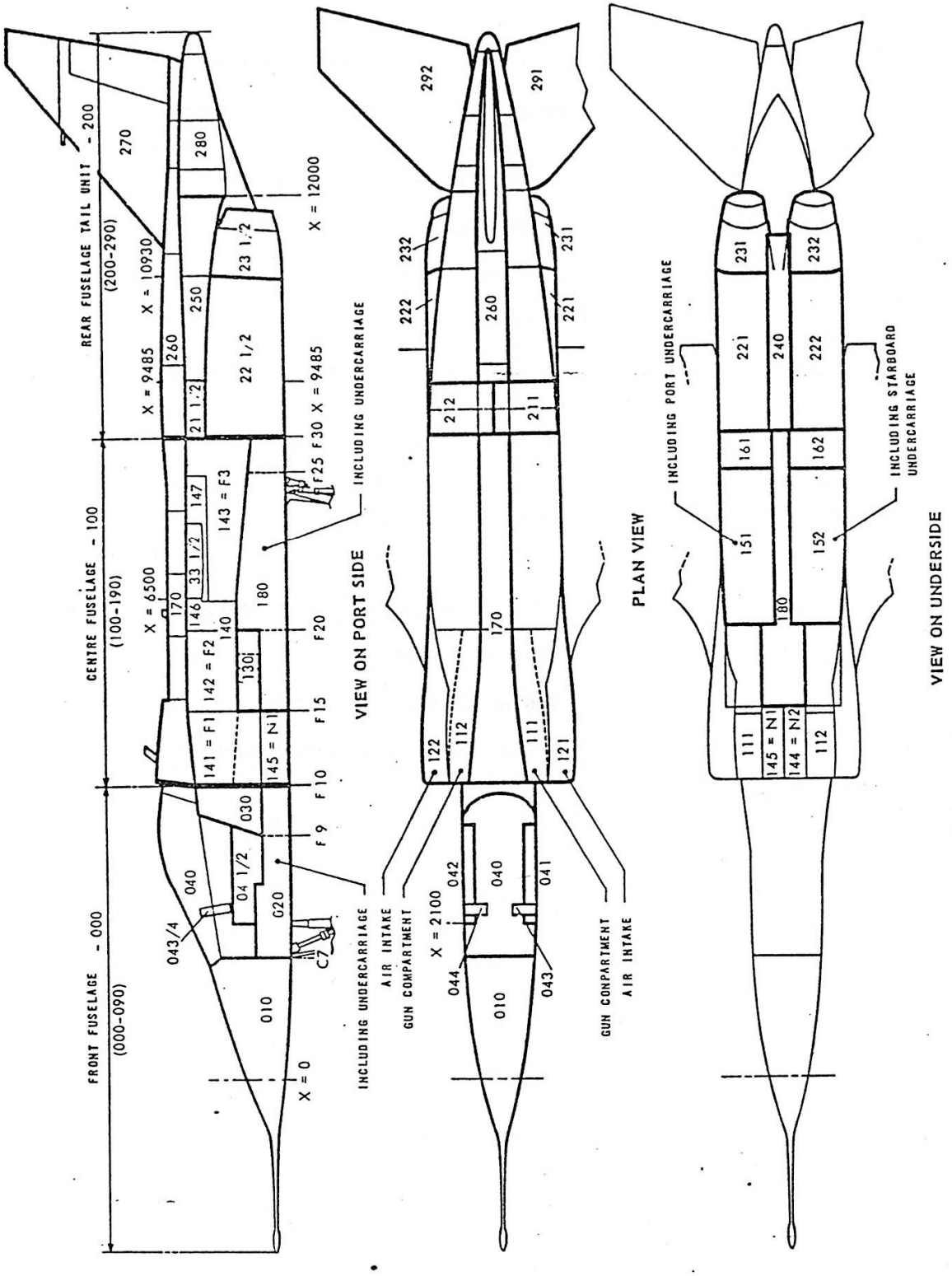

FIG.6 EQUIPMENT ZONES (FUSELAGE AND TAIL UNIT)

EQUIPMENT ZONES - FUSELAGE AND TAIL UNIT — TABLE 6.

Ref.	Fig.	Description.
010	6	Nose cone: from the nose to Frame 7
020	6	Nose undercarriage compartment, nose undercarriage and doors: Frame 7 to Frame 10
030	6	Equipment compartment: Frame 9 to Frame 10
040	6	Cockpit: Frame 7 to Frame 10
041	6	Port console: X 2 100 to Frame 9
042	6	Starboard console: X 2 100 to Frame 9
043	6	Port instrument panel
044	6	Starboard instrument panel
111	6	Port gun compartment: Frame 10 to Frame 20
112	6	Starboard gun compartment: Frame 10 to Frame 20
121	6	Por air intake: Frame 10 to Frame 15
122	6	Starboard air intake: Frame 10 to Frame 15
130	6	Equipment and ammunition compartments:Frame 15 to Frame 20
140	6	Fuel tanks and systems zones: centre fuselage: Frame 10 to Frame 30
141	6	Fuel tank F1: Frame 10 to Frame 15
142	6	Fuel tanks F2: Frame 15 to Frame 20
143	6	Fuel tank F3: X 6 500 to Frame 30
144	6	Starboard collector tank N2: Frame 10 to Frame 15
145	6	Port collector tank N1: Frame 10 to Frame 15
146	6	Fuel system equipment compartment: Frame 20 to X 6 500
147	6	Equipment compartment at rear of main plane: X7 500 to Frame 25
151	6	Port undercarriage compartment, undercarriage and doors: Frame 20 to Frame 25
152	6	Starboard undercarriage compartment, undercarriage and doors: Frame 20 to Frame 25.

Table 6 (contd)

Ref.	Fig,	Description.
161	6.	Port air brake and compartment: Frame 25 to Frame 30
162	6	Starboard air brake and compartment: Frame 25 to Frame 30
170	6	Centre fuselage spine zone: Frame 10 to Frame 30
180	6	Equipment compartment between the centre and rear fuselage: Frame 15 to Frame 30
211	6	Port upper equipment compartment: Frame 30 to X 9 485
212	6	Starboard upper equipment compartment: Frame 30 to X 9 485.
221	6	Port engine compartment (in front of the firewall) Frame 30 to X 10 930
222	6	Starboard engine compartment (in front of the firewall) Frame 30 to X 10 930
231	6	Port engine compartment (behind the firewall) X 10 930 to X 12 000
232	6	Starboard engine compartment (behind the firewall) X 10 930 to X 12 000
240	6	Rear fuselage keel unit: Frame 30 to X 12 000
250	6	Rear fuselage fuel tank F4: X 9 485 to X 12 000
260	6	Rear fuselage spine zone: Frame 30 to X 14 000
270	6	Fin and rudder
280	6	Tail unit, X 12 000 to X 14 150
291	6	Port tail plane
292	6	Starboard tail plane

EQUIPMENT ZONES - MAIN PLANE. - Table 7

Ref.	Fig.	Description.
311	7	Port leading edge
312	7	Starboard leading edge
321	7	Port slat
322	7	Starboard slat
331	7	Port fuel tank and torsion box
332	7	Starboard fuel tank and torsion box
341	7	Port trailing edge
342	7	Starboard trailing edge
351	7	Port spoiler
352	7	Starboard spoiler
361	7	Port inboard and outboard flaps
362	7	Starboard inboard and outboard flaps

MAINPLAIN UPPER SURFACE

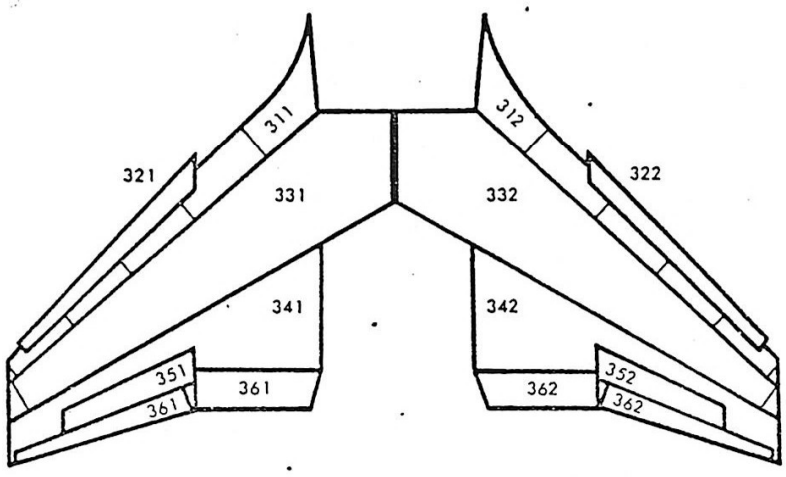

MAINPLANE LOWER SURFACE

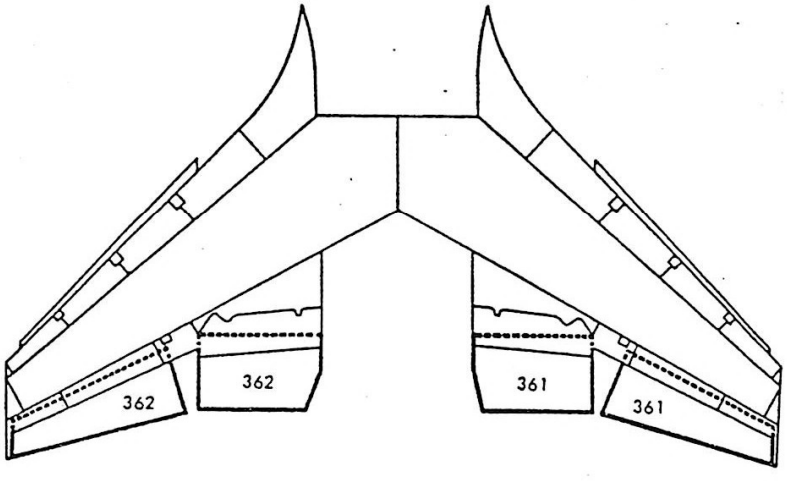

FIG.7 EQUIPMENT ZONES (MAINPLANE)

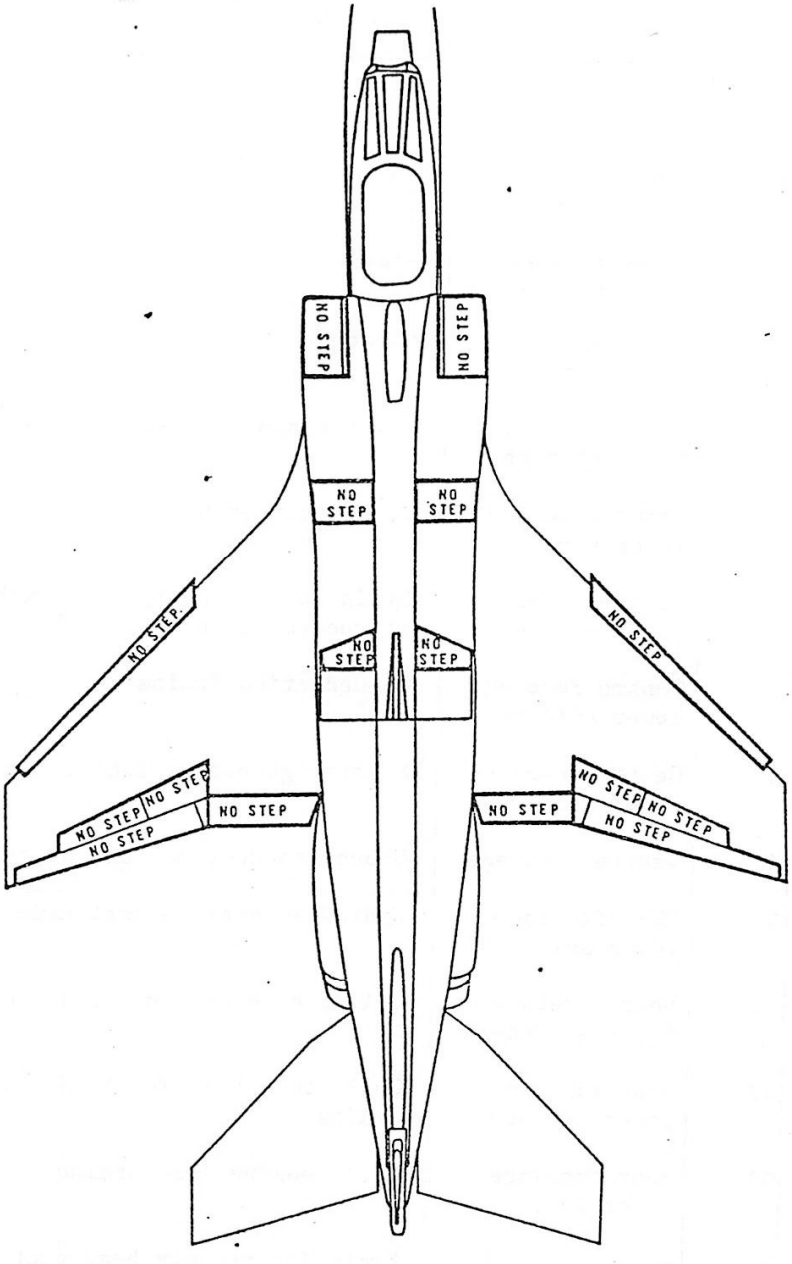

FIG.8 NO STEP ZONES

DRAIN AND BLEED POINTS - Table 8

Ref.	Access.	Description.
1	Front fuselage lower surface	Oxygen compartment drain
2	Front fuselage lower surface	Water drain from side box stucture
3	Front fuselage lower surface	Oxygen overflow drain
4	Front fuselage lower surface	Oxygen heat exchanger tank drain
5	Front fuselage lower surface	Water drain from side box structure
6	Front fuselage lower surface	Drain for secondary hcar exchanger zone
7	Centre fuselage upper surface	Drain for secondary heat exchanger in starboard spine
8	Centre fuselage lower surface	Condensation drains
9	Centre fuselage lower surface	Starter generator fuel drain
10	Centre fuselage	Ground connection fairing drain - port side
11	Rear fuselage lower surface	Hydraulic drain - port side
12	Rear fuselage lower surface	Collector drain for No.1. engine air drains
13	Rear fuselage lower surface	Collector drain for No.1. engine humidity drains
14	Rear fuselage lower surface	No.1. engine leak drains
15	Rear fuselage upper surface	Drain for primary heat exchanger in port spine
16	Rear fuselage lower surface	Collector drain for No.1. engine dry drains
17	Rear fuselage lower surface	No.1. engine speed control relay box breather drain

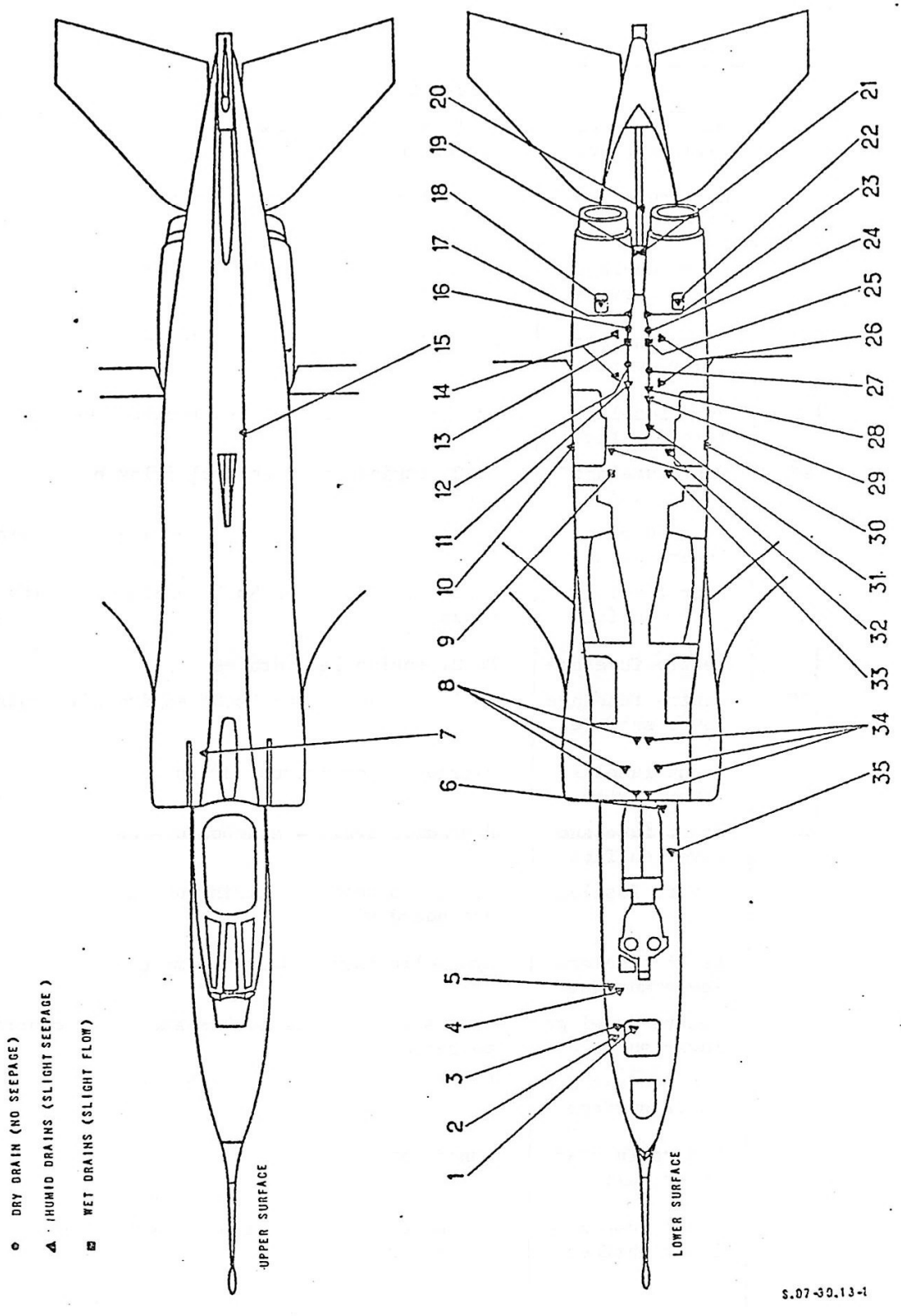

FIG. 9 DRAIN AND BLEED POINTS

Table 8 (contd)

Ref.	Access.	Description.
18	Rear fuselage lower surface	No.1.engine oil pressure replenishment access door drain
19	Rear fuselage lower surface	F4 fuel tank compartment drain
20	Rear fuselage lower surface	Rear compartment drain on starboard side of keel
21	Rear fuselage lower surface	F4 fuel tank compartment drain
22	Rear fuselage lower surface	No.2 engine oil pressure replenishment access door drain
23	Rear fuselage lower surface	No.2. engine speed control relay box breather drain
24	Rear fuselage lower surface	Collector drain for No.2. engine dry drains
25	Rear fuselage lower surface	Collector drain for No.2. engine humidity drains
26	Centre fuselage	No.2. engine leak drains
27	Centre fuselage lower surface	Collector drain for No.2. engine air drains
28	Front fuselage lower surface	Hydraulic compartment drain
29	Front fuselage lower surface	Hydraulic drain - starboard side
30	Centre fuselage	Ground connection fairing drain - starboard side
31	Front fuselage lower surface	Hydraulic engine-driven pump drain
32	Centre fuselage lower surface	Drains for the air brakes and lower central compartments
33	Centre fuselage lower surface	Starter generator oil tank drain
34	Centre fuselage lower surface	Condensation drains
35	Front fuselage lower surface	Drain for air conditioning system water extractor

EXTERNAL MARKINGS & SERVICING POINT IDENTIFICATION - Table 9

Description.	Symbol.	Colour.	Fig.	Ref.
Fuel				
Pressure refuelling and draining point	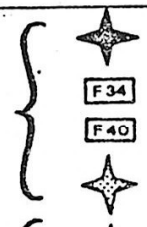	Black	11	18
		Yellow		
Gravity refuelling point and Filler cap locking indication	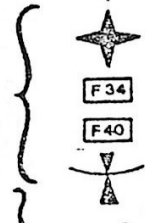	Black	9a	5
		Red		
Refuelling earthing point Earth connection receptacle		Black	11 12	17 12
Water drains, fuel tank F1	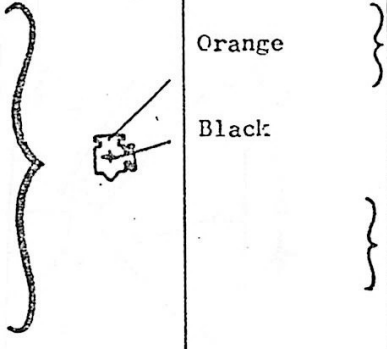	Orange	12	3
Water drains, fuel tank F2 (in main undercarriage compartment)		Black	10	10
Water drains, fuel tank F3				
Water drains, fuel tank F4				
Water drain, fuel tank V1				
Water drain, fuel tank V2			12	3
Water drains, collector tanks N1-N2				
Lubricant				
No.1 engine replenishment	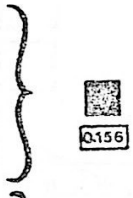	Black	12	2
No.1 engine draining				
No 2 engine replenishment				
No 2 engine draining				
Starting system replenishment				
Starting system draining		Black		
A.C.generator replenishment			11	16
		Black	12	14

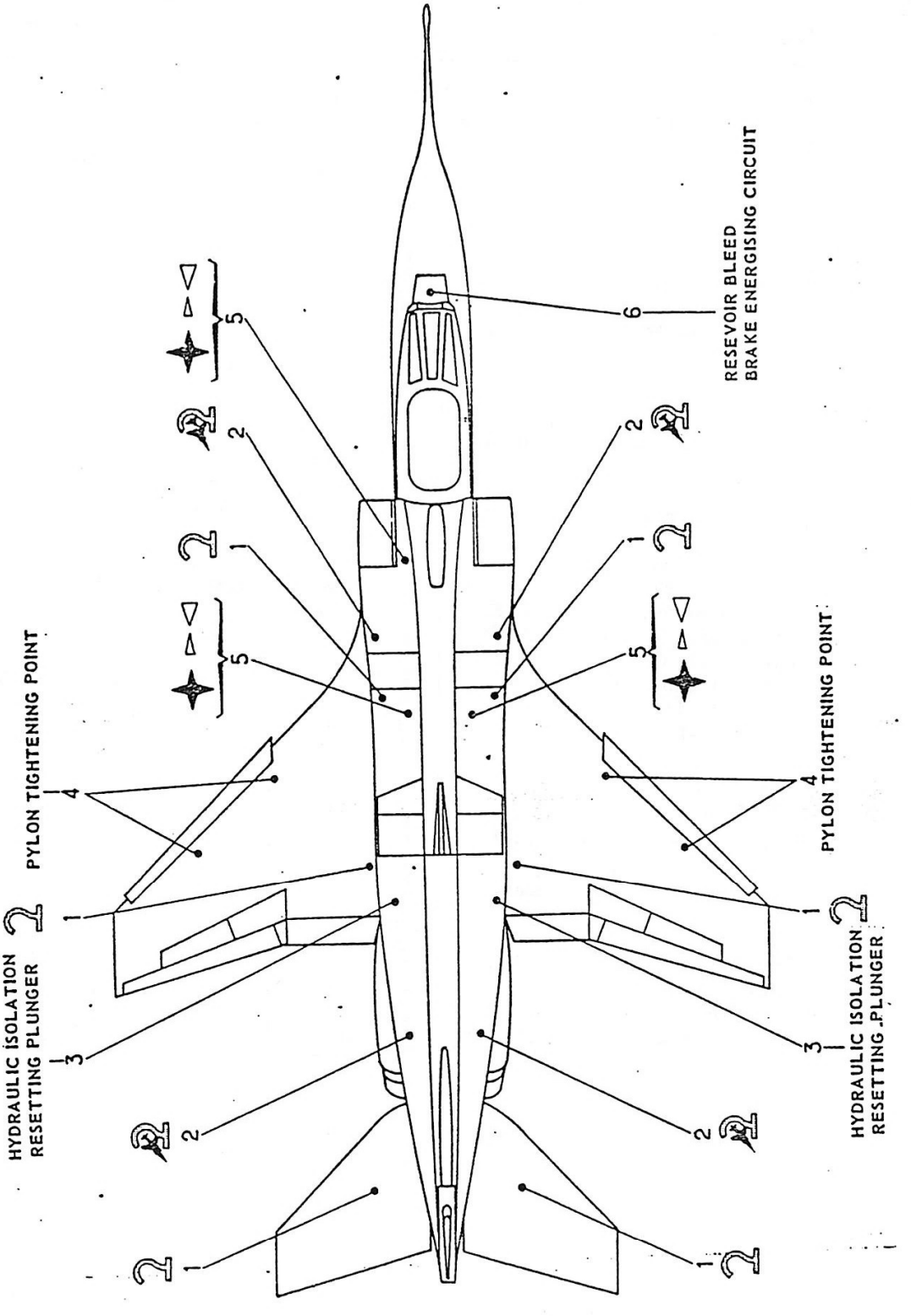

FIG.9A UPPER SURFACE SERVING POINTS

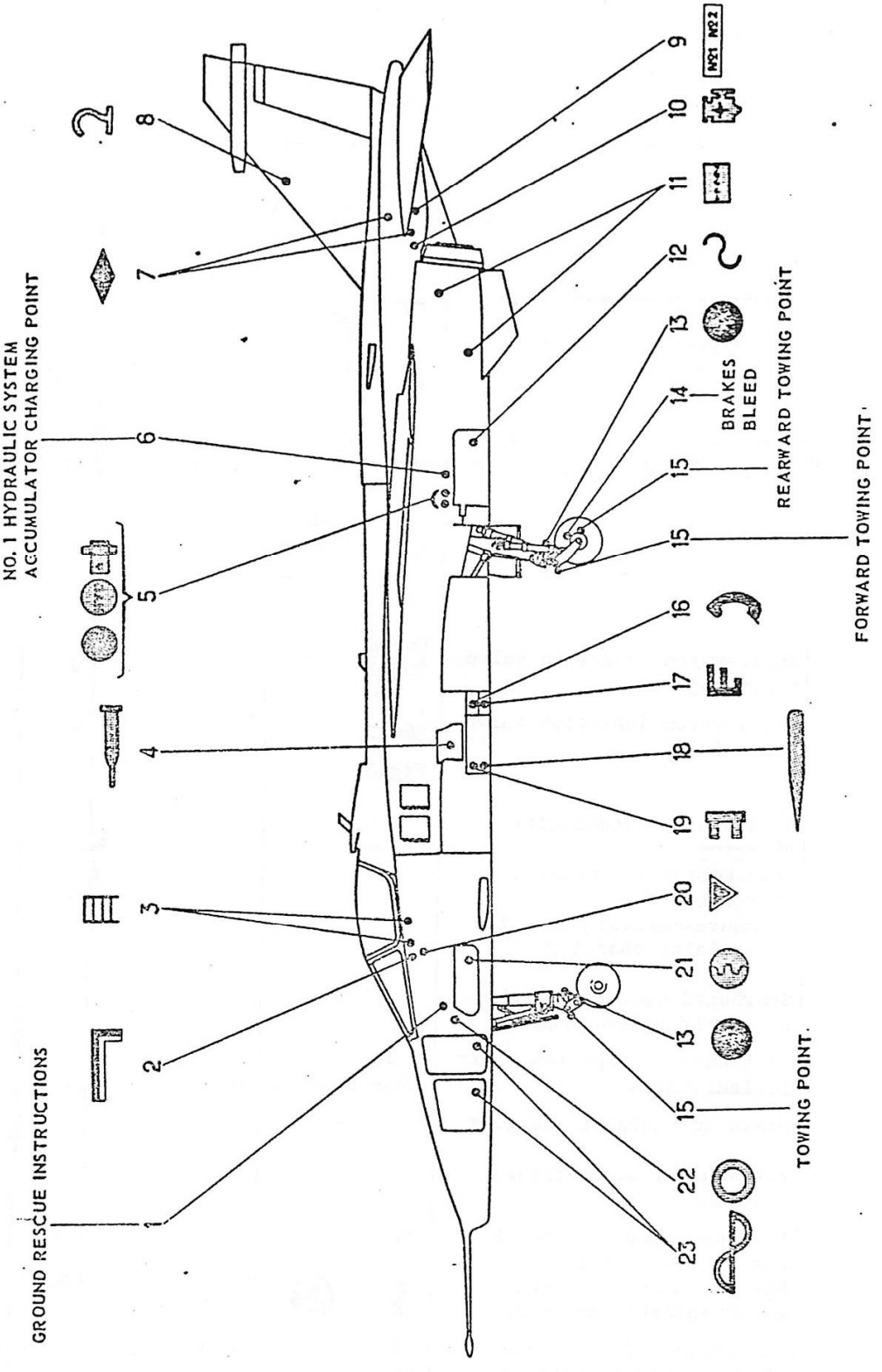

FIG. 10 SERVICING POINTS–PORT SIDE

Table 9 (contd)

Description	Symbol	Colour	Fig	Ref
Oxygen				
Liquid oxygen installation		Black on white	11	8
Hydraulic - Undercarriage				
No.1.system replenishment No.1.system draining No.1.system testing	H 515	Black		
No.2.system replenishment No.2.system draining . No.2.system testing	HYD	Black on yellow	10 11	5 4
		Orange Black		
No.1.system isolation valve resetting	Doors 205-1		9	3
No.2.system isolation valve resetting	206-1 Fig.3.		10	6
No.1 system accumulator charging No.2.system accumulator charging Pressure-maintaining valve accumulator charging			11	3
Starboard emergency brake reservoir replenishment				10
Port normal brake reservoir replenishment	In nose undercarriage		12	
Brake accumulator charging				11
Anti-shimmy accumulator charging				
Nose undercarriage shock absorber charging			10	13
Port main undercarriage shock absorber charging			10	13
Stbd.main undercarriage shock absorber charging		Black	11	15

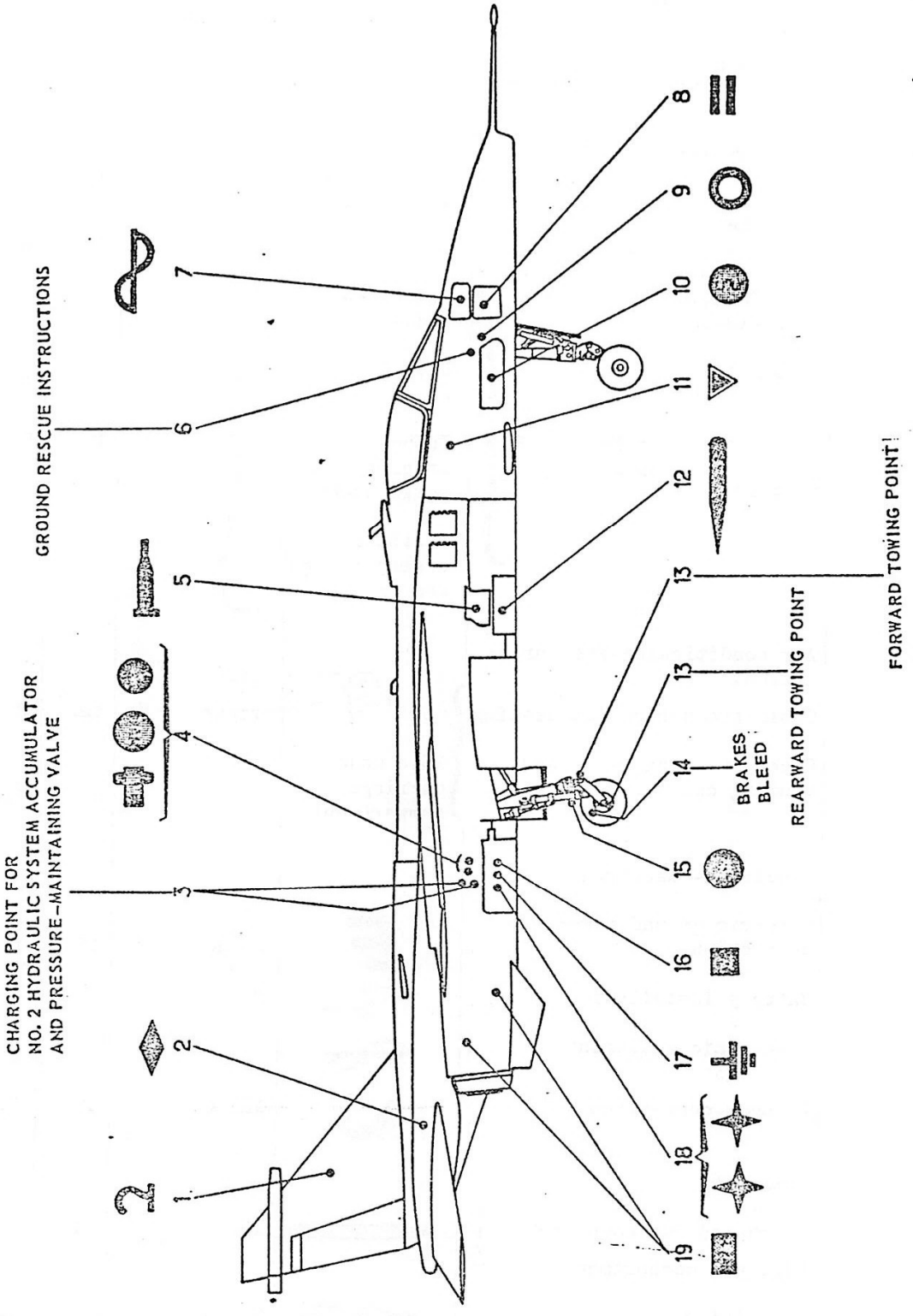

FIG.11 SERVICING POINTS-STARBOARD SIDE

Table 9 (contd)

Description.	Symbol.	Colour.	Fig.	Ref.
Pitot static				
Fuselage static vents S4-S5-S6 - port side		Black	10	21
Fuselage static vents S4-S5-S6 - starboard side		Orange	11	10
Pitot/static drain traps S2-T4-T2-T3	Door 43-2 Fig.4.			
Pitot/static drain traps S4-T1-S1-S6-S5	Door 60-2 Fig.4.			
Pitot/static drain trap S6	In nose undercarriage compartment		12	6
Pitot/static drain traps S4-S5-T3	Starboard main undercarriage compartment			
Air conditioning-Pressurization.		Black		
Cabin pressurization testing		Orange	12	9
Canopy seal charging and venting connection	Nose undercarriage compartment		12	13
Electric - Electronic				
Electric ground power connection		Black	10	17
Battery installation		Orange	12	8
Electronic equipment installation		Orange	10-11	23-7
Telecom.connection		Black	10	16
Armament				
Starboard gun compartment		Green	11	12
Port gun compartment			10	18
Ammunition box		Green	10-11	4-5

Table 9 (contd)

Description.	Symbol	Colour	Fig	Ref
Armament (contd)				
Link collector box		Green	12	7
Ground safety override switch		Green	10	19
Pylon tightening points, starboard main plane upper surface			9(a)	4
Pylon forward attachment points under starboard main plane				
Pylon rear attachment points under starboard main plane			12	5
Pylon tightening points, port main plane lower surface			9(a)	4
Pylon forward attachment points under port main plane				
Pylon rear attachment points under port main plane			12	5
Safety				
Ejection seat		Red	10-11	20-11
Ground rescue instructions		Black on Yellow	10-11	1-6
Canopy emergency ground jettison	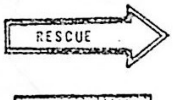	Black on Yellow		
Canopy external opening handle	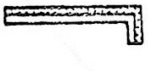	Red on Yellow	10	2
Ladder attachment points		Red on White	10	3

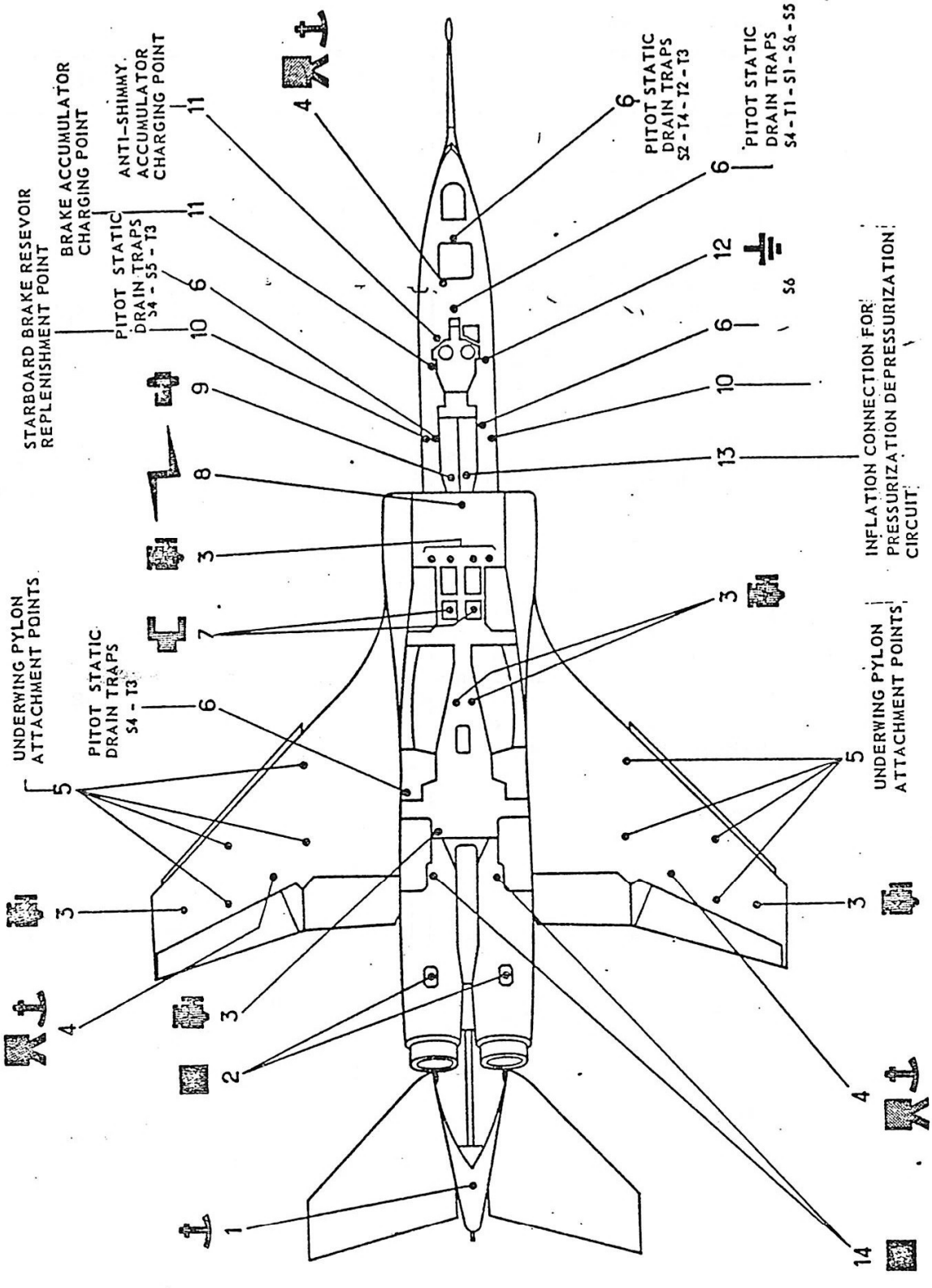

FIG.12 LOWER SURFACE SERVING POINTS

Table 9 (contd)

Description.	Symbol.	Colour.	Fig.	Ref.
Safety (contd)				
Air generator motor exhaust				
No.1.& No.2.engine fire extinguisher fuzed indicators		Red on white	10 10	12 9
Engine fire extinguisher system location and Extinguisher pressure relief indicator		Black on White	10-11	7-2
Ground engine fire extinction doors	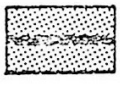	Red	10-11	11-19
Handling				
Towing point on nose under carriage			10	15
Hauling points		Orange	10-11	22-9
Soft ground recovery point on front of main undercarriage			10-11	15-13
Soft ground recovery point on rear of main undercarriage			10-11	15-13
Forward jacking points under the fuselage Forward picketing points under the fuselage Jacking points under the main plane Picketing points under the main plane	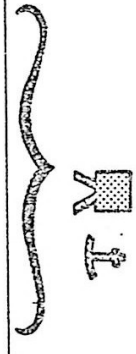	Orange	12	4
Rear picketing point under the fuselage		Orange	12	1

Table 9 (contd)

Description.	Symbol.	Colour.	Fig.	Ref.
Forward slinging points (aircraft and centre fuselage) Rear slinging points (aircraft and centre fuselage)		Yellow and black on white	9(a)	2
Forward slinging points (main plane)	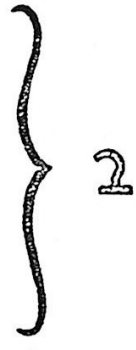	Orange	9	1
Rear slinging points (main plane and centre fuselage)				
Tail plane slinging points				
Fin slinging points			10-11	8-1

CHAPTER. 3.

STRUCTURES

CHAPTER. 3.

STRUCTURE

MAIN ASSEMBLIES.

CONTENTS.

1 - 5. FUSELAGE GENERAL.

6. MAINPLANES.

SUB ASSEMBLIES.

2. FRONT FUSELAGE.

3. CENTRE FUSELAGE.

4. REAR FUSELAGE.

CHAPTER. 3.

FUSELAGE GENERAL.

CONTENTS.

1.1.	INTRODUCTION.
1.2.	DESCRIPTION.
1.3.	FRAMES.
2.	FRONT FUSELAGE.
2.1.	DESCRIPTION.
2.1.1.	MOVING PARTS.
2.1.2.	ACCESS PANELS.
3.	CENTRE FUSELAGE.
3.1.	ZONES.
3.2.	MAIN FRAMES.
4.	REAR FUSELAGE.
4.1.	SUB ASSEMBLIES.
4.2.	REMOVABLE PARTS.
5.	FUSELAGE IDENTIFICATION.
5.1.	FRAMES NUMBERING.
5.2.	STATION NUMBERING.
5.3.	FUSELAGE DEPTH. (H.F.D).

ILLUSTRATIONS.

FIG. 1.	AIRCRAFT BREAKDOWN.
FIG. 2.	FRAME AND STATION POINTS.

1. FUSELAGE GENERAL.

1.1. Introduction.

The all metal fuselage is built in three parts:-

Front Fuselage.

Centre Fuselage.

Rear Fuselage.

The nose and centre fuselages manufactured by BREGUET are assembled separately in jig form and are joined together at Frame 10 in a marry up jig by 12 bolts, washers and nuts.

The rear fuselage manufactured by B.A.C. is assembled also in jig form before being released for final assembly in a marry up jig, and is joined together at frame 30 by 151 bolts, washers and nuts of various sizes. Incorporating removable part frames.

1.2. Description.

The structure of the fuselage is composite, using both traditional and honeycomb (NIDA) construction.

The use of L73 material and procedures is general in the fabrication of the fuselage, for secondary structures and formed members L72 material and procedures have been used.

Other light alloy materials in use are L70 and L71 which are unclad material.

1.3. Frames.

Frames are distributed over the entire length of the fuselage which are numbered 0 - 42.

The front fuselage is contained between frames 0 - 10 with the pressurized cabin between frames 8 - 9. The centre fuselage stretches from frames 10 - 30 and the rear fuselage between frames 30 - 42.

The various frames are joined together by Stringers - Bearers - Flooring and Skin.

2. FRONT FUSELAGE.

2.1. Description.

The nose fuselage houses the nose undercarriage assembly and frame 10 carries the connections between the nose and centre fuselage section.

Attached to Frame 5 Top and Bottom are the two front section lifting and jacking adaptor fittings, which are blanked off by plug

2.1. (contd)

panels, when not in use.

Port and Starboard forward towing adaptor fittings are situated on Frame 8 and can be utilised when no other facilities for forward towing exist.

Provision is made on the Port side of the fuselage for a ladder and stowage, which retracts manually and locks in the housed position.

2.1.1. Moving Parts.

The moving parts of the front fuselage consists of:-

Nose Undercarriage and Fairings.

Nose Undercarriage Door Assemblies.

Canopy.

Flight Refuelling Probe.

2.1.2. Access Panels.

Hinged or removable panels are provided in the skin for access to equipments, bays and compartments.

3. CENTRE FUSELAGE.

3.1. Sections.

The centre fuselage is made up of three separate sections:

Frame 10 - 20.

A section which includes F1 and F2 fuel tanks and two collector tanks, also housed are the cartridge box components and gun housings.

Frame 20 - 25.

The centre box structure, in which is housed F3 fuel tank, supports the main undercarriage and mainplanes.

3.1. (contd)

Frame 25 - 30

Includes the rear box structure in which is housed F3 fuel tank and which supports the airbrakes and their operating mechanisms.

3.2. Main Frames.

The Centre Fuselage five main frames are:-

10, 15, 20, - Each of composite construction.(Not simple construction).

25, 30. - Each of conventional construction.

Intermediate frames are simply constructed of light alloys.

Frame 10:

Provides the attachment of the centre fuselage to the nose fuselage and contains the access panels to the fuel tank F1 and the two collector tanks.

Frame 15:

Provides the attachment for the top and bottom arms of the two air intake duct structures. The two top arms are each connected to the frame by two bolts whilst the bottom arms are riveted.

Three access panels to fuel tank F1 and the two collector tanks, similar to those in Frame 10, are made in this frame.

Frame 20:

Constructed in FOUR separate sections joined by rivets and bolts. At the bottom it has a spacer fitting used for attaching the pylon mounting.

Frame 25:

Comprises of FIVE separate sections joined together, in particular two side fittings in which are machined the central attachments for:-

Mainplanes.

Main Undercarriage.

Airbrakes.

Frame 30:

Joins the rear fuselage to the centre fuselage by multiple bolts and connections. Two rear attachment fittings for the mainplanes are fastened symmetrically to the top of the frame whilst the two hinges for the Airbrake operating jacks are machined at the bottom.

NOTE:
Intermediate Frames 11 - 20 serve as internal structure for fuel tanks F1 and F2.

4. REAR FUSELAGE.

The rear fuselage carries the dorsal fin, tailplane, rudder and accommodates both propulsion units in bays either side of the Keel. The bays are enclosed by engine bay doors to which is fitted a strake, this increases the stability of the aircraft in certain conditions of flight.

The rear fuselage is made up of main and sub-frames from Frames 30 - 42. Frames 30 - 32 forms the rear equipment bay, Frames 32 -37 forms the integral fuel tank, F4. Aft of frame 37 to 42 are housed the fin, brake parachute assembly, the tailplane, rudder and their associated hydraulic jacks.

4.1. Sub Assemblies.

For descriptive purpose, the rear fuselage is divided into three major sub-assemblies referred to as:-

Upper fuselage.

Keel.

Tail Section.

4.1.1. Upper Fuselage.

The upper fuselage extends from Frame 30 to 37, the base of the assembly forming the engine bays roof, its transverse shape is formed by a series of formers and diaphragms intersected by longitudinal stringers, the whole structure is covered by a pre-shaped skin.

The enclosure formed by the engine bays roof and outer skins constitutes F4 fuel tank. Fuel leakage is prevented by sealing methods of P.R.C. during manufacture internally and Bostik Sealing externally.

Titanium insulating blankets are fitted to the roof of both engine bays to protect the fuselage compartments from heat generated by the propulsion units.

4.1.2. Keel.

The Keel is of inverted 'Y' section and extends from Frames 30 to 36 along the aircraft centre line beneath the upper fuselage forming a division between the two engine bays the assembly is of light alloy and titanium construction, double skinned. The outer skin being of corrugated section to give increased rigidity.

4.1.3. Tail Section.

The tail section extends from Frame 37 - 42 and is constructed from transverse frames, diaphragms and longitudinal stringers covered by pre-shaped skin.

Reinforced areas provide anchorage for the Fin attachment brackets and tailplane hinge shaft housings.

The area between Frame 39 - 42 houses the brake parachute container,

Either side of the rear fuselage between Frames 38 and 39 are mounted tailplane spigot housings, cylindrical in shape and stepped. The small DIA being located INBOARD. Each housing accommodates TWO bearings, an inner bearing which is of the spherical type P.T.F.E. lined. The outer bearings is of the needle roller type.

The inner race of the outboard bearing is fitted to the tailplane spigot and the outer race including rollers is fitted to the bearing housing. Both races being interference fit, are locked in position by washers and special nuts.

4.2. Removable Parts.

4.2.1. Engine Bay Doors.

The engine bay doors are constructed from frames, longitudinal members, stringers and diaphragms the whole assembly being enclosed by an inner and outer skin, which hinges outwards and upwards. The bay doors can be held open at either 40°, 60° or 80° by a telescopic strut, attaching to the bay door alternate position holes and main-plane location point. To enable the engine bay doors to open the mainplane flaps must be HOUSED and airbrake OPEN.

The engine bay doors are locked closed by multiple fasteners.

4.2.2. Spine.

The spine of the aircraft runs along the upper surface of the fuselage and is used to house flying control, brake parachute and arrestor hook controls; also numerous air conditioning and fuel system components. The spine is constructed of light alloy frames, stiffeners and pre-shaped skin, and is divided into sections for ease of maintenance.

The assembly is attached to the A/C by screws, locating in longitudinal angles integral with the rear fuselage. The complete assembly being covered with easy removable access panels.

5. FUSELAGE IDENTIFICATION.

Fuselage identification in the longitudinal axis is by either, FRAME or STATION numbering.

5.1. Frame Numbering.

Frames are numbered from the front of the fuselage to the rear, from 0 to 42. Frame 0 being just aft of the Pitot Head and Frame 42 being the securing frame for the Brake Parachute. Main Locations can be easily identified by calculating from known main frames or fuselage section joint. FRAME 10 and 30.

5.2. Station Numbering.

Station numbers are dimensions calculated in millimetres from a known point on the fuselage. Each FRAME has a corresponding STATION number.

Station numbering is taken from a point known as the ORIGINAL 'X' AXIS which is situated on the Nose Section of the fuselage, identified by a cruciform headed screw on the PORT and STARBOARD side of the nose section.

Measurements forward of the ORIGINAL 'X' AXIS are given a NEGATIVE number whereas all measurements aft of this position are given a POSITIVE number,

i.e. - 215 is 215 m.m. forward of the 'X' AXIS

215 is 215 m.m. aft of the 'X' AXIS.

5.3. Fuselage Depth.

Identification of Fuselage depth is calculated from a known position within its diameter, once again in millimetres. The measurements are taken from a line which runs the length of the fuselage known as the HORIZONTAL FUSELAGE DATUM LINE or the ORIGINAL 'Z' AXIS.

Note:

THE HORIZONTAL FUSELAGE DATUM line is calculated from the HARMONISATION POINTS at FRAME 7 (Station 1649) and Frame 9 (Station 3300) and runs parallel to a line drawn between the Harmonization Points at a distance of 335 mm above it.

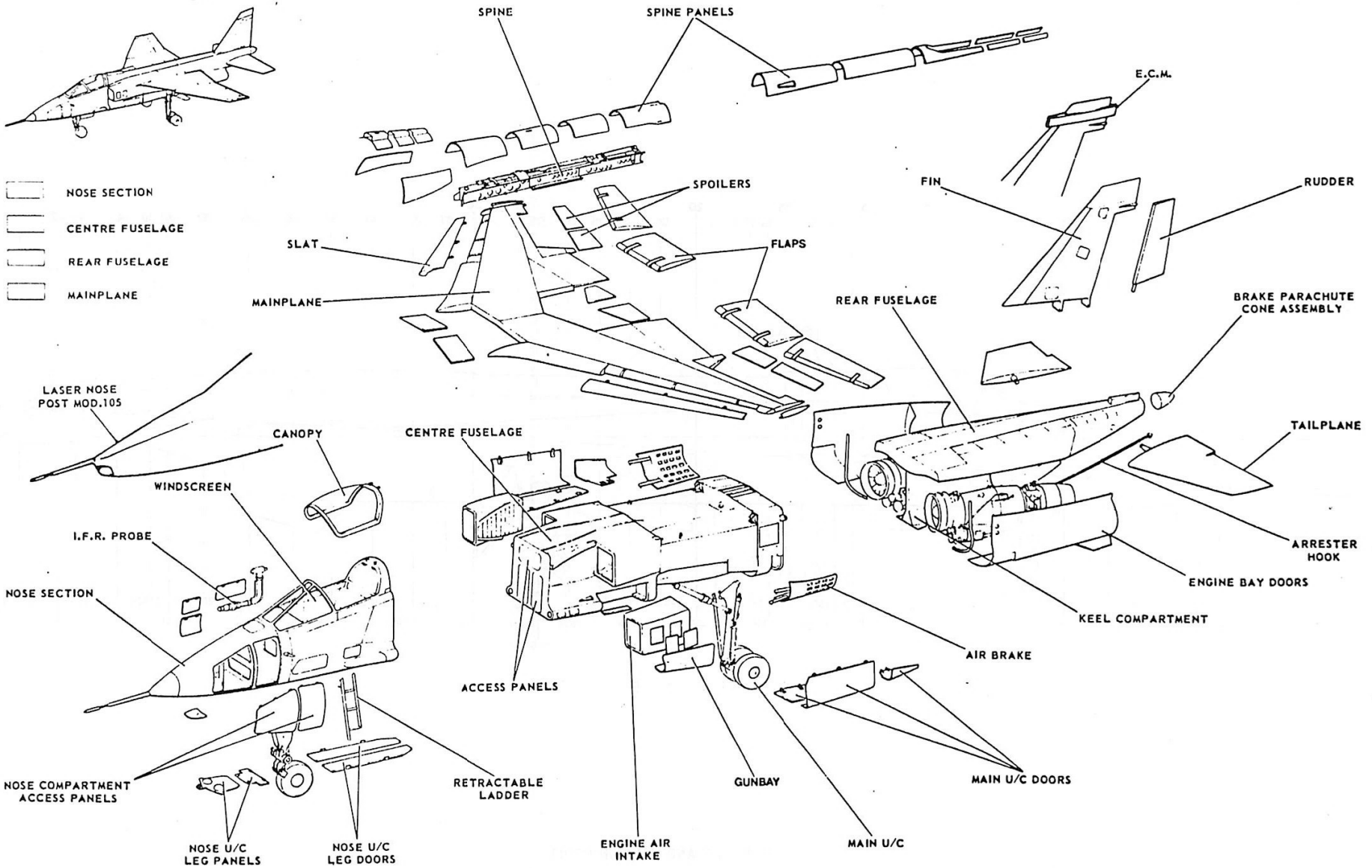

FIG.1 AIRCRAFT BREAKDOWN

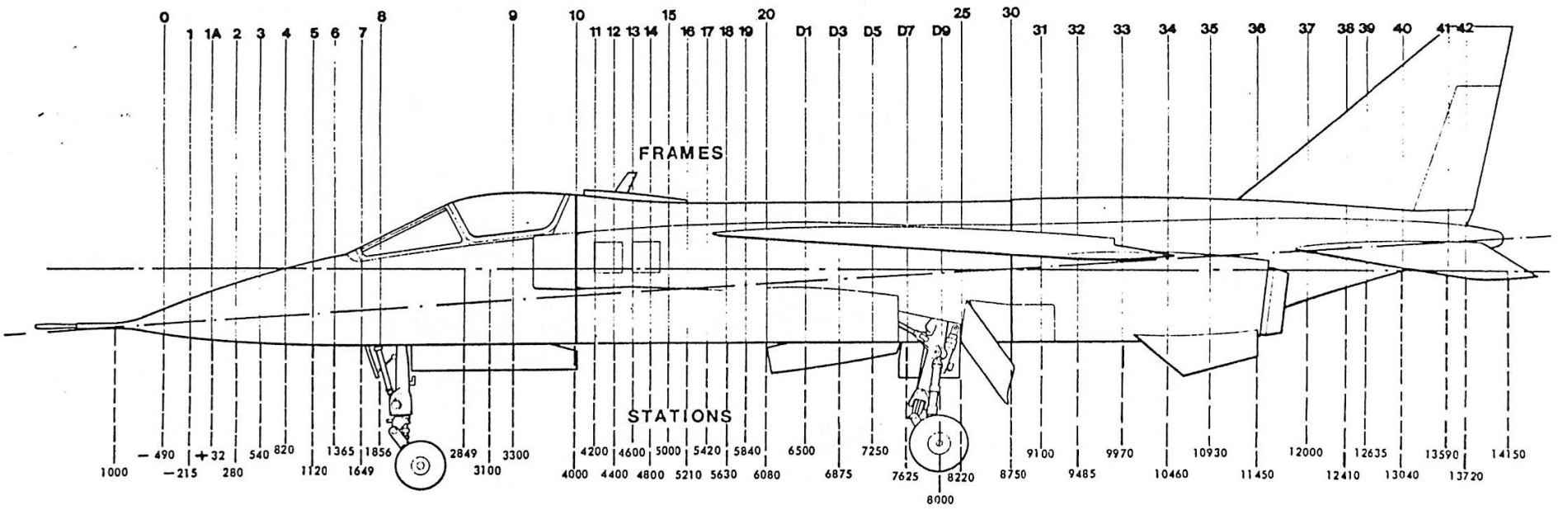

FIG.2 FRAME AND STATION POINTS

CHAPTER. 3.

STRUCTURES.

SUB.ASSEMBLY.

CONTENTS.

2. FRONT FUSELAGE.
2.1. INTRODUCTION.
2.2. DESCRIPTION.
2.2.1. FIXED ASSEMBLIES.
2.2.2. FRAMES.
2.2.3. FRONT ASSEMBLY.
2.2.4. COCKPIT.
2.2.5. NOSE UNDERCARRIAGE COMPARTMENT.

2.3. COCKPIT ACCESS SYSTEM.

ILLUSTRATIONS.

FIG.3. FRONT FUSELAGE STRUCTURE.
FIG.4. ACCESS TO COCKPIT.

1 NOSE CONE
2 TELEPHONE J.B. MOUNTING
3 FRONT COMPARTMENT- LOWER MULTIPLE MOUNTING PLATFORM
4 FRONT COMPARTMENT- UPPER MULTIPLE MOUNTING PLATFORM
5 HOISTING FITTING
6 VENTILATION EQUIPMENT ACCESS DOOR
7 REFUELLING PROBE COMPARTMENT LOWER DOOR
8 OXYGEN COMPARTMENT DOOR
9 CONVERTER COMPARTMENT DOOR
10 STARBOARD EQUIPMENT BAY DOOR
11 FLIGHT REFUELLING PROBE FAIRING
12 UPPER COMPARTMENT DOOR
13 SIGHT MOUNTING
14 INSTRUMENT PANEL
15 WINDSCREEN
16 COCKPIT
17 TRANSVERSE BOX STRUCTURE
18 CANOPY
19 STARBOARD SIDE MOUNTING
20 NOSE WHEEL FAIRING ASSEMBLY
21 PORT SIDE MOUNTING
22 LADDER HOISTING ASSEMBLY
23 FLYING CONTROLS ACCESS DOOR
24 GUN FAIRING
25 NOSE UNDERCARRIAGE DOORS
26 COCKPIT ACCESS STEPS
27 PORT EQUIPMENT BAY DOOR
28 COCKPIT ACCESS LADDER
29 NOSE UNDERCARRIAGE REAR COVER PLATE
30 NOSE UNDERCARRIAGE AUXILIARY DOORS
31 NOSE UNDERCARRIAGE FORWARD COVER PLATE
32 REAR COMPARTMENT- UPPER MULTIPLE MOUNTING PLATFORM
33 REAR COMPARTMENT- CENTRAL MULTIPLE MOUNTING PLATFORM
34 PORT REAR DOOR
35 REAR COMPARTMENT- LOWER MULTIPLE MOUNTING PLATFORM
36 PORT FRONT DOOR
37 LOWER DOOR
38 INCIDENCE PROBE DOOR
39 PANORAMIC CAMERA COMPARTMENT DOOR

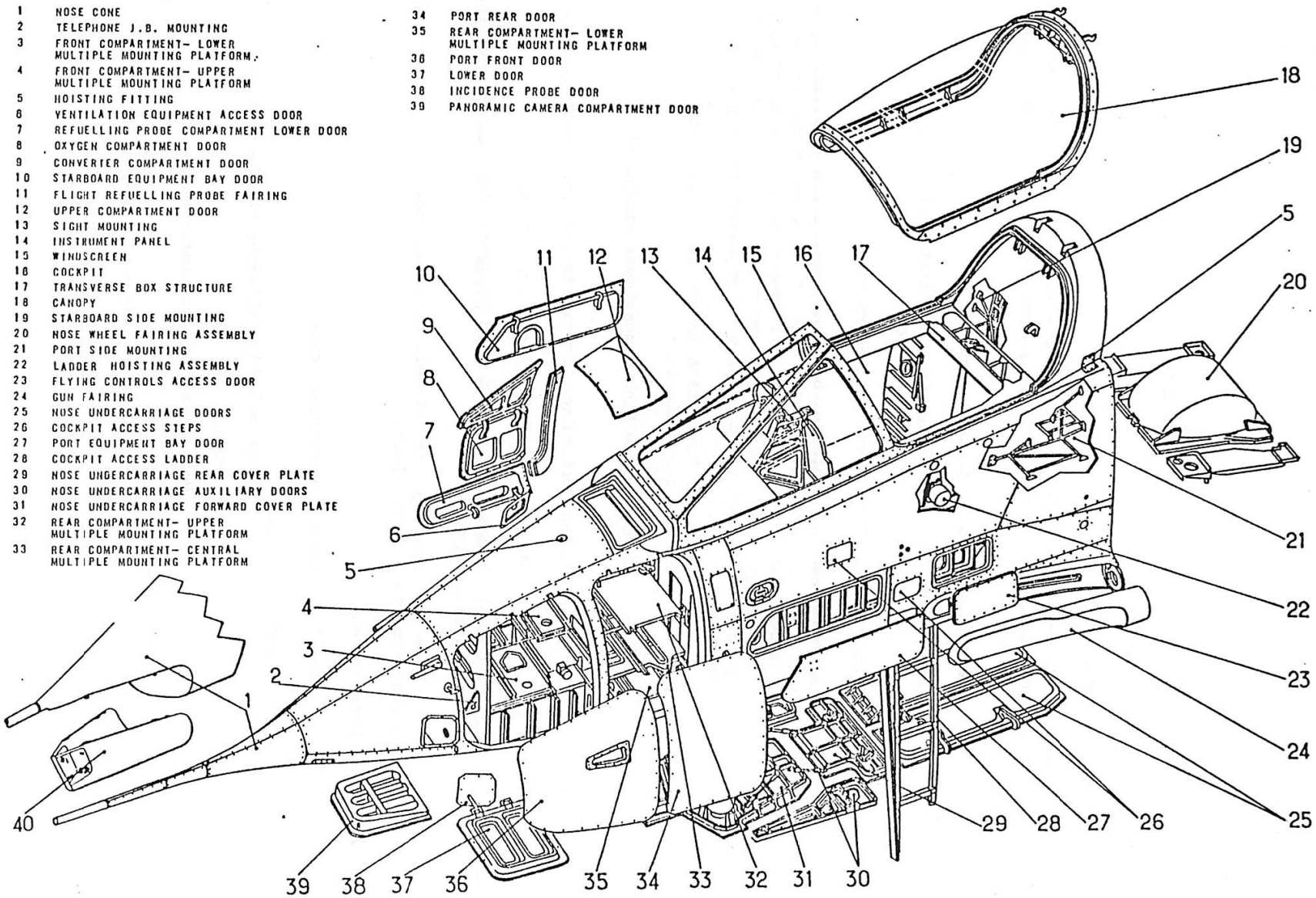

FIG.3 FRONT FUSELAGE STRUCTURE

CHAPTER 3.
FRONT FUSELAGE.

2. FRONT FUSELAGE.

2.1. Introduction.

The front fuselage, from Frame 0 - 10, is of composite construction, comprising honeycomb sandwich panels (NIDA) and a conventional structure.

From front to rear it comprises:-

Laser Nose Cone, which carries the pitot/static head (Frame 0 to 2)

Flight re-fuelling probe (Starboard side)

A front assembly contained between Frames 2 and 8, formed by a conventially structured hull. The front assembly is air conditioned, but not pressurised. It houses various items of operational equipment, mounted in compartments to which access is obtained via quick opening doors. The equipment in particular includes:-

Radio and Navigation equipment in the port forward compartments.

Liquid Oxygen Pack compartment starboard side.

Radio Interface compartment Starboard side.

Navigational Radar Aerial, underside.

A Cockpit between Frames 8 & 9 is pressurised and has an opening, jettisonable canopy.

Nose Undercarriage compartment, contained between Frames 8 & 10, and underneath Cockpit Floor.

2.2. Description.

The front fuselage comprises of:-

Fixed assemblies.

Front assembly including the lasar nose.

Cockpit.

Nose undercarriage compartment.

Moving parts:-

Nose undercarriage doors and two nose leg fairings.

2.2. (contd)

Canopy, and a retractable access ladder.

Flight refuelling probe mechanism and door.

Detachable Parts:-

Fuselage Doors.

Nose undercarriage auxiliary doors.

Guns fairings.

Battery hoisting assembly.

Windscreen.

Equipment-mounting frames.

2.2.1. Fixed Assemblies.

The structural assembly comprises of, the Frames, Bearers, Floors, Stringers, and Skins, according to the general stresses and local loading.

2.2.2. Frames.

The front fuselage comprises frames numbered from 0 to 9 (including a Frame 1 and 1A) and a false frame 10, which is made of two identical sections, one on each side. All the frames are made of light-alloy (A-U4G1) except for Frame 9, the centre web of which is made of honeycomb panel and the side sections of light-alloy.

Frames 0 to 2 form the Laser nose section.

Frame 5 carries the front lifting fitting at the bottom, to starboard, and the hoisting fitting at the top over the aircraft centre line.

Frame 7 has a solid web and carries the connection between the nose and the front fuselage. The connection is made in the first place by four lower fittings, picked up and bolted on the side bearers and the nose undercarriage strut attachment fittings, and secondly, by two top fittings picked up on two corresponding fittings on the front fuselage.

Frame 8 marks the limit of the cockpit; it has fittings for the nose undercarriage strut.

The sloping Frame 9 marks the rear limit of the cockpit, and the pressurised zone, it has fittings for the ejection seat and is reinforced at the sides by milled sections.

2.2.2. (contd)

The false Frame 10, made up of two milled side sections, serves as a pick-up for the centre fuselage.

2.2.3. Front Assembly.

The front assembly lies between Frames 0 and 7 and is formed of a conventionally structured hull with openings to provide the necessary access to the equipment housed inside.

Frames 0 to 6 are manufactured of pressed sheet metal. The skins are sheet metal stiffened by stringers. At the top and bottom door edgings, the main stringers form two beams to which are attached the door hinges and locking mechanisms.

The oxygen equipment compartment is formed by a floor, a vertical bulkhead and the solid web of Frames 5 and 7.

The upper compartment is bounded by a stressed skin ceiling and the top sections of Frame 5 and 7

Between Frames 7 and 8, on the starboard side, is housed the flight refuelling probe which is hinged to a fitting attached to Frame 7. The space between Frames 7 and 8, is divided into compartments by a partition and has the canopy frame at the top. This frame comprises of two box beams and a transverse box type structure which is attached to pick up the centre console and sight bracket. The skin between these two frames is formed by a hoop, riveted and screwed to both frames, which serves as the positioning plane for the windscreen.

2.2.4. Cockpit.

The cockpit is arranged between Frames 8 and 9 and is bounded by:-

Front - by Frame 8.

Rear - by the pressure bulkhead. Frame 9.

Bottom - by front and rear centre floors made of honeycomb panel and the two side floors made from light alloy sheet metal.

Side - by honeycomb panels from Frame 8 to Frame 9, extended by a conventional skin as far as Frame 10. On the port side provision is made for attaching an external cockpit access ladder.

Top - by the windscreen, the canopy and the fixed rear assembly.

On each side a longitudinal box structure limits the side panels at the top, and provide a flat surface for installing the windscreen and canopy. An inflatable seal, bonded into a support, provides the sealing between the cockpit and canopy.

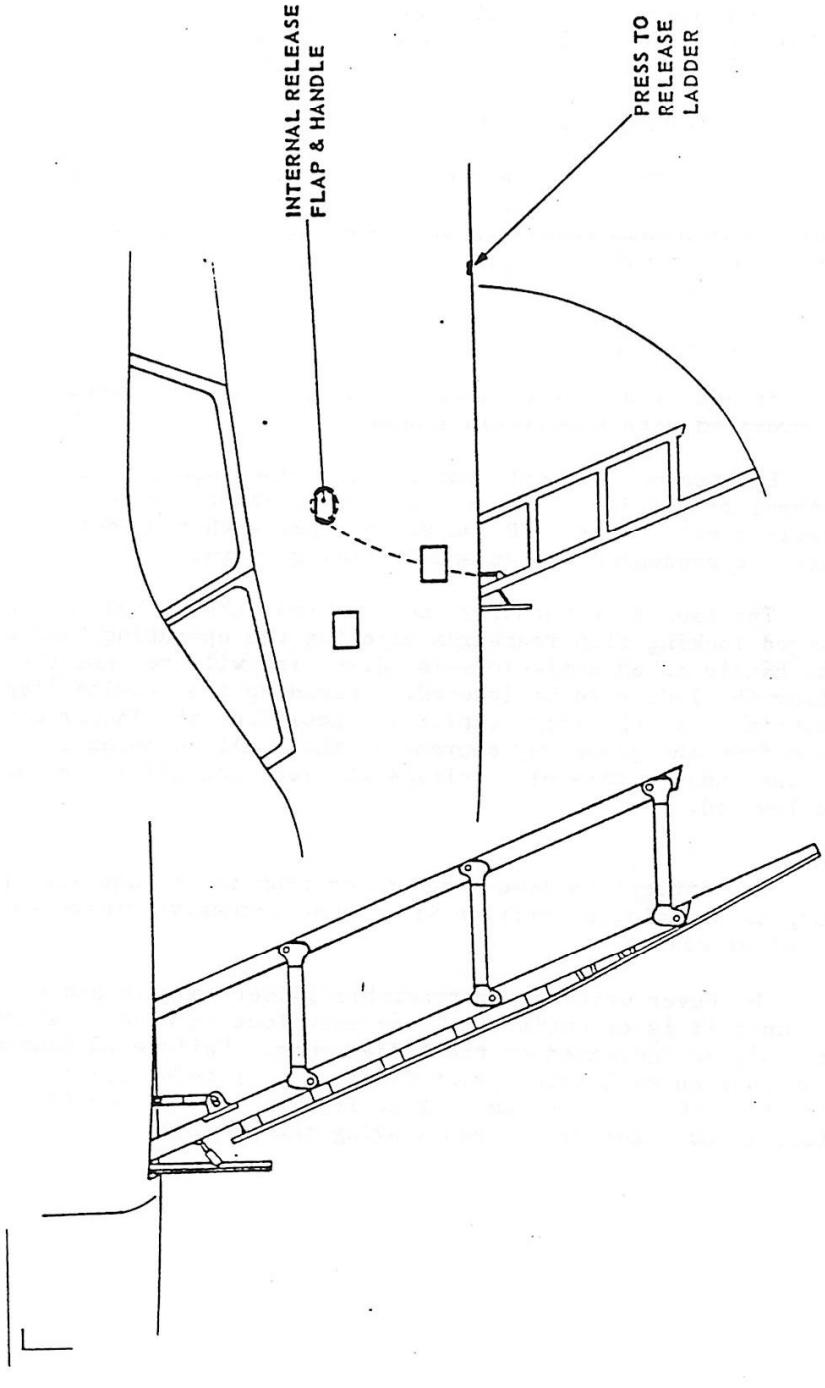

FIG.4 ACCESS TO COCKPIT

2.2.4. (contd)

These two box structures, constructed from milled plate, form the main members transmitting normal bending stresses; they also withstand stresses due to the pressurisation and, at Frame 10, form one of the front-to-centre fuselage connection members.

2.2.5. Nose Undercarriage Compartment.

The nose undercarriage compartment extends from Frame 8 to Frame 10 below the cockpit. It contains various electrical and hydraulic components including the nose undercarriage leg and its associated doors and fairings.

2.3. Cockpit Access System.

In addition to the externally mounted access ladder the Jaguar is provided with a built-in ladder.

Located on the port side of the front fuselage, it comprises of a three rung ladder which retracts aft into the underside of the fuselage between Frame 8 and 9, together with two footsteps in the fuselage concealed by two small folding doors.

The ladder is normally operated from the cockpit by opening the hinged locking flap rearwards exposing the operating handle, turning the handle in an anti-clockwise direction will release the locks and allow the ladder to be lowered. Providing the locking flap in the cockpit is in the rear (unlocked) position, the ladder can be operated from the ground by depressing the small push-panel at the rear of the ladder, this will release the lock and allow the ladder to be lowered.

NOTE:
Any attempt to lower the ladder from the ground with the locking flap in the closed position will cause excessive damage to the teleflex control.

Whenever using the retractable ladder to gain access to the cockpit it is essential that the left foot be used to start the ascent, as indicated on the ladder rung. Failure to conform to this instruction will cause great difficulty transferring from the ladder to the cockpit. The same difficulty will also arise if the left foot is not used first when leaving the cockpit.

CHAPTER 3.

STRUCTURES.

SUB ASSEMBLY.

CONTENTS.

3. CENTRE FUSELAGE.
3.2. DESCRIPTION.
3.3. FIXED ASSEMBLIES.

3.3.1. FRAMES.
3.3.2. MAIN FITTINGS AND MOUNTINGS.
3.3.3. FLOORS.
3.3.4. BEARERS.
3.3.5. FUEL TANKS.
3.3.6. AIR DUCTS.

3.4. MOVING ASSEMBLIES.
3.4.1. ADDITIONAL AIR INTAKE DOORS.
3.4.2. MAIN UNDERCARRIAGE DOORS.
3.4.3. AIR BRAKES.
3.4.4. GUN PURGING SCOOPS.

3.5. DETACHABLE ASSEMBLIES.
3.5.1. SPINE ASSEMBLY.
3.5.2. QUICK RELEASE ACCESS DOORS.
3.5.3. INTERNAL DETACHABLE ITEMS.

ILLUSTRATIONS.

FIG.5. CENTRE FUSELAGE STRUCTURE.
FIG.6. MAIN ATTACHMENT FITTINGS.
FIG.7. FUSELAGE COMPARTMENTS.

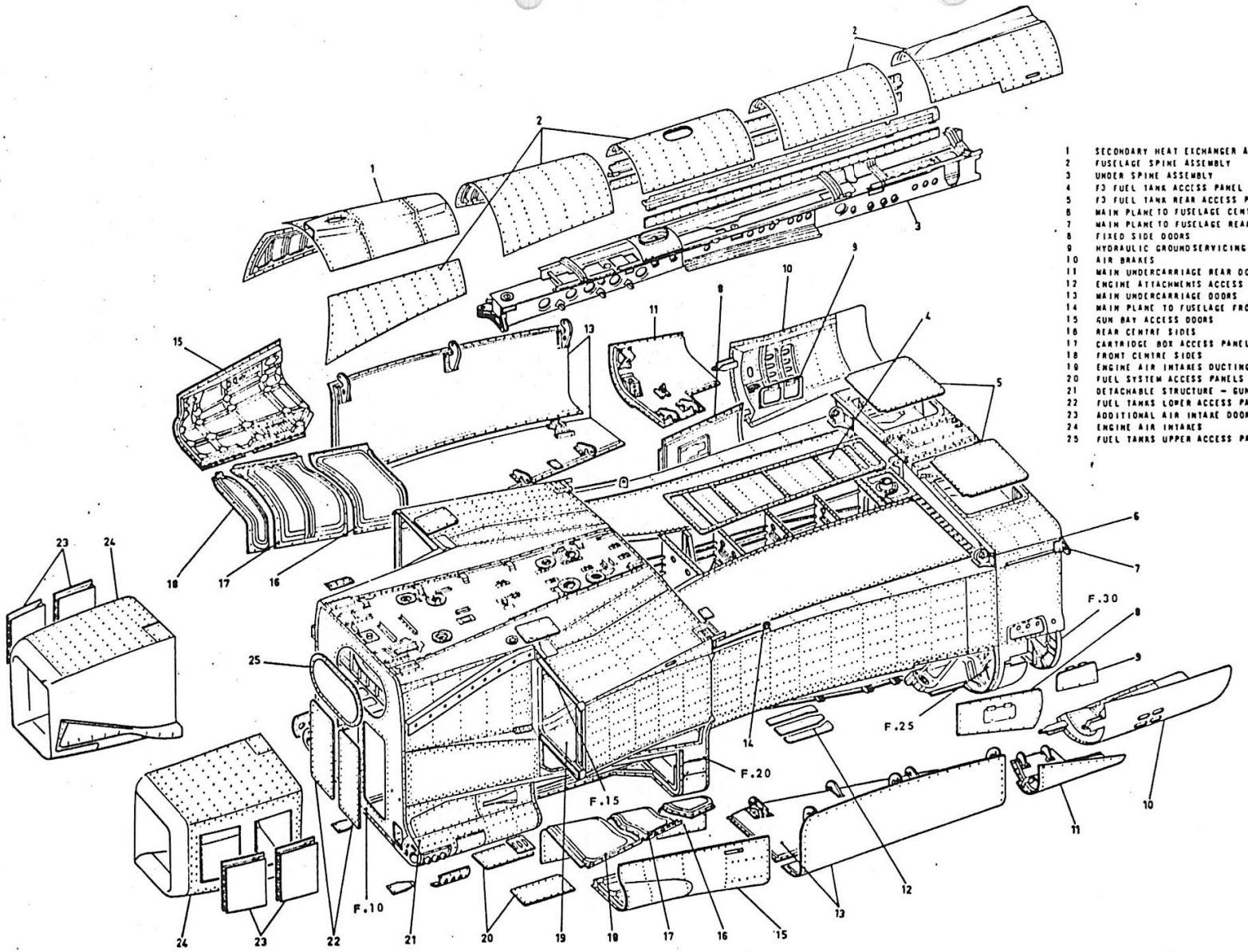

FIG.5 CENTRE FUSELAGE STRUCTURE

3. CENTRE FUSELAGE.

3.1. Introduction.

The centre fuselage is of composite construction, using both honeycomb sandwich panels and conventional structure. The metal used in the structure for the skins and main frames is AU4SG and for the secondary items AU4G1. The fuselage section is composed of three separate zones:-

Zone 1. - from Frame 10 to Frame 20; which incorporates F1 and F2. fuel tanks, N1 and N2 collector tanks and the gun housings and cartridge box compartments.

Zone 2. - from Frame 20 to Frame 25; forms the centre box structure incorporating part of F3 fuel tank. This structure carries the mainplanes and the main undercarriages.

Zone 3. -. from Frame 25 to Frame 30; the rear box structure incorporating the remainder of F3 fuel tank, and the airbrakes together with their operating mechanism.

3.2. Description.

The centre fuselage can be divided into four separate assemblies:-

Fixed Assemblies.

- Front Section.
- Centre Box structure.
- Rear box structure.
- Air ducts.

Moving Assemblies.

- Main Undercarriage door assemblies.
- Auxilliary air intake doors.
- Air brakes.
- Gun purging scoops.

Detachable Parts.

- Spine assembly.
- Doors on the fuselage.
- Central sides.
- Internal detachable parts.
- Gun hoisting assembly.

3.2. (contd)

Connection with the other sections.

Front-to-centre fuselage connection (Frame 10)

Centre-to-rear fuselage connection (Frame 30)

Mainplane-to-centre fuselage connection.

3.3. Fixed Assemblies.

The structure is made up of various parts which when fitted together, divide the centre fuselage into separate compartments. The parts comprise of frames, bearers, floors, stringers and skins.

3.3.1. Frames.

There are five main frames; Frame 10, 15, 20 (composite construction) and Frame 25 and 30 (conventional construction). The intermediate frames are conventionally constructed of light alloy.

Frame 10 provides the attachment of the centre fuselage to the front fuselage and contains the access panels to F1 fuel tank and to N1 and N2 collector tanks.

The intermediate Frames 11 to 20 serve as internal structure for fuel tanks F1 and F2.

Frame 15 provides the attachment for the top and bottom arms of the two engine air intake duct structures. The two top arms are each connected to the frame by two bolts whilst the bottom arms are riveted. Three access doors to fuel tank F1 and the collector tanks, similar to those in Frame 10 are made in this frame.

Frame 20 is constructed in four separate sections joined by rivets and bolts. At the bottom is a spacer fitting used for attaching the pylon mounting. On the front face, are riveted four fittings that house the gun mountings.

Frame 25 comprises five sections joined together, in particular two side fittings in which are machined the central attachments for the mainplanes and the hinge brackets for both main undercarriage and airbrakes.

Frame 30 joins the rear fuselage to the centre fuselage by multi-bolted connections. Two rear attachment fittings for the mainplane are fastened to the top of the frame, whilst the two hinges for the airbrake jacks are machined at the bottom.

3.3.2. Main Fittings and Mountings.

Between Frames 10 and 30 are located many of the major attachment points and fittings, including those for the centre line pylon.

3.3.2. (contd)
Attachment fittings for the main undercarriage units, drag struts and up-lock units. Airbrake and airbrake jack hinge fittings. Gun fittings and mountings (front, centre and rear).

Main attachment fittings on the centre fuselage consist of two main fittings riveted to Frame 10 and Frame 15 at the top, and two riveted to the lower base plate for the attachment of front to centre fuselage together with four centre fittings riveted to the internal structure between Frame 10 and the gun housing zone. These eight fittings secure front to centre fuselage.

Six attachment brackets for the mainplanes are located on the upper box structure between Frames 20 and 30. plus two mainplane leading edge attachment points.

Cartridge box compartments, two in number, formed by three oblique frames of composite structure, located in the zone between Frames 15 and 20. Teflon rubbing strips are bonded to the bottom of the frames on the inner faces of the compartments. Both cartridge boxes are loaded from the port side.

3.3.3. Floors

In the zone between Frames 10 and 20 there is a floor composed of three panels:-

Front panels which are located on either side of the collector tanks, and are of honeycomb sandwich construction, the panels form the underside of fuel tank F1.

The rear panel, of conventional construction, forms the floor of the cartridge box compartments, and is riveted to the bottom flanges of the sloping frames.

A sloping panel of conventional construction forms the bottom of fuel tank F2 at position Z.95.

3.3.4. Bearers and Partitions.

At position Y.300, between Frames 10 and 20 are two bearers, running symetrically in the longitudunal plane, they form the inner walls for the gun housings and gun barrel zones, they are of composite construction utilising honeycomb sandwich and conventional construction.

Located between Frames 10 and 15 is the centre bearer, riveted to the sloping floor at Z.95, it separates the two collector tanks.It is honeycomb sandwich construction with several openings for fuel system components.

The rear bearers, located between Frames 25 and 30 to which they are attached, form the symmetrical inner walls for the airbrake housings.

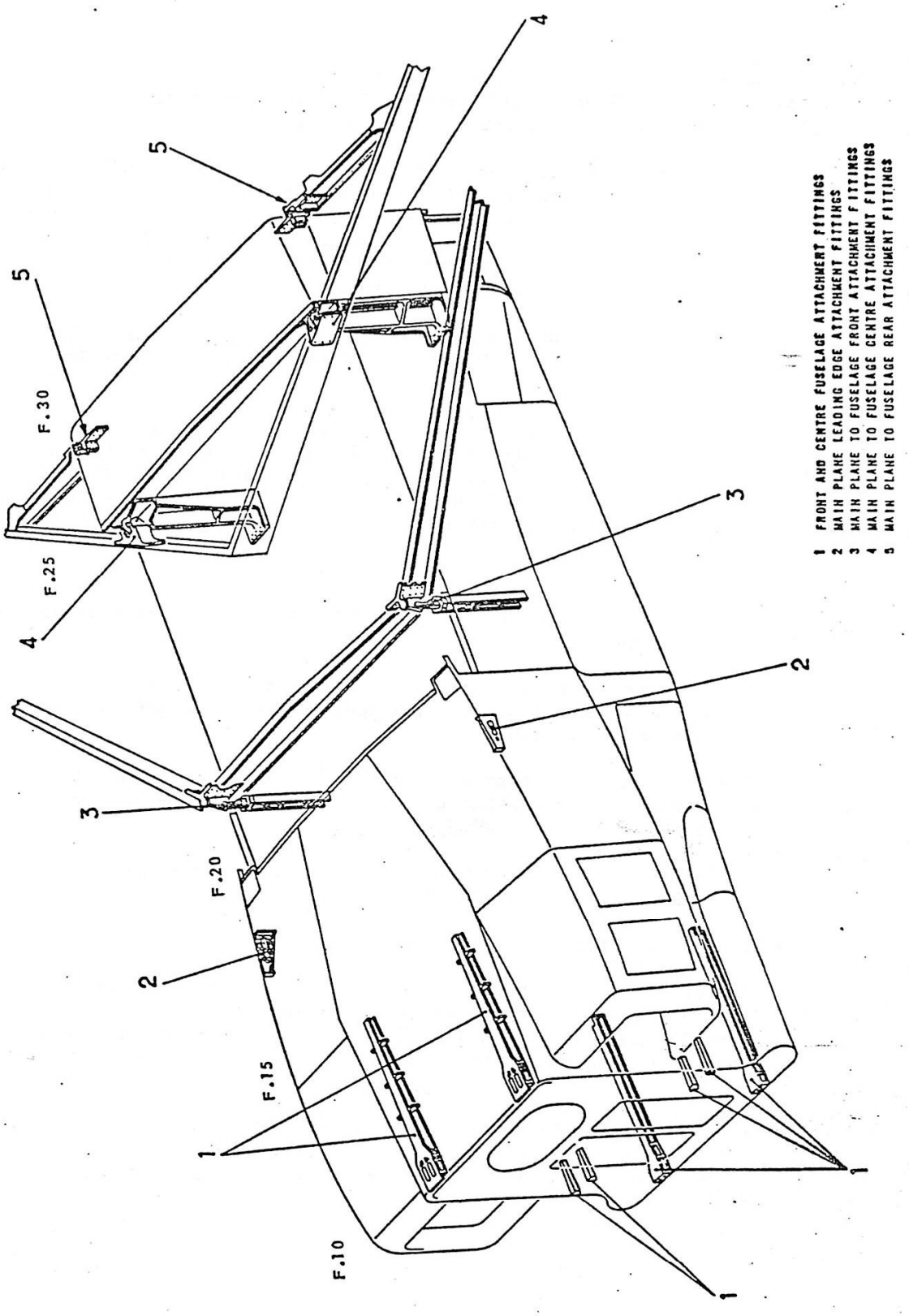

FIG.6 MAIN ATTACHMENT FITTINGS

3.3.4. (contd)

The lower bearers, conventionally constructed, located between Frames 20 and 25 form the inner walls of the main undercarriage bays. Several openings, closed by inspection panels, give access to the centre box structure.

The upper bearers form the sidewalls of F3 fuel tank forward position. Joined by pressed sheet diaphragms, they are attached at their ends to Frames 20 and 25.

3.3.5. Fuel Tanks.

Within the centre fuselage are three integral fuel tanks.

Tank F1 located between Frames 10 and 15.

Tank F2 located between Frames 15 and 20.

Tank F3 forward portion, located between Frames 20 and 25, and the rear portion between Frames 25 and 30. The sides of the rear portion are formed by the outer skin panels of the fuselage, in which are fitted the access doors to the hydraulic ground test connections.

The two collector tanks N1 and N2 are located in the lower part of the centre fuselage between Frames 10 and 15. The upper part of each tank enclosed by the 'saddle' shaped lower part of tank F1.

Each collector tank compartment contains a flexible self-sealing bag tank, secured by a front and rear stud ring.

3.3.6. Air Ducts.

The external part of the air ducts are formed by air intakes of rectangular cross-section, located on either side of the top section of the fuselage between Frames 10 and Stn 6500, at which point they merge into the fuselage. Forward of Frame 15, the air intakes form two detachable sub-assemblies attached to the fuselage by screws and nuts.

A space is left between the sides of the fuselage and the air ducts which forms the boundary layer bleed.

From Stn 6500 to Frame 25 the air duct continues in its rectangular cross-section and is of composite construction. At Frame 25 the cross section becomes cylindrical, passing through the rear portion of F3 fuel tank, it is attached to both Frames 25 and 30. Frame 30 also incorporates a sealed mounting for the engine air intake ducting.

3.4. Moving Assemblies.

3.4.1. Additional Air Intake Doors.

Additional air intake doors are located in the detachable air

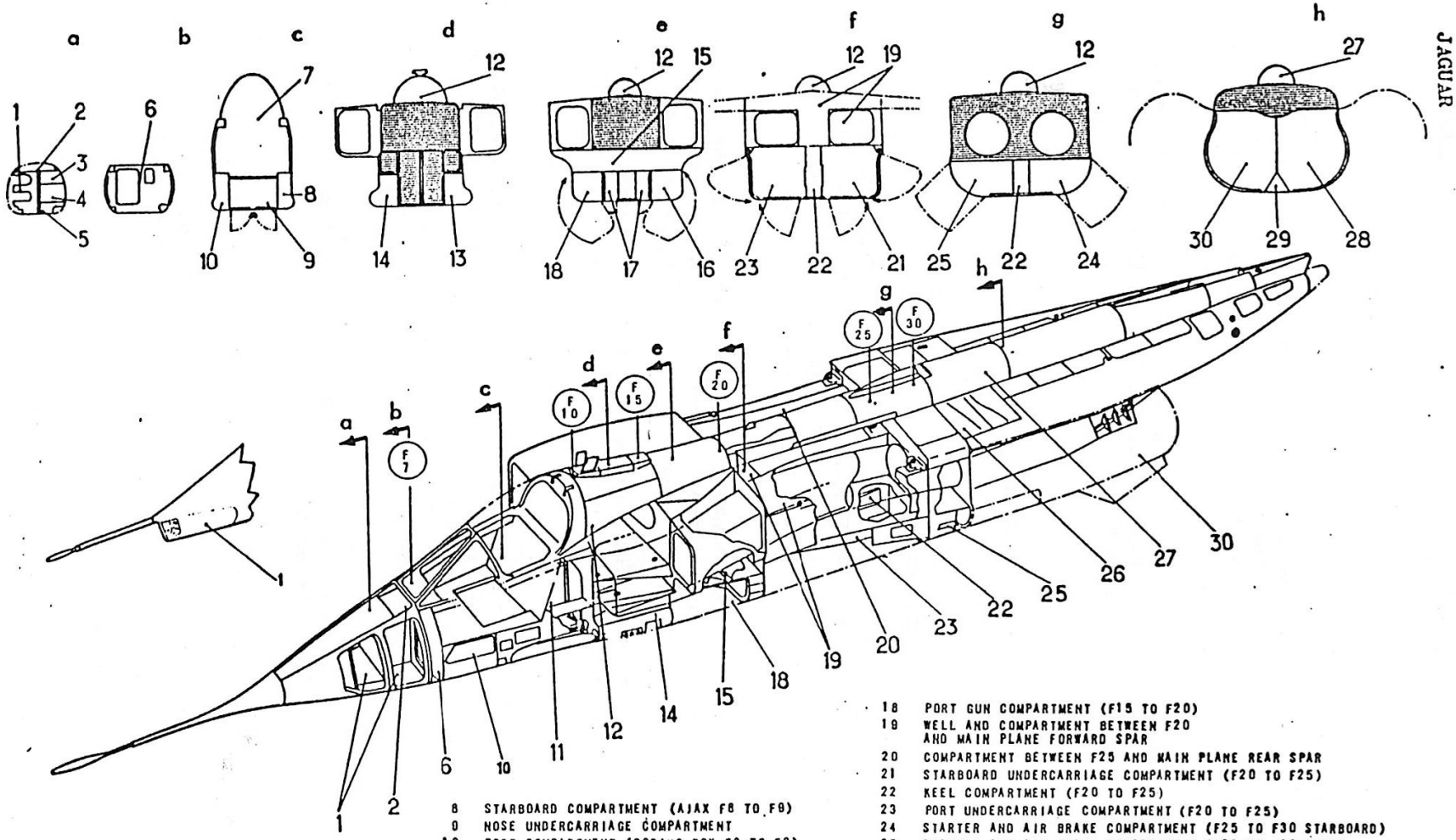

FIG.7 FUSELAGE COMPARTMENTS

1 OPERATIONAL EQUIPMENT COMPARTMENTS
2 UPPER COMPARTMENT (F5 TO F7)
3 CONVERTER COMPARTMENT
4 OXYGEN COMPARTMENT
5 FLIGHT REFUELLING PROBE COMPARTMENT
6 NOSE UNDERCARRIAGE FRONT ATTACHMENT COMPARTMENT
7 COCKPIT
8 STARBOARD COMPARTMENT (AJAX F8 TO F9)
9 NOSE UNDERCARRIAGE COMPARTMENT
10 PORT COMPARTMENT (SPRING BOX F8 TO F9)
11 NOSE WHEEL WELL (F9 TO F10)
12 CENTRE FUSELAGE SPINE (F10 TO F30)
13 STARBOARD GUN COMPARTMENT (F10 TO F15)
14 PORT GUN COMPARTMENT (F10 TO F15)
15 CARTRIDGE BOX COMPARTMENT
16 STARBOARD GUN COMPARTMENT (F15 TO F20)
17 LINKS COMPARTMENT
18 PORT GUN COMPARTMENT (F15 TO F20)
19 WELL AND COMPARTMENT BETWEEN F20 AND MAIN PLANE FORWARD SPAR
20 COMPARTMENT BETWEEN F25 AND MAIN PLANE REAR SPAR
21 STARBOARD UNDERCARRIAGE COMPARTMENT (F20 TO F25)
22 KEEL COMPARTMENT (F20 TO F25)
23 PORT UNDERCARRIAGE COMPARTMENT (F20 TO F25)
24 STARTER AND AIR BRAKE COMPARTMENT (F25 TO F30 STARBOARD)
25 STARTER AND AIR BRAKE COMPARTMENT (F25 TO F30 PORT)
26 HYDRAULIC POWER SYSTEM COMPARTMENT (AFT OF F30)
27 REAR FUSELAGE SPINE
28 STARBOARD ENGINE COMPARTMENT
29 ACCESS TO ENGINE IGNITION AND FIRE DETECTION EQUIPMENT
30 PORT ENGINE COMPARTMENT

3.4.1. (contd)

intake assemblies; two doors on each side, and each door consisting of an outer and inner door. They improve the air supply to the engines at low forward speeds and high r.p.m. settings, such as at take-off.

The doors are pivoted by hinges and hinge pins on fittings attached to the intake assembly. They open by vacuum when the engines are at the surging limits. An interlinking system, using links, enables the two doors (inner and outer) to overlap the open position. The doors are closed by springs mounted on the pins and in the outer door hinge.

3.4.2. Main Undercarriage Doors.

There are THREE moving undercarriage doors attached to each Main Undercarriage aperture structure which are of honeycomb construction. One door being connected to the undercarriage leg structure and moves when the Main Undercarriage Leg travels to either the retracted or lowered positions. The remaining two doors hinge at points within the fuselage structure and open from the centre outwards.

Two hydraulically operated jacks, of which one is equipped with internal locking collets in the RETRACTED position, are incorporated to open and close the undercarriage doors. The forward operating jack allows the undercarriage doors to OPEN and remain LOCKED OPEN, whereas the rear operating jack assists in opening and closing the outboard door only.

3.4.2.1. Main Undercarriage Door Locks.

The door locking for each undercarriage door comprises of a double locking unit attached to the fuselage structure, a single locking unit also attached to the fuselage structure and a single locking unit attached to the undercarriage fairing. Each locking unit being actuated by a roller attached to the door which operates a spring loaded latch hook.

The locking unit is MECHANICALLY LOCKED & HYDRAULICALLY UNLOCKED.

Each locking unit incorporates a Micro Switch which is in circuit series with the undercarriage electrical sequencing.

The undercarriage doors locks can be unlocked and the doors OPENED on the ground by the operation of a selector switch situated in a panel on the PORT SIDE of the fuselage at Frame 20, and the use of the hydraulic hand pump.

To enable servicing procedures within the undercarriage stowage bays. This three-pole electrical switch must be LOCKED in the OPEN POSITION by a LOCKING PIN attached to a RED PENNANT if the undercarriage doors are selected to OPEN.

3.4.2.1. (contd)

When the locking pin is removed and the switch access panel CLOSED the selector switch is automatically in its correct position for flight.

3.4.2.2. Micro Switch Units.

A removable switch sub-assembly is secured to the lock body by four Allan screws and contains 3 PETEREEN micro switches. The switches are activated by a cranked lever integral with the main body of the lock. The switch assembly can be replaced without removing the main assembly unit or disturbing any hydraulic supplies.

NOTE:

IN-SITU ADJUSTMENT SHOULD NOT BE NECESSARY AS ALL ADJUSTMENT AND SETTING UP PROCEDURES CAN BE DONE PRIOR TO FITTING.

3.4.3. Air Brakes.

Located symmetrically on either side of the centre fuselage, they are conventionally constructed and of the flap type. Operated by hydraulic jacks, they open by pivoting forward to a maximum open angle of 51°. When closed they fit flush with the fuselage.

Hinge brackets are on Frame 25, and jack attachment brackets are on the front face of Frame 30.

A roller mounted on a shock-absorbing support allows the airbrake to lock in the closed position by engagement with the hook of the locking unit, attached to the forward face of Frame 30.

An adjustable 'Closed Position' stop is located at Frame 30.

A starting safety micro switch is fitted to the lower port hinge, this ensures that the airbrakes are fully open before the Microturbo starter unit can be operated.

When airbrakes are selected out it causes the aircraft to 'pitch-up' so to automatically correct this change of trim a potentiometer is fitted to the starboard lower hinge, actuated by the airbrake via a link rod, it sends a signal to the pitch auto-stab system, which in turn signals the tailplane P.F.C.U's. to counteract the trim change. If the auto-stab system is switched off, the aircraft will require trimming manually by the pilot.

3.4.4. Gun Purging Scoops.

Located in the upper panel of each structure in the gun barrel zone. Each panel is hinged at the rear and operated by an electrical actuator.

During the preparation to fire sequence the scoop is automatically opened to form a ram air intake to ventilate each gun by means of diffuser nozzles which open into each compartment.

3.5. Detachable Assemblies.

These comprise of structural items that are joined to the main structure by detachable connections, and can be removed if necessary for servicing, access and component changing.

These assemblies are:-

The spine assembly.

Quick-release access doors.

The internal detachable items.

3.5.1. The Spine Assembly.

Located on the dorsal part of the centre fuselage, from behind the cockpit to Frame 30, it is divided into five sections, each of which has a detachable panel for ease of access, attached to the spine structure by screws and anchor nuts. A rubber seal is fitted for rain-proofing.

The first two of the five sections form the intake and ducting for the secondary heat exchanger, together with the mountings for the heat exchanger itself. The third section houses the rear air duct and the ejector, and provides diffusion of the heat exchanger air. In the fourth section is housed the top anti-collison light. The fifth section incorporates the air inlet and part of the ducting for the primary heat exchanger.

Running through the spine will be found the push-pull rods for the flying controls.

3.5.2. Quick-Release Access Doors.

These comprise all doors on the centre fuselage which have a quick release locking mechanism, they include:-

Gun doors.

Links compartment doors.

Group of cartridge box compartment doors.

Hydraulic ground servicing connection doors.

Gun barrel zones access doors.

Servicing doors at Stn. 6000, port side, two doors.

Central sides.

Rear fixed side doors. On the starboard door is the access panel to the refuelling panel.

3.5.3. Internal Detachable Items.

These include access panels to the following:-

Fuel Tanks F1 and F2, at Frame 10 and 15.

Collector tanks N1 and N2, at Frame 10 and 15.

Fuel tank F3, top panels.

CHAPTER. 3.

STRUCTURES.

SUB ASSEMBLY.

CONTENTS.

4. REAR FUSELAGE.
4.1. GENERAL.
4.2. CONSTRUCTION.
4.2.1. UPPER FUSELAGE.
4.2.2. KEEL.
4.2.3. TAIL SECTION.
4.2.4. ENGINE BAY DOORS.
4.2.5. SPINE.
4.2.6. TAILPLANE SPIGOT HOUSING.

4.3. ENGINE BAY DOORS.
4.4. TAIL UNIT.
4.4.1. FIN.
4.4.2. RUDDER.
4.4.3. TAILPLANE.

ILLUSTRATIONS

FIG.8. REAR FUSELAGE.
FIG.9. REAR FUSELAGE STRUCTURE.
FIG.10. REAR FUSELAGE G.A. ACCESS PANELS.
FIG.11. ENGINE BAY DOORS.
FIG.12. FIN DETAILS.
FIG.13. FIN DETAILS.
FIG.14. RUDDER DAMPER UNIT. (Post Mod.675).
FIG.15. RUDDER REMOVAL AND INSTALLATION.
FIG.16. TAIL PLANE KEY DIAGRAM.
FIG.17. TAIL PLANE.
FIG.18. EXTRACTION/INSTALLATION OF BEARING INNER RACE.

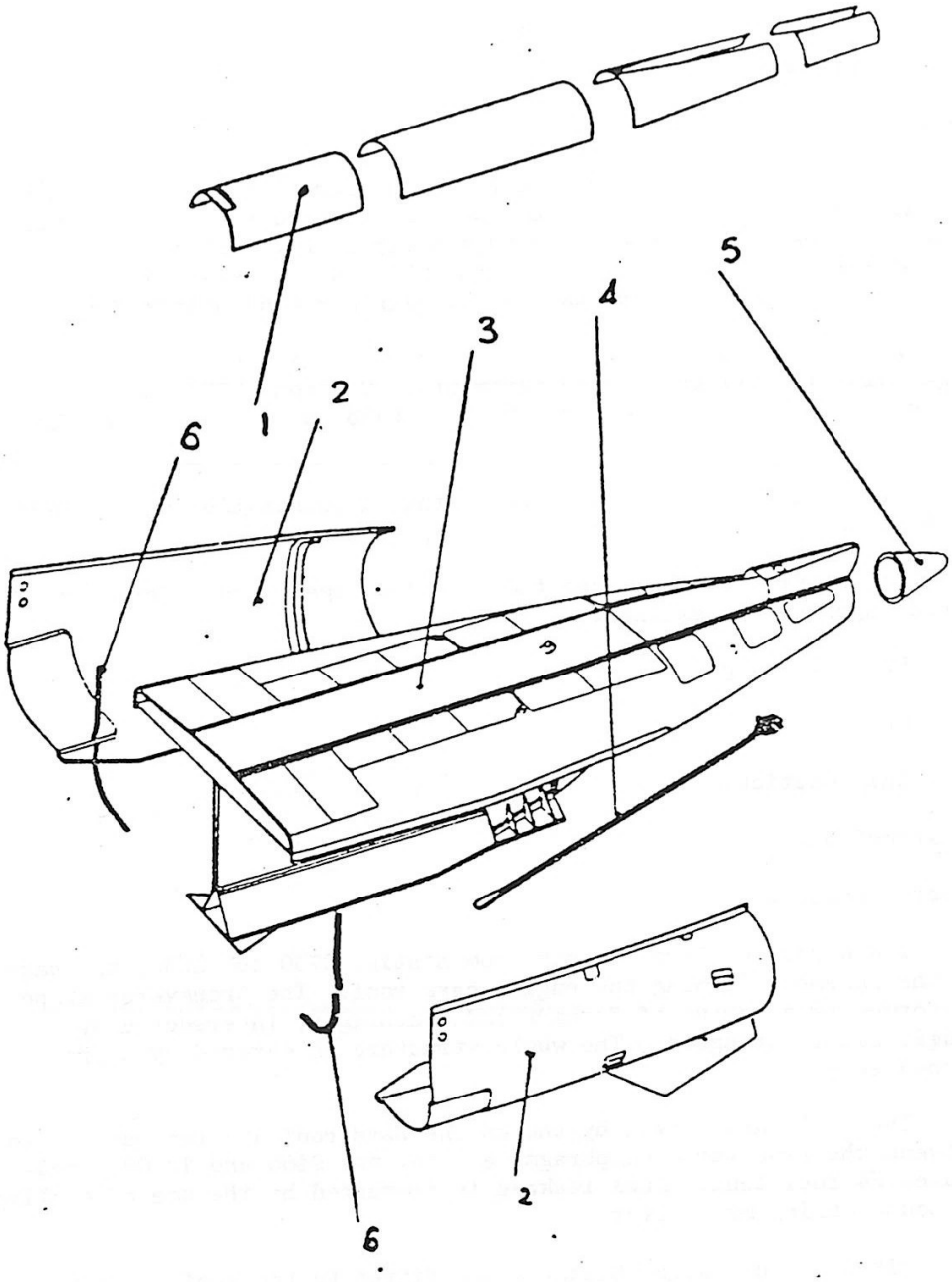

1. Spine – rear fuselage
2. Engine bay door
3. Rear fuselage structure
4. Arrester hook
5. Brake parachute release cone
6. Centre-to-rear fuselage connection

FIG.8 REAR FUSELAGE

4. REAR FUSELAGE.

4.1. General.

The rear fuselage (Fig.8) carries the dorsal fin and tailplane and accommodates both propulsion units in bays on each side of the keel. The bays are enclosed by engine bay doors, each door being fitted with a ventral fin to increase the inherent stability of the aircraft, caused by fin blanketing at high angle of attack flight.

The cavity above the engine bay roof, bounded by the rear fuselage skin, is divided into compartments. Stations 8750 to 9485 forms an equipment bay, whilst stations 9485 to 12000 forms an integral fuel tank.

Aft of station 12410 are housed the tailplane and rudder flying control units and brake parachute equipment.

For descriptive purposes the rear fuselage is considered in three major sub-assemblies.

Upper Fuselage.

Keel.

Tail Section.

4.2. Construction.

4.2.1. Upper Fuselage.

The upper fuselage extends from station 8750 to 12000, the base of the assembly forming the engine bays roof. The transverse shape is formed by a series of formers and diaphragms, intersected by longitudinal stringers. The whole structure is covered by a pre-shaped skin.

The enclosure formed by the engine bays roof and the outer skin between the transverse diaphragms at stations 9485 and 12000 constitutes F4 fuel tank. Fuel leakage is prevented by the use of sealing compound during manufacture.

Titanium insulating blankets are fitted to the roof of both engine bays to protect the upper fuselage compartments from heat generated by the propulsion units.

Removable panels (FIG 10), in the upper surface, give access to the various compartments. Panel cut-outs in the equipment compartment have a sealing compound applied to their landings during build. Damaged seals can be repaired in situ. Panels giving access to the fuel tanks are fitted with gaskets.

Two longitudinal stringers along the upper surface are fitted with captive nuts to accommodate the spine fairings. Reinforced areas

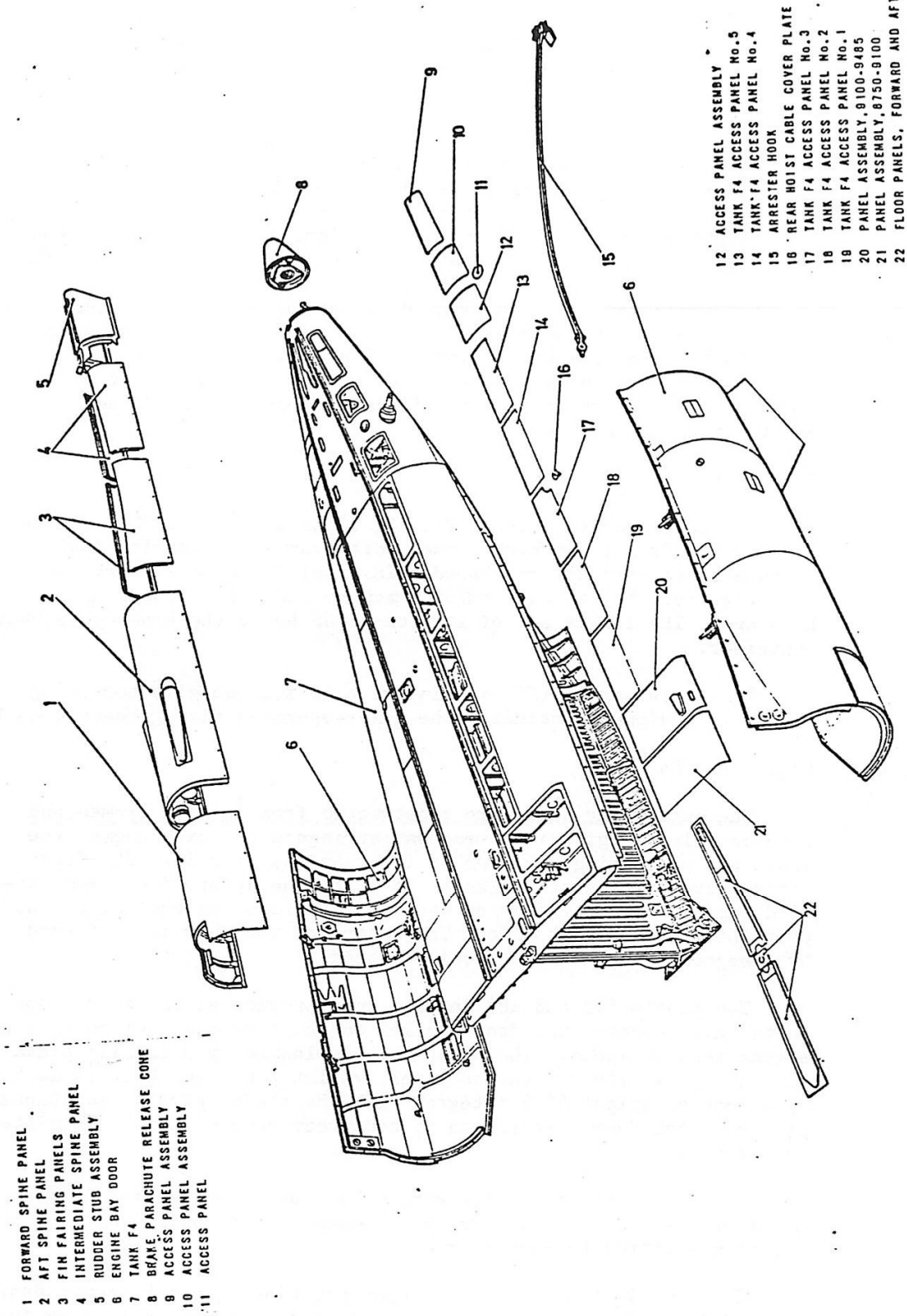

FIG.9 REAR FUSELAGE STRUTURE

4.2.1. (contd)
in the base of the upper fuselage provide anchorage for the propulsion unit attachment brackets.

4.2.2. Keel.

The keel is of inverted 'Y' section and extends from stations 8750 to 11450 along the aircraft centre line beneath the upper fuselage, forming the division between the two engine bays. The assembly is of light alloy and titanium construction, and is double skinned, the outer skin being of corrugated section to give increased rigidity.

Removable panels in the vented surface give servicing access to equipment housed at the base of the keel (Fig 10),whilst reinforced areas in the vicinity of station 10930 provide anchorage for the arrestor hook mechanism. A series of Frames terminating at station 12000 are covered by radiation shields and form a streamlined continuation of the keel.

4.2.3. Tail Section.

The tail section extends from Stations 12000 to 13720, and is constructed from transverse frames, diaphragms and longitudinal stringers, covered by pre-shaped skin. Reinforced areas provide anchorage for the fin attachment brackets and tail plane hinge shaft housings. The frames aft of station 12635 house the brake parachute container.

Removable panels (Fig 10),in the tail section give servicing access to equipment including the power-operated flying control units.

4.2.4. Engine Bay Doors.

The engine bay doors are constructed from lateral frames and intercostals, longitudinal members, stringers and diaphragms, the whole assembly being enclosed by inner and outer skin. The doors embody screw-type captive fasteners along the upper, lower and forward edges. The rear edge of each door follows the contour of the propulsion unit reheat pipe. The centre of the door is stiffened by a segment of the engine seal bulkhead.

Two panels (12 and 18) in each door provide access to the special bolts which connect the door section to the fuselage section of the engine seal bulkhead. The upper bolt is locked by a locking plate (13) integral with the access panel, whilst the lower bolt is locked by a locking spigot (17) integral with the access panel. Additional panels in the door give access to equipment housed in the associated engine bay.

For ground servicing the engine bay doors can be hinged open after releasing the fasteners, by an outward and upward movement about two hinges fitted to each door.

The door is retained in the open position by a telescopic door stay (24). One end of the stay, has a bayonet-type end fitting for

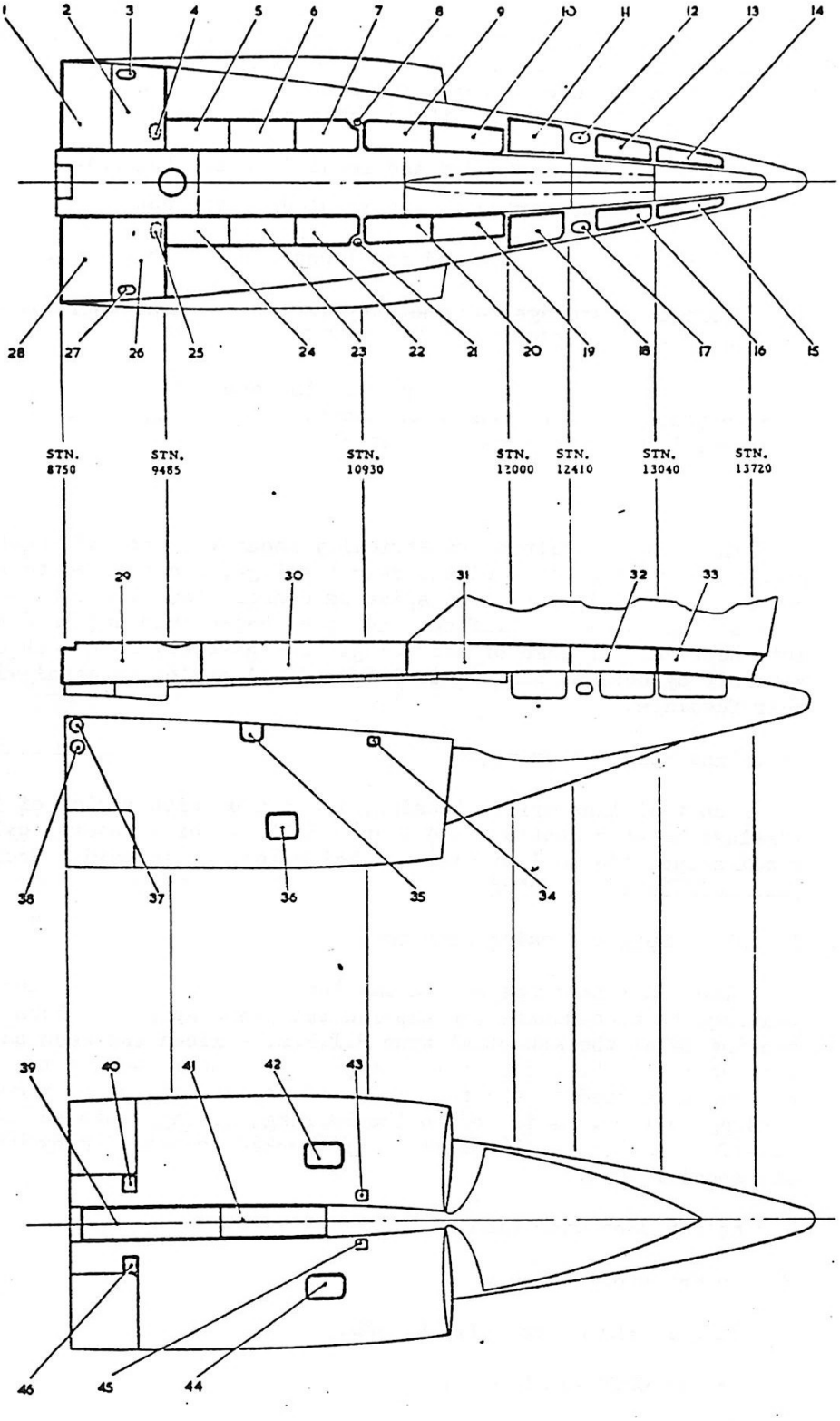

FIG.10 REAR FUSELAGE G A ACESS PANELS

4.2.4. (contd)
attachment to the undersurface of the mainplane (25) and the other end terminates in a cranked plug for locating in either one of two holes (21) in the door. The stay allows the door to be retained open in any one of the following three positions:-

40 deg - stay extended and located on the top hole.

60 deg - stay extended and located in the bottom hole.

80 deg - stay retracted and located in the bottom hole.

There is a stowage for the stay inside the door where it is secured by two pip pins.

Each ventral fin is attached to its respective engine bay doors by a central spigot bolted to the door. A yaw spigot either side of the central spigot ensures correct alignment of the fin.

4.2.5. Spine.

The spine is fitted symmetrically about the aircraft centre-line along the upper surface of the rear fuselage, and is used to house controls and equipment. The spine is constructed from light-alloy frames, longitudinal stiffeners and pre-shaped skin and is divided into sections for ease of servicing. The assembly is attached to the aircraft by screws locating in longitudinal angles integral with the rear fuselage.

4.2.6. Tailplane Spigot Housings.

Each tailplane spigot housing, mounted on either side of the rear fuselage between stations 12410 and 12635, is of a tapered cylindrical shape, the smaller diameter being located inboard. Each housing accommodates two bearings.

4.2.6.1. Tailplane Spigot Housing Bearings.

The inner bearings have a smaller diameter than the outer bearings to accommodate the tapered tailplane spigots. Each inner bearing is of the spherical type P.T.F.E. - lined and each outer bearing is of the needle roller type. The inner race of the outboard bearing is fitted to the tailplane spigot, and the outer race, including rollers, is fitted to the bearing housing, both races being interference fits. All bearings are locked in position by washers and special nuts.

4.3. Engine Bay Door Operation.

4.3.1. Engine Bay Door Opening.

Ensure FLAPS are fully HOUSED.

Fully OPEN AIR BRAKES.

4.3.1. (contd)

Remove access panels 12 and 18.

Slacken the Engine Seal Bulkhead Upper Bolt. (14) & Lower Bolt (16)

Support the engine doors and release the 43 fasteners around the three sides of the engine bay door. Remove engine seal Upper and Lower bolts.

Allow the door to move OUTBOARD until the stop bolts (5) locate in the locks (4) at the inboard end of each hinge slot.

Hinge the door to the required position (40°, 60° or 80°), and fit the door stay assembly to the location points in the DOOR and under surface of the mainplane respectively.

Fit door protective guards at the lower forward and rear positions.

4.3.2. Engine Bay Door Closing.

Remove protective guards from lower forward and rear door positions.

Remove door stay assembly and stow in stay assembly stowage, on the inside of the door.

Move the door inboard along the hinges until the door is FLUSH to the fuselage and the spigot base at the upper joint of the engine seal bulkhead is located. Support the engine door in this position. Refit Upper & lower seal bolts and tighten 2-3 turns.

Refit the 43 engine panel fasteners working from the engine seal bulkhead towards the front and rear of the door, alternately refitting an upper and lower bolt. Torque load lower bolt to the specified figure, repeat operation on upper bolt.

Tighten the 43 engine panel fasteners in the order described above to the specified torque.

Refit upper and lower seal bolt access panels if locking devices will not align with bolts the torque loading may be increased to enable a correct fit to be achieved.

NOTE:
Torque loading must not exceed maximum permitted figure.

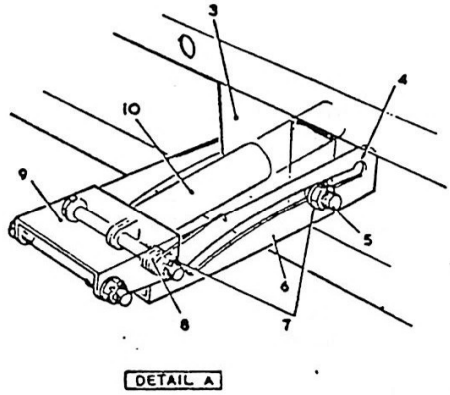

DETAIL A

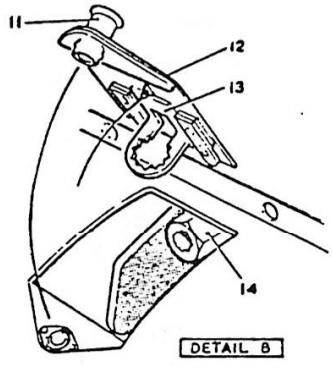

DETAIL B

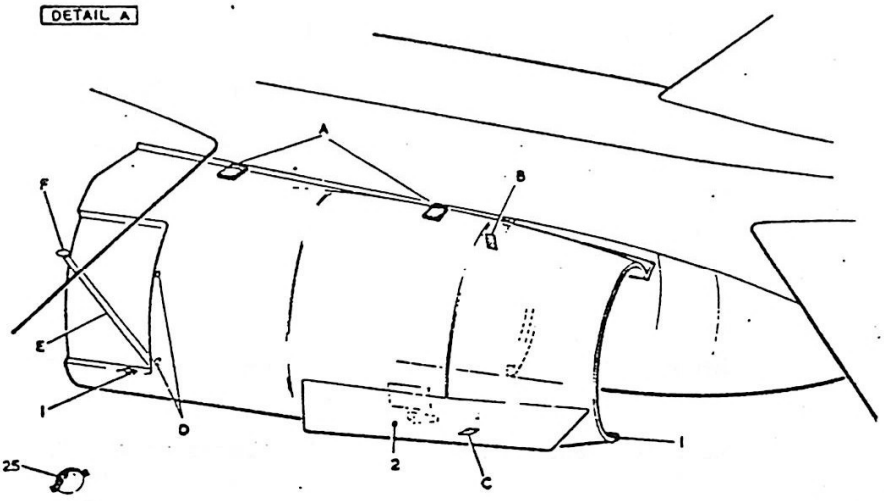

DETAIL F 25

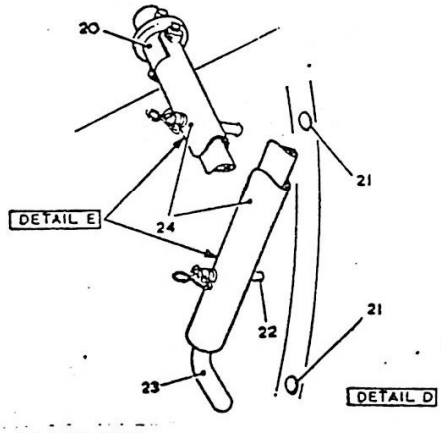

DETAIL E

DETAIL D

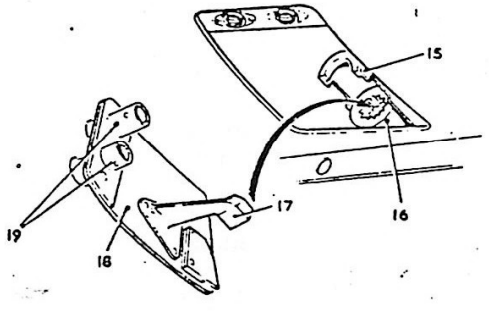

DETAIL C

1 ENGINE BAY DOOR GUARD
2 VENTRAL FIN
3 HOUSING
4 LOCK
5 STOP BOLT
6 HINGE BODY
7 WASHER CLEARANCE (0.5 mm)
8 LOCK RETAINING SPRING
9 HINGE-TO-DOOR ATTACHMENT BRACKET
10 HINGE SPIGOT
11 ROTARY FASTENER
12 ACCESS PANEL, ENGINE SEAL BULKHEAD, UPPER BOLT
13 LOCKING PLATE, ENGINE SEAL BULKHEAD, UPPER BOLT
14 ENGINE SEAL BULKHEAD, UPPER BOLT
15 RETENTION CAGE
16 ENGINE SEAL BULKHEAD, LOWER BOLT
17 LOCKING SPIGOT, ENGINE SEAL BULKHEAD, LOWER BOLT
18 ACCESS PANEL, ENGINE SEAL BULKHEAD, LOWER BOLT
19 ROTARY FASTENER
20 SWITCH COUPLING
21 ENGINE BAY DOOR LOCATION FOR ITEM 24
22 QUICK-RELEASE PIN
23 CRANKED PLUG
24 DOOR STAY ASSEMBLY
25 MAIN PLANE LOCATION FOR ITEM 24

FIG.11 ENGINE BAY DOORS

4.3.3. Engine Bay Door Removal.

Fully OPEN engine bay door.

Fit door stay assembly.

Make aircraft electrical system SAFE.

Disconnect the Fire Detection System electrical plug and socket connections mounted on the engine bay door.

Disconnect engine bay door Bonding Strip at engine door.

Remove the split pin, nut and washer from each hinge stop bolt.

Support the door and remove the stop bolts and washers.

Slide the engine door outboard until free from the aircraft and remove door assembly.

4.3.4. Installation.

Lubricate the hinges with grease XG-276.

Offer the engine door up to the fuselage, guiding the hinge spigots into their housings.

Refit the stop bolts through the hinge slots and housings, ensuring that the washers are fitted correctly.

Refit the door stay assembly.

Reconnect engine bay door bonding strip.

Reconnect the fire detection plug and socket connections.

Test Fire Detection System.

Close Engine Bay Door and check fitment.

4.4. TAIL UNIT.

4.4.1. Fin.

The fin comprises a basic torsion box structure with detachable leading-edge and fin-tip fairings. R.F. detector heads and radomes are installed forward and aft of the upper fin and are joined by fairing panels which incorporate twin tail navigation lights.

The torsion box is a structure of spars and horizontal ribs, profiled by the arrangement of the boundary spars and ribs and covered by light-alloy skin plates stiffened by stringers. The leading-edge has a preformed skin flush riveted to profiled ribs along its length with a closing diaphragm at each end; it is attached to the torsion box by countersunk-headed bolts along each side of the front spar. The fin-tip fairing is a glass fibre moulding; it is attached to the torsion box top rib by countersunk-headed bolts along each side (FIG 12 Detail G) The fin radomes are of sandwich construction, the outer and inner skins being glasscloth, the inner core being a glasscloth honeycomb structure.

Three access panels are fitted in the fin skin plates, on the port side. The top panel (217) is located between Ribs 8 and 9 and gives access to an aerial matching unit and its feeder cable connections. The centre panel (215) is located between Ribs 5 and 6 and gives access to a navigation compass detector and its supply cable connection. The lower panel (211) is located between forward Ribs 2 and 3; this aircraft does not have equipment fitted in this position.

A hydraulic rudder damper unit is bolted to the fin structure in a cut-out aft of the rear spar between Ribs 7 and 8. The damper unit is a simple vane-type hydraulic shock absorber. The damper is filled with oil and movement of the centre shaft, connected to a bracket and bearing plate on the rudder by a link bar, moves the shaft-vanes towards fixed vanes on the inside of the damper casing. The movement of the shaft-vanes is resisted by the trapped oil which can escape only through restricted orifices in the shaft-vanes.

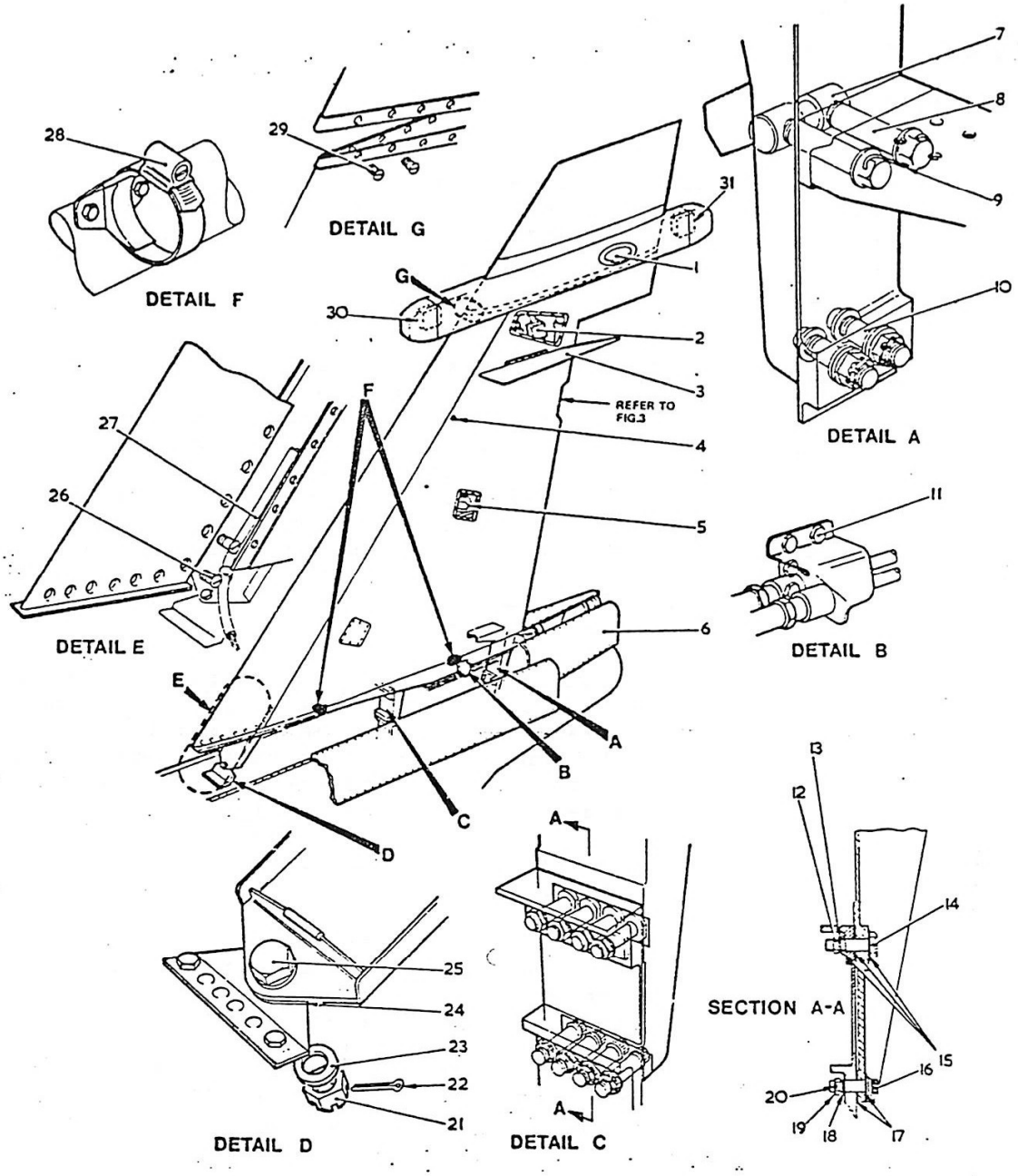

1 NAVIGATION LIGHT
2 AERIAL MATCHING UNIT
3 I.L.S. AERIAL
4 SLINGING POINT
5 COMPASS DETECTOR
6 SPINE FAIRING PANELS
7 NUT. SPECIAL
8 BOLT. SPECIAL
9 LOCKING WIRE
10 BOLT
11 BOLT
12 NUT
13 WASHER
14 BOLT. SPECIAL
15 PACKING PIECE
16 BOLT
17 PACKING PIECE
18 WASHER
19 NUT. SLOTTED
20 SPLIT PIN
21 NUT. SLOTTED
22 SPLIT PIN
23 WASHER, PLAIN
24 PACKING PIECE
25 BOLT
26 BOLT
27 CABLE LOOM
28 VENT PIPE CLIPS
29 BOLT
30 FORWARD R.F. DETECTOR UNIT AND RADOME
31 AFT R.F. DETECTOR UNIT AND RADOME

FIG 12. FIN DETAILS.

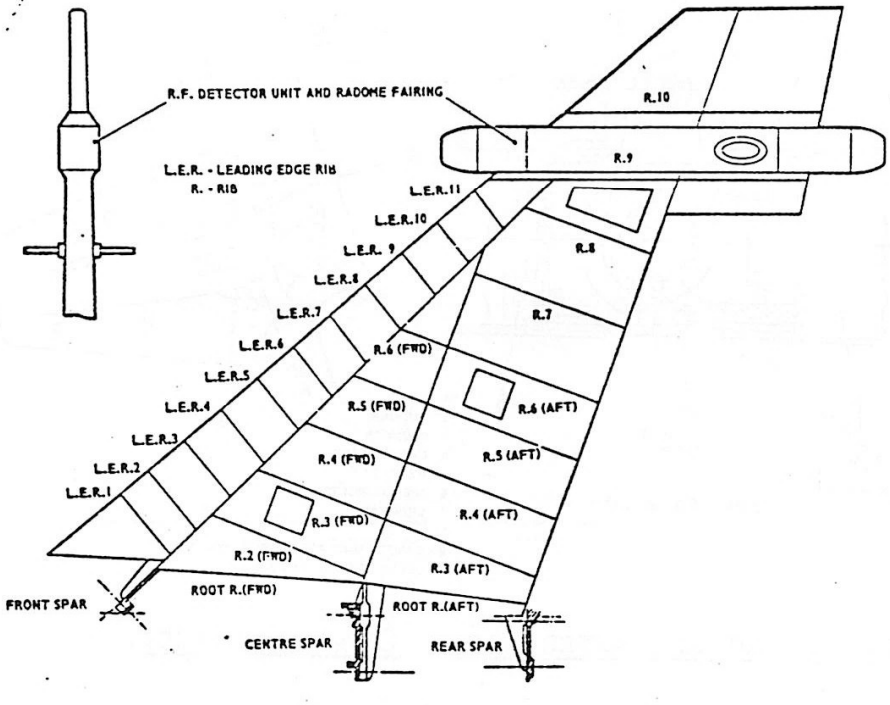

FIG. 13. FIN DETAILS.

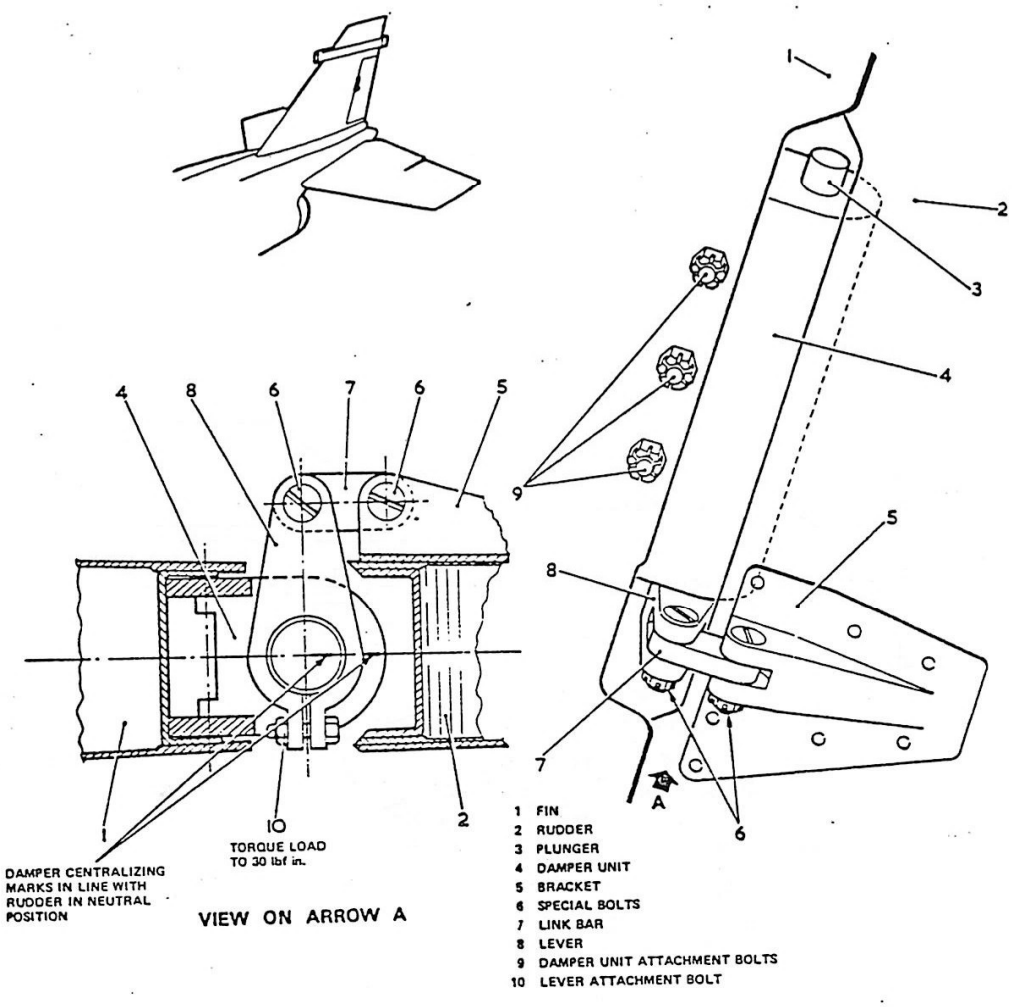

FIG. 14. RUDDER DAMPER UNIT. (Post Mod. 675).

4.4.2. Rudder.

The rudder structure is a bonded assembly comprising an aluminium honeycomb panel contained by a spar at the leading edge, a rib at the bottom, a rib plate at the top and a glass fibre block at the trailing edge, the whole covered by an aluminium alloy skin. The rudder is hinged, about a line parallel to the leading-edge spar, at three attachment points(FIG 15). Rudder movement is by a lever fitted adjacent to the lower hinge.

Post Mod 675. the rudder is attached to a rudder damper unit. (FIG 14).

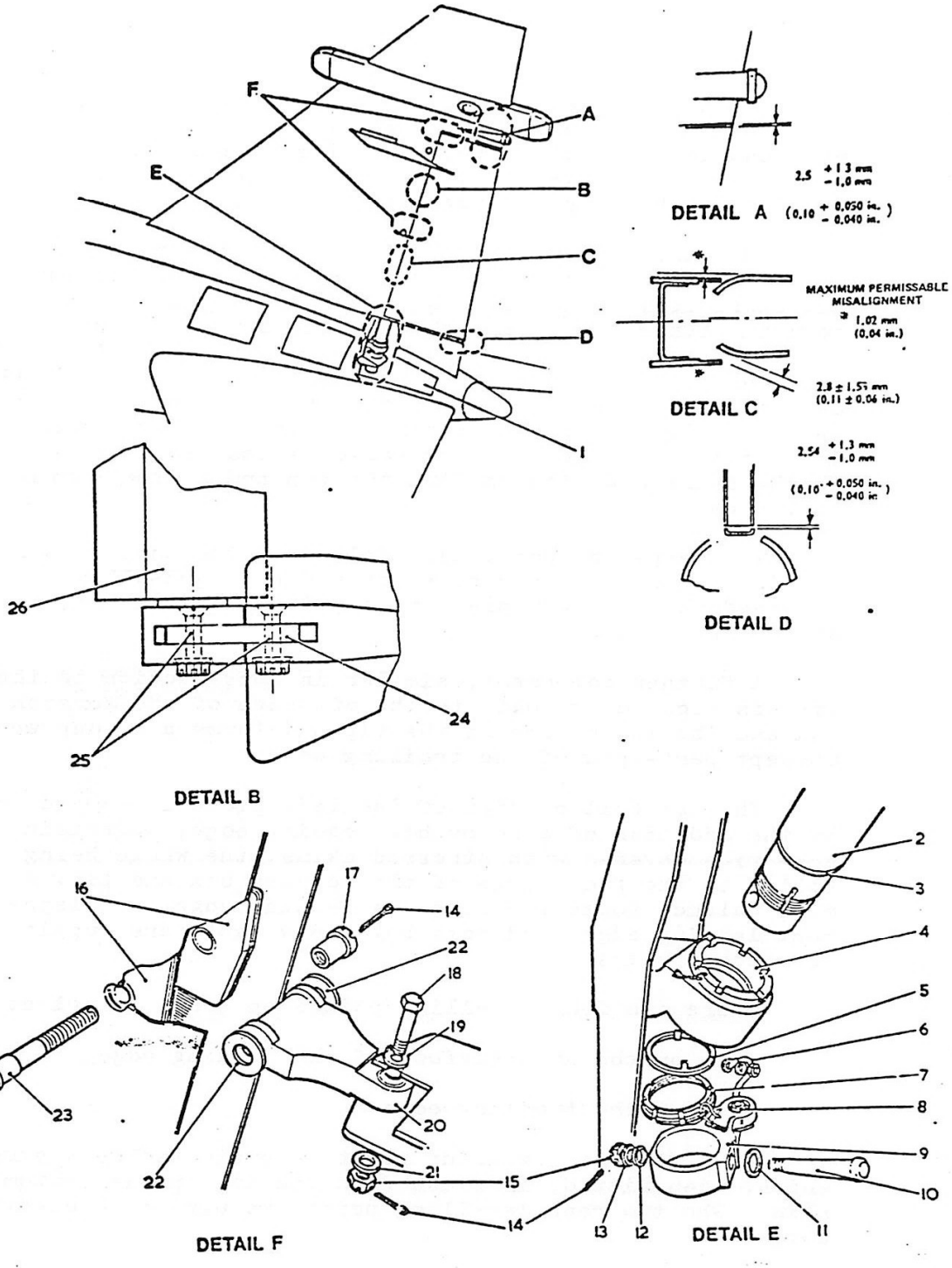

1 ACCESS PANEL
2 RUDDER PINTLE
3 SPECIAL WASHER
4 SPHERICAL BEARING LOCKNUT
5 LOCKING WASHER
6 BONDING STRIP
7 LOCKNUT
8 SPHERICAL BEARINGS
9 OPERATING LEVER
10 TAPER PIN
11 WASHER SPECIAL
12 WASHER
13 WASHER
14 SPLIT PIN
15 SLOTTED NUT
16 FIN BRACKET
17 NUT
18 HINGE BOLT
19 TAB WASHER
20 ATTACHMENT LINK
21 WASHER
22 LAMINATED SHIMS
23 ATTACHMENT BOLT
24 LINK BAR
25 SPECIAL BOLTS
26 DAMPER UNIT

FIG 15. RUDDER REMOVAL AND INSTALLATION.

4.4.3. Tailplane.

The tail plane consists of two separate components mounted one on each side of the rear fuselage. There is no mechanical linkage between the components, each being moved by its associated powered flying control unit pivoting in bearing housings at Frame 38.

The structure of each tail plane is based on a torsion box and three tranverse spars, the forward and aft spars forming the fore and aft boundaries of the box; the centre spar runs through the box and carries the tail plane spigot. Seven longitudinal ribs complete the structure of the torsion box, forming the lateral boundaries whilst at Rib 5 the slinging point passes through the tail plane. Screwed blanking plugs seal the slinging point. Heavy gauge light-alloy skins are secured to the spars and ribs to form the top and bottom surfaces of the box.

The large trapezoid tip, bolted to the torsion box, consists of a honeycomb core covered by light-alloy stressed skins, the whole tapering to a minimal thickness at the trailing edge.

A further component, similar in construction to the tip, is secured by bolts to the aft edge of the torsion box and the inner edge of the tip and forms a $2\frac{1}{2}$ degree upswept part-span of the trailing edge.

The aerofoil section of the tail plane is completed by the addition of a removable leading edge, comprising nose ribs covered with stressed skins, the whole being bolted to the front edge of the torsion box and tip. A mass balance forms the outboard leading edge. Replacement leading edges and mass balance weights are supplied as matched pairs.

There are four levelling points on each tail plane:-

-two on the undersurface of the leading edge

-two on the trailing edge.

Each forward levelling point is protected by a screw which, when fitted, is flush with the tail plane bottom skin. The two rear levelling points require no protective cover.

To make provision for the attachment of tail plane incidence gauge pointers, two jig located countersunk holes (5) are drilled through the torsion box upper skin of the tail planes at the inboard ends of the forward and aft spars. Anchor nuts are rivetted in line with the holes. The holes are fitted with countersunk-headed bolts when not in use.

4.4.3. (contd).

Each tail plane has a spigot which rotates in a tail plane spigot bearing housing which is fitted in the rear fuselage. A slot in the housing allows for movement of the tail plane actuating lever which is bolted to the spigot. The spigot bearing housing contains two bearings, inner and outer, of different diameters. The inner bearing is a P.T.F.E. lined, self-aligning spherical bearing; the outer bearing is of the needle roller type. The inner race of the outer bearing is fitted to the tail plane spigot and the outer race, including the rollers, is fitted to the bearing housing, both being interference fits. Both bearings are locked in position by washers and special nuts. A spacer and lip seal are fitted outboard of the outer bearing. A cover is provided for access to the outer bearing grease nipple.

The tail plane spigot consists of a tapered, steel shaft at one end of which a pair of drilled plates are welded; the plates are bolted to the centre spar of the tail plane assembly. Two close-tolerance surfaces are machined on the spigot to match the bearings. The connection for fitting the tail plane actuating lever is formed by two flat surfaces, the top and bottom of the spigot. A bushed hole through the spigot accommodates the actuating lever bolt.

The actuating lever is fitted after the tail plane is assembled to the fuselage. The lever is a machined casting having three contact surfaces with the tail-plane spigot. Two of the contact surfaces mate with the top and bottom of the spigot, the third, with a hole in the side of the spigot which accommodates an anti-rotation bolt fitted through the actuating lever. The fork end of the lever is connected to the power flying control unit.

1 FRONT SPAR
2 SLINGING POINT
3 CENTRE SPAR
4 LEVELING POINTS
5 ATTACHMENT POINTS FOR INCIDENCE POINTER
6 SPIGOT
7 TORISON BOX
8 REAR SPAR
9 TRAILING EDGE
10 TIP
11 LEADING EDGE MASS BALANCE
12 LEADING EDGE

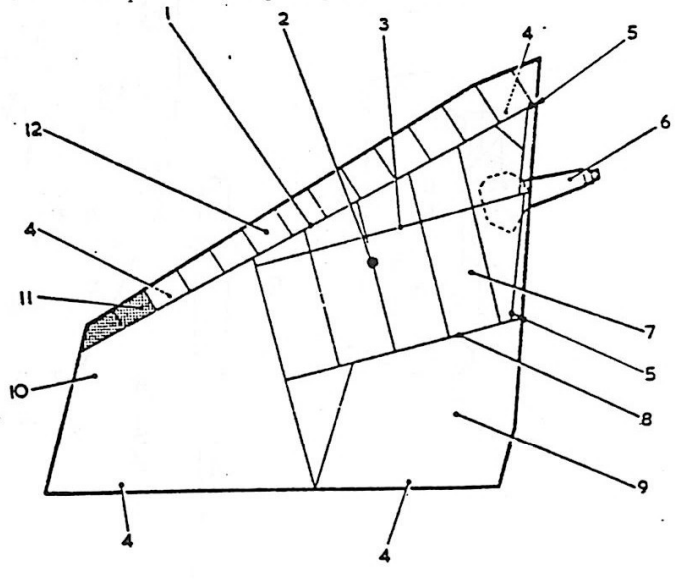

FIG.16. TAIL PLANE KEY DIAGRAM.

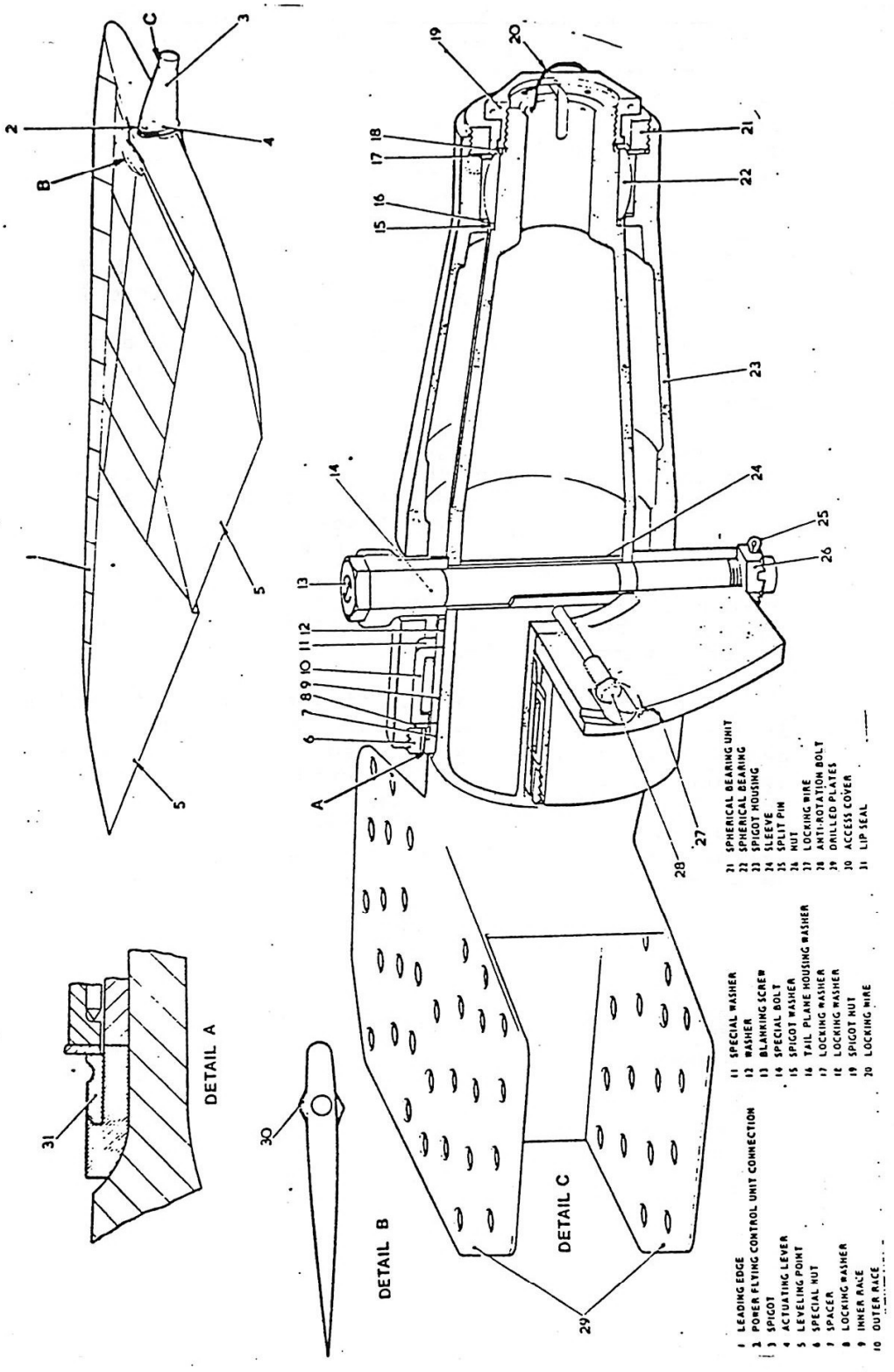

FIG 17. TAIL PLANE.

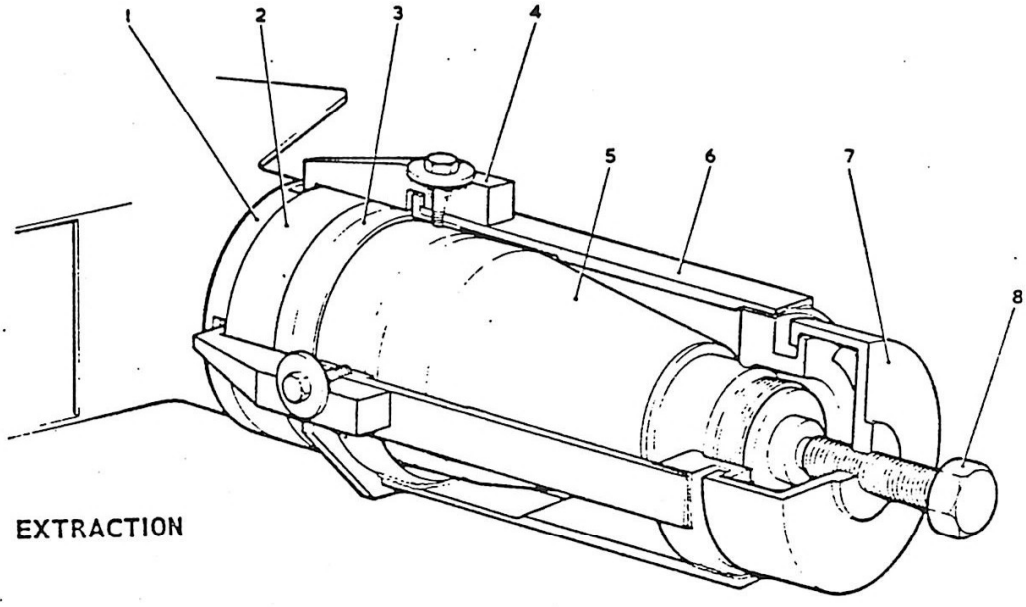

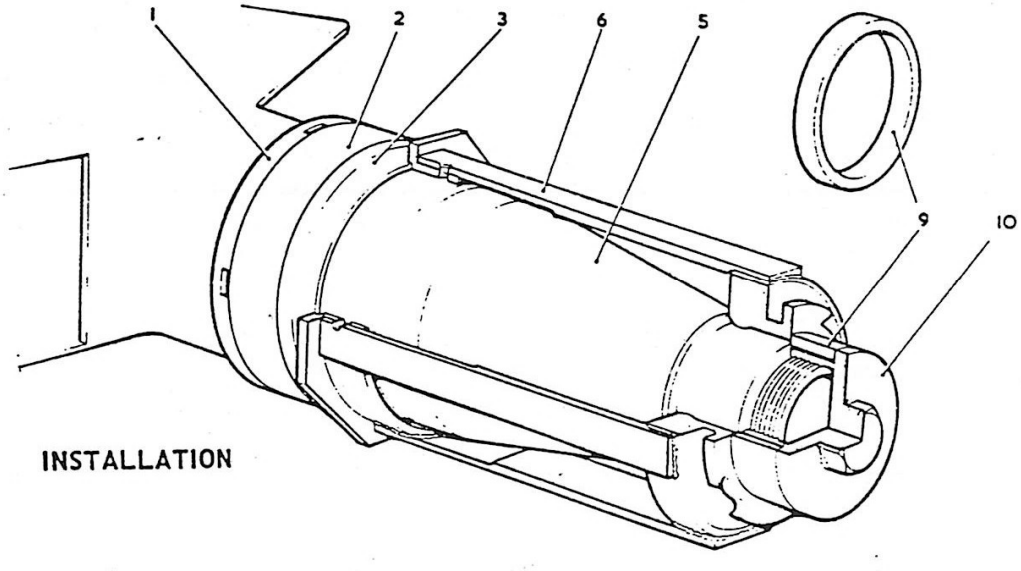

1	SPACER	6	BODY
2	INNER RACE	7	EXTRACTOR COLLAR
3	WASHER	8	EXTRACTOR BOLT
4	CLAW	9	DISTANCE PIECE
5	SPIGOT	10	SPECIAL NUT

FIG 18. EXTRACTION/INSTALLATION OF BEARING INNER RACE.

CHAPTER 3.

STRUCTURES.

CONTENTS

6. MAINPLANES.
6.1. INTRODUCTION.
6.2. STRUCTURES.
6.2.1. TORSION BOX.
6.2.2. SPARS.
6.2.3. RIBS.
6.2.4. MAINPLANE LEADING EDGE.
6.2.5. MAINPLANE TRAILING EDGE.
6.2.6. MAINPLANE TIP.
6.2.7. ACCESS PANELS.
6.2.8. SKINS.

6.3. MAINPLANE ATTACHMENT POINTS.
6.3.1. MAINPLANE TO FUSELAGE.
6.3.2. FORWARD ATTACHMENT POINTS.
6.3.3. CENTRE ATTACHMENT POINTS.
6.3.4. REAR ATTACHMENT POINTS.
6.3.5. SECONDARY ATTACHMENT POINTS.
6.3.6. SPINE LANDING ANGLES.

6.4. JACKING POINTS.

6.5. LEVELLING POINTS.

6.6. PYLON ATTACHMENT POINTS.

6.7. FLYING CONTROL ATTACHMENT.
6.7.1. SLATS.
6.7.2. FLAPS.
6.7.3. SPOILERS.

6.8. MAINPLANE SLINGING.

6.9. MAINPLANE ACCESS PANELS IN TORSION BOX.

CHAPTER 3.

ILLUSTRATIONS.

FIG.12. MAINPLANE.
FIG.13. ACCESS PANELS.
FIG.14. JOINT AT CENTRE RIB.
FIG.15. PICK UP POINTS.
FIG.16. LEADING EDGE PANELS.
FIG.17. SPINE LANDING ANGLES.
FIG.18. MAIN PLANE INVERTED PLAN.
FIG.19. PYLON AND YAW SPIGOT HOUSING.
FIG.20. MAINPLANE AND MOVING PARTS.
FIG.21. CONSTRUCTION OF SLAT.
FIG.22. ATTACHMENT OF SLAT TO MAINPLANE.
FIG.23. ATTACHMENT OF FLAP TO MAINPLANE.
FIG.24. ATTACHMENT OF SPOILER TO MAINPLANE.
FIG.25. FITTING SLING.
FIG.26. JACKING BRACKETS.

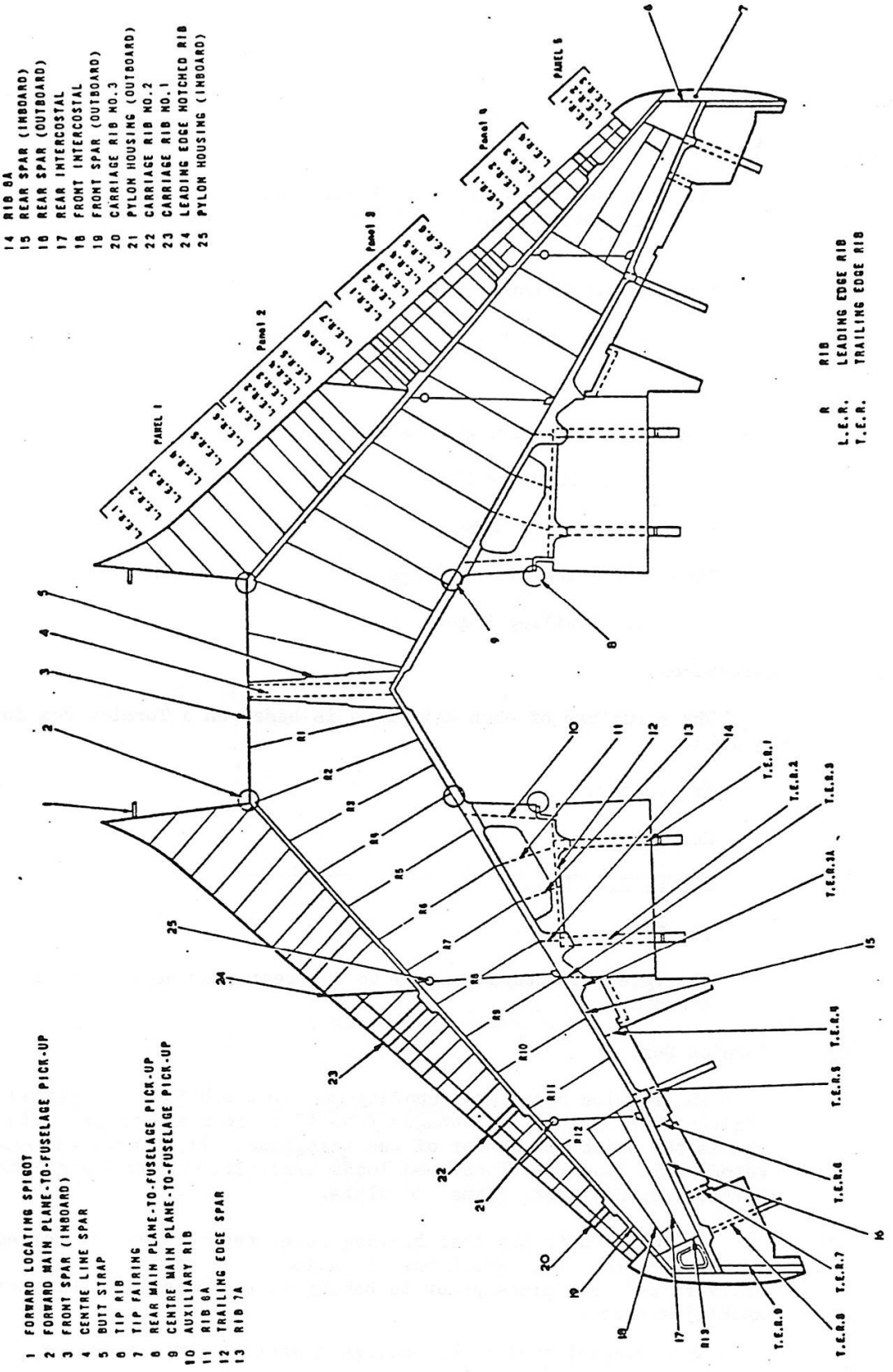

FIG. 12 MAINPLANE

6. MAINPLANES.

6.1. Introduction.

The mainplane is of the cantilever type and manufactured in sub component parts before final assembly. It has a sweep back of 40° and consists of:-

Port and Starboard halves.

Integral fuel tanks.

Slats.

Inboard and Outboard Spoilers.

Inboard and Outboard Flaps.

Removable Leading Edge.

Detachable Wing Tip Fairings.

Removable Trailing Edge.

6.2. Structures.

The structure of each mainplane is based on a Torsion Box formed by the:-

Front Spar.

Rear Spar.

Centre Line Rib.

Tip Rib.

Outrigger Structure secured to the rear spar between ribs 4 and 8.

6.2.1. Torsion Box.

The torsion boxes are manufactured from DTD 5020 and joined together during the final stage of build to form a complete mainplane, and is the principle member of the mainplane. It absorbs the main aerodynamic loads and localised loads transmitted from the moving parts, i.e. spoilers, flaps and slats.

In addition to its load bearing role, the torsion box serves as an integral fuel tank which has installed fuel and air system delivery and vent pipes, prior to having to top mainplane skin permanently secured.

The integral fuel tanks undergo a sealing process, using

6.2.1. (contd)
P.R.C. 1400 series sealants to ensure no leakage of fuel from the torsion box area on final assembly.

The joining together of the Port and Starboard mainplane torsion box assemblies is at the centre line rib. At this rib the two upper and lower skins form butt joints, the two inboard rear spars and front inboard spars also join together at this junction onto the centre line rib.

6.2.2. Spars.

The main spars are manufactured from light alloy girder machined from the solid whose flanges are drilled to accept the fastners used in securing the mainplane top and bottom skins. The inboard ends of the front spars at Rib 2, carry the mainplane to Fuselage attachment brackets and the rear spar attachment brackets are located on Rib.4. The inboard section of the Front Spar from Rib.2. to the centre line rib is a composite light alloy structure.

6.2.3. Ribs.

The centre line rib is a H section light alloy, machined to shape and forms a fuel tight barrier isolating the Port and Starboard mainplane integral fuel tanks. This rib is one of the major components used for joining together the Port and Starboard torsion boxes.

The main ribs are numbered 1-13 from the centre line rib outboard which covers the span of the mainplane. Attached to the Tip Rib is a detachable wing tip fairing.

6.2.4. Mainplane Leading Edge.

The L/E consists of five large removable panels, three carriage ribs, which carry the slat tracks and two rib plug breaks which are quick release points for electrical services to the pylons.

Each of the five L/E panels are made up of nose ribs covered by light alloy stressed skins, the top edges of the skins fit under the mainplane skins when assembled to the front spar and are joggled to maintain a constant skin contour.

The panels are numbered 1 to 5, No.1. panel being the inboard panel.

6.2.5. Mainplane Trailing Edge.

The trailing edge structure is made up of ribs, intercostals and skins with integral stiffeners which are attached to the upper face of the trailing edge spar, which is attached to the rear face of the mainplane rear spar.

Flaps, Spoilers and their controls from the fuselage are housed in the trailing edge.

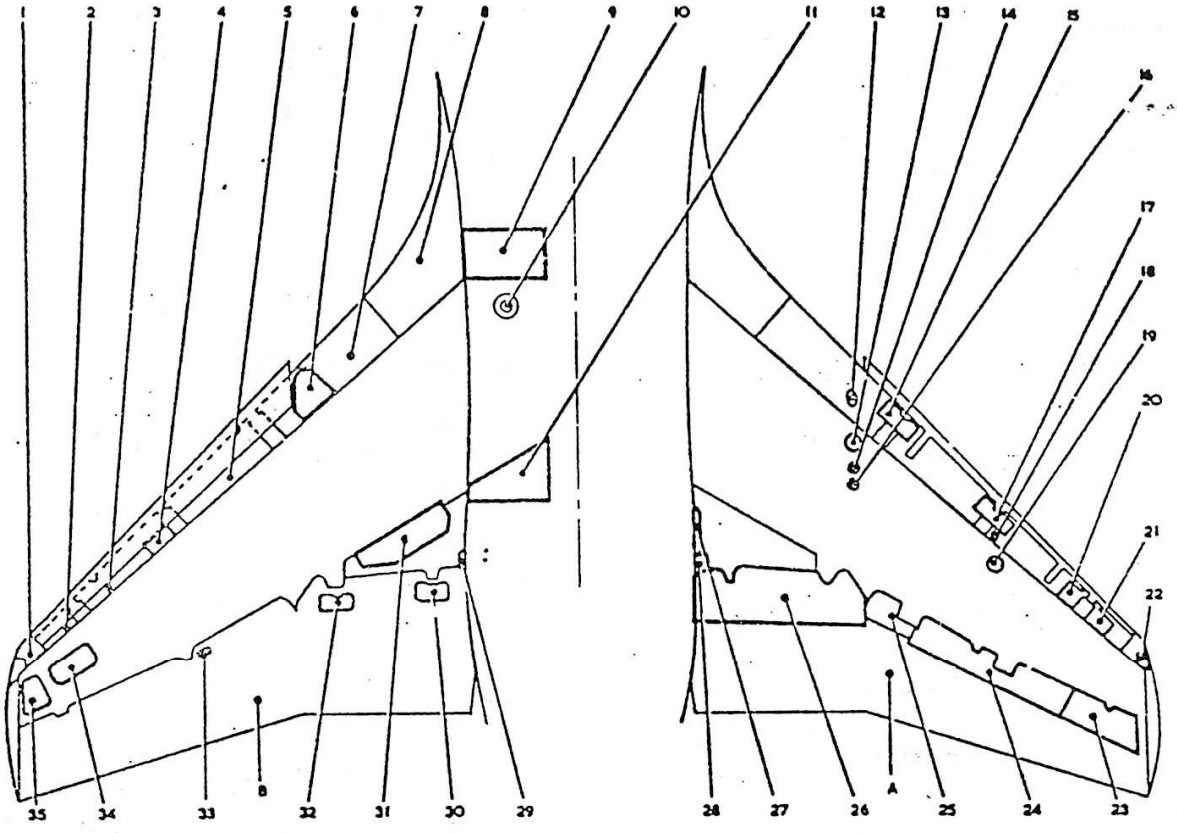

PLAN VIEW INVERTED PLAN VIEW

1 NAVIGATION LIGHT PANEL
2 LEADING EDGE PANEL NO.5:-
SLAT POSITION TRANSMITTER
3 LEADING EDGE PANEL NO.4:-
SLAT DRIVE CONTROL ROD CONNECTIONS.
SLAT DRIVE BEARING PEDESTAL
4 PYLON ELECTRICS (OUTBOARD)
5 LEADING EDGE PANEL NO.3:-
SLAT DRIVE CONTROL ROD CONNECTIONS.
SLAT DRIVE BEARING PEDESTAL
6 PYLON ELECTRICS (INBOARD)
7 LEADING EDGE PANEL NO 2:-
SLAT DRIVE CONTROL ROD CONNECTIONS.
SLAT DRIVE BEARING PEDESTAL
8 LEADING EDGE PANEL NO.1.-
SLAT DRIVE CONTROL RODS. SPIGOTS
9 SLAT DRIVE LIMITER. SLAT HYDRAULIC MOTOR.
WING TO FUSELAGE FUEL PIPE CONNECTIONS
AND HIGH-LEVEL FLOAT SWITCHES. FORWARD PICK-UP
10 GRAVITY REFUELLING FILLER CAP
11 ROLL TRIM ACTUATOR FLAP SLAT HYDRAULIC SELECTOR
VALVE. HYDRAULIC FLOW CONTROL VALVE.
CENTRE PICK-UP
12 PYLON ELECTRICS (INBOARD)
13 PYLON HOUSING
14 PYLON FUEL CONNECTION
15 ROLLER ADJUSTMENT AND GREASING POINT FOR
SLAT TRACK NO.1
16 PYLON AIR CONNECTION
17 ROLLER ADJUSTMENT AND GREASING POINT
FOR SLAT TRACK NO.2
18 PYLON ELECTRICS (OUTBOARD)
19 PYLON HOUSING
20 ROLLER ADJUSTMENT AND GREASING POINT
(INBOARD) FOR SLAT TRACK NO.3
21 ROLLER ADJUSTMENT AND GREASING POINT
(OUTBOARD) FOR SLAT TRACK NO 3
22 NAVIGATION LIGHT BULB
23 FLAP SCREW-JACK. CONTROL ROD CONNECTIONS.
24 FLAP SCREW JACK. CONTROL ROD CONNECTIONS
25 SPOILER HYDRAULIC JACK
26 FLAP SCREW-JACKS AND CONTROL ROD CONNECTIONS.
SPOILER HYDRAULIC JACK AND PIPE CONNECTIONS
27 BONDING SCREEN
28 REAR WING-TO-FUSELAGE PICK-UP
29 REAR WING-TO-FUSELAGE PICK-UP
30 SPOILER HYDRAULIC PIPE CONNECTIONS
31 SPOILER CONTROL RODS AND LEVERS
32 SPOILER HYDRAULIC PIPE CONNECTIONS
33 SPOILER MECHANISM
34 FUEL-NO-AIR VALVE. LOW-LEVEL FLOAT SWITCH
35 PORT UPPER SURFACE - WING TIP I.F.F. AERIAL
STARBOARD LOWER SURFACE - WING TIP TACAN AERIAL

FIG 13 ACESS PANELS

6.2.5. (contd)

The flaps and spoilers when retracted form part of the mainplane lower and upper surfaces respectively, the former being completed by four panels and the latter by three panels with stiffeners and intercostals.

6.2.6. Mainplane Tip.

The mainplane tip fairing is a moulded glass fibre component secured to the mainplane by screws, at the rear end of the tip fairing is a spigot which locates in a housing attached to the tip rib and at the forward end is a pre formed landing for the navigation light fairing which completes the profile of both the mainplane tip and the leading edge.

6.2.7. Access Panels.

The location of access panels in the mainplane and the equipment to which they give access is given on Page with its key.

6.2.8. Skins.

The skins covering the upper and lower surfaces of the torsion boxes are of light alloy and machined so as to have integral stiffeners and local strong points, the latter being used as mountings for various items of equipment.

6.3. Mainplane Attachment Points.

6.3.1. Mainplane to Fuselage Attachment Points.

The M/P is attached to the fuselage at 8 points, 4 on each side of the fuselage.

The 6 main attachment points are the Forward, Centre and Rear attachment brackets on the Port and Starboard side of the mainplane with a secondary attachment bracket located inside No.1. Leading edge panel. The M/P fit on top of the fuselage in a recess formed between Frames 20 and 25.

6.3.2. Forward Attachment Point

Both forward attachment points are connected to the front spar and secured to the fuselage by two links, each link transmits vertical loads only. Movement in other directions is taken up by spherical bearings in the mainplane and fuselage bracket lugs.

6.3.3. Centre Attachment Point.

The centre attachment points are connected to the rear spar and secured to the fuselage by a bolt fitting through a fork end bracket and lug attached to the fuselage.

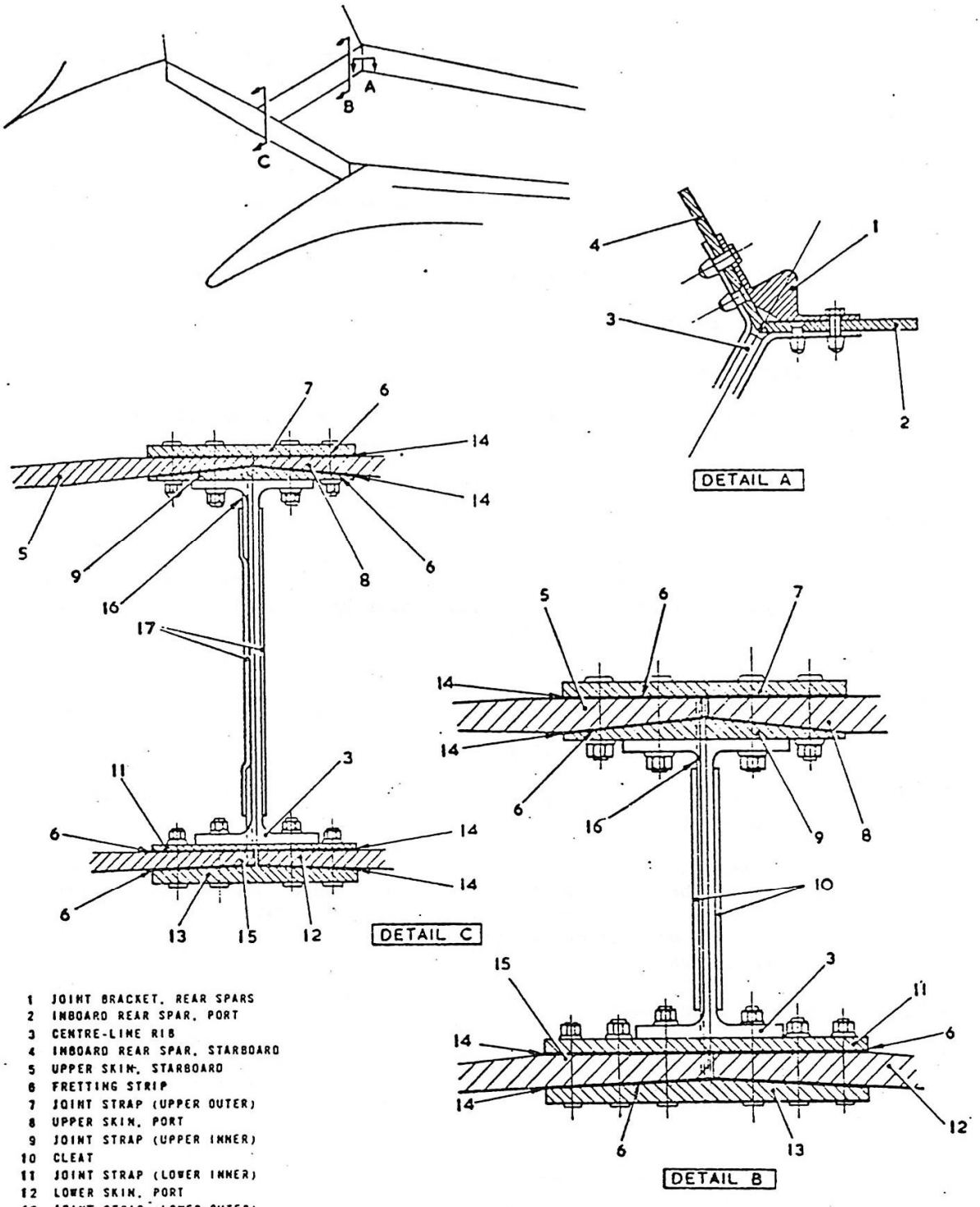

1 JOINT BRACKET, REAR SPARS
2 INBOARD REAR SPAR, PORT
3 CENTRE-LINE RIB
4 INBOARD REAR SPAR, STARBOARD
5 UPPER SKIN, STARBOARD
6 FRETTING STRIP
7 JOINT STRAP (UPPER OUTER)
8 UPPER SKIN, PORT
9 JOINT STRAP (UPPER INNER)
10 CLEAT
11 JOINT STRAP (LOWER INNER)
12 LOWER SKIN, PORT
13 JOINT STRAP (LOWER OUTER)
14 SEALANT
15 LOWER SKIN, STARBOARD
16 SEALING PLATE
17 CLEAT

FIG 14 JOINT AT CENTRE RIB

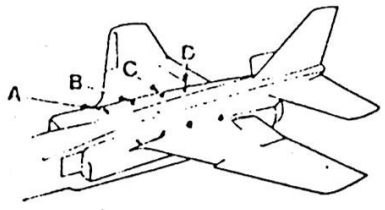

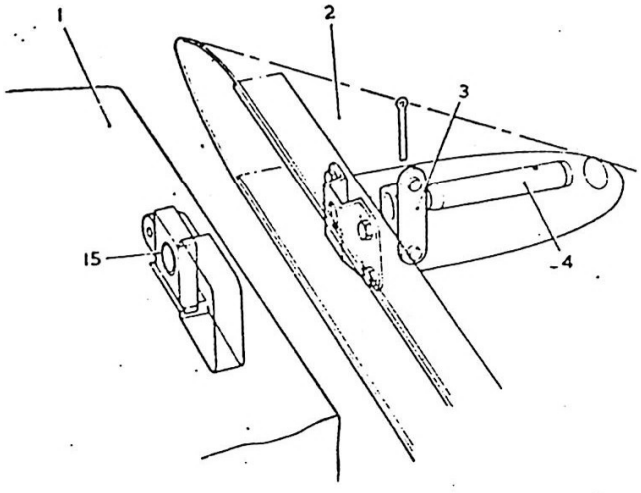

DETAIL A

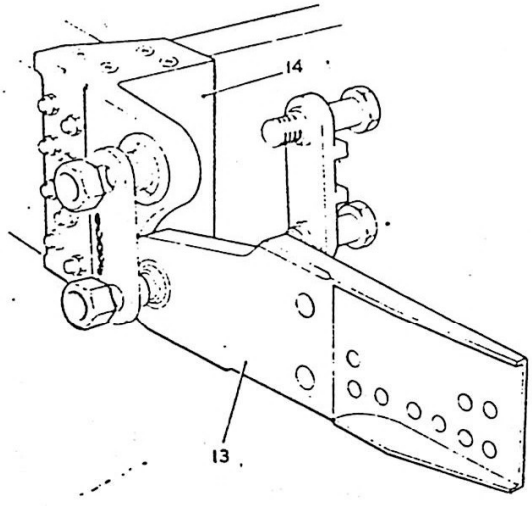

DETAIL D

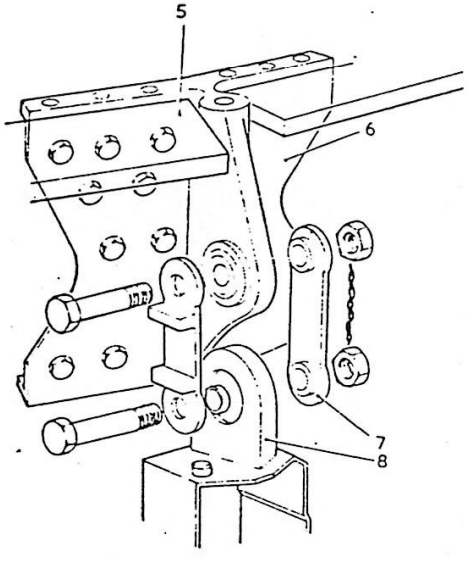

DETAIL B

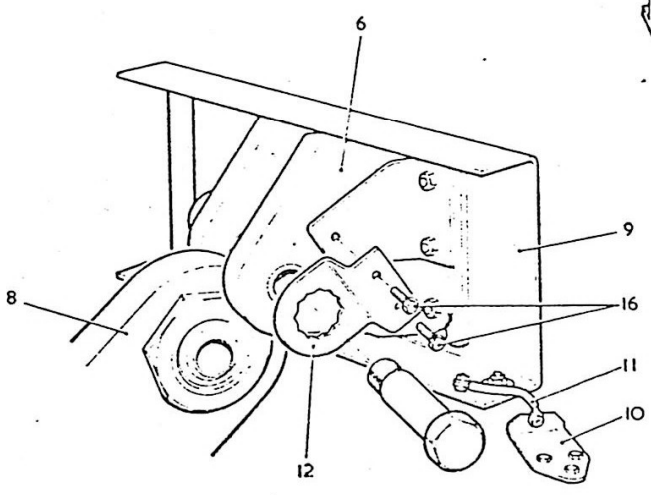

DETAIL C

1 FUSELAGE
2 LEADING EDGE PANEL NO.1
3 SPIGOT BLOCK
4 SPIGOT
5 FRONT SPAR
6 MAIN PLANE PICK-UP
7 LINK
8 FUSELAGE PICK UP
9 REAR SPAR
10 BONDING BRACKET
11 BONDING LEAD
12 LOCKING PLATE
13 FUSELAGE FITTING
14 MAIN PLANE REAR PICK-UP
15 SPIGOT HOUSING
16 TAB SECURING BOLTS

B.16-10.6-3

Fig.6. Pick-up points
◀ *(Mod.827 added)* ▶

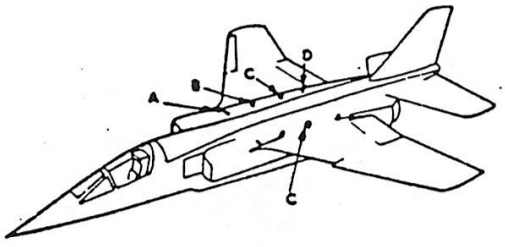

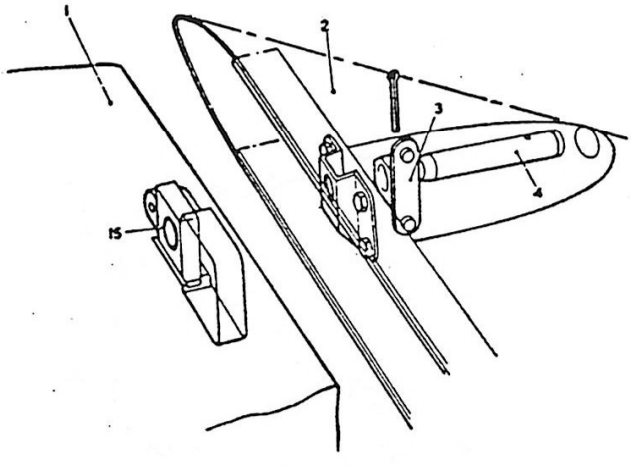

DETAIL A

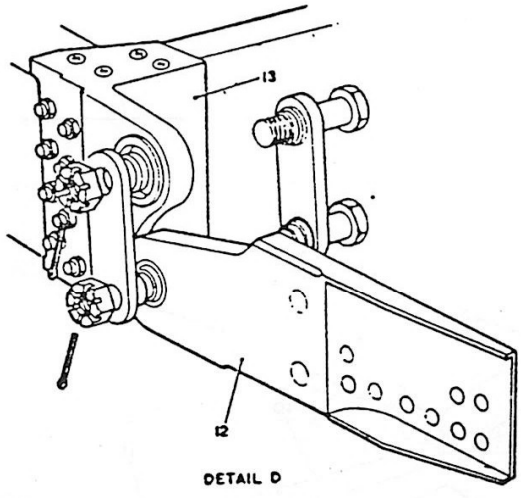

DETAIL D

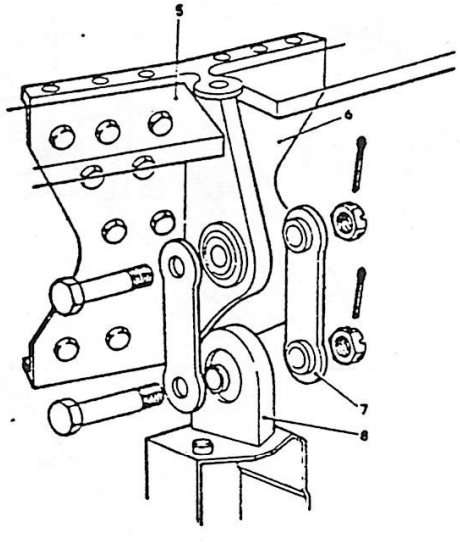

DETAIL B

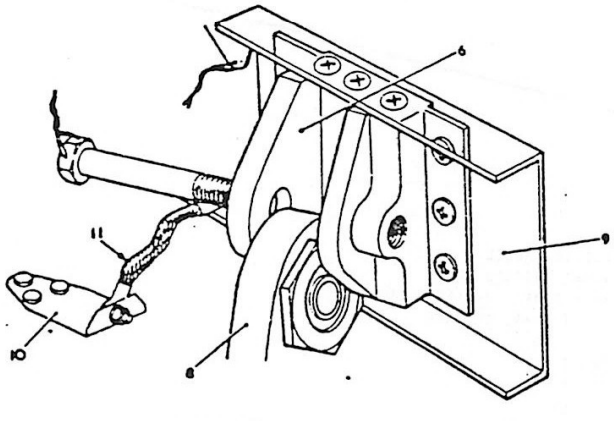

DETAIL C

1 FUSELAGE
2 LEADING EDGE PANEL NO.1
3 SPIGOT BLOCK
4 SPIGOT
5 FRONT SPAR
6 MAIN PLANE PICK-UP
7 LINK
8 FUSELAGE PICK-UP
9 REAR SPAR
10 BONDING BRACKET
11 BONDING LEAD
12 TRAILING EDGE SPAR
13 MAIN PLANE REAR PICK-UP
14 SPIGOT HOUSING

FIG 15 PICK UP POINTS

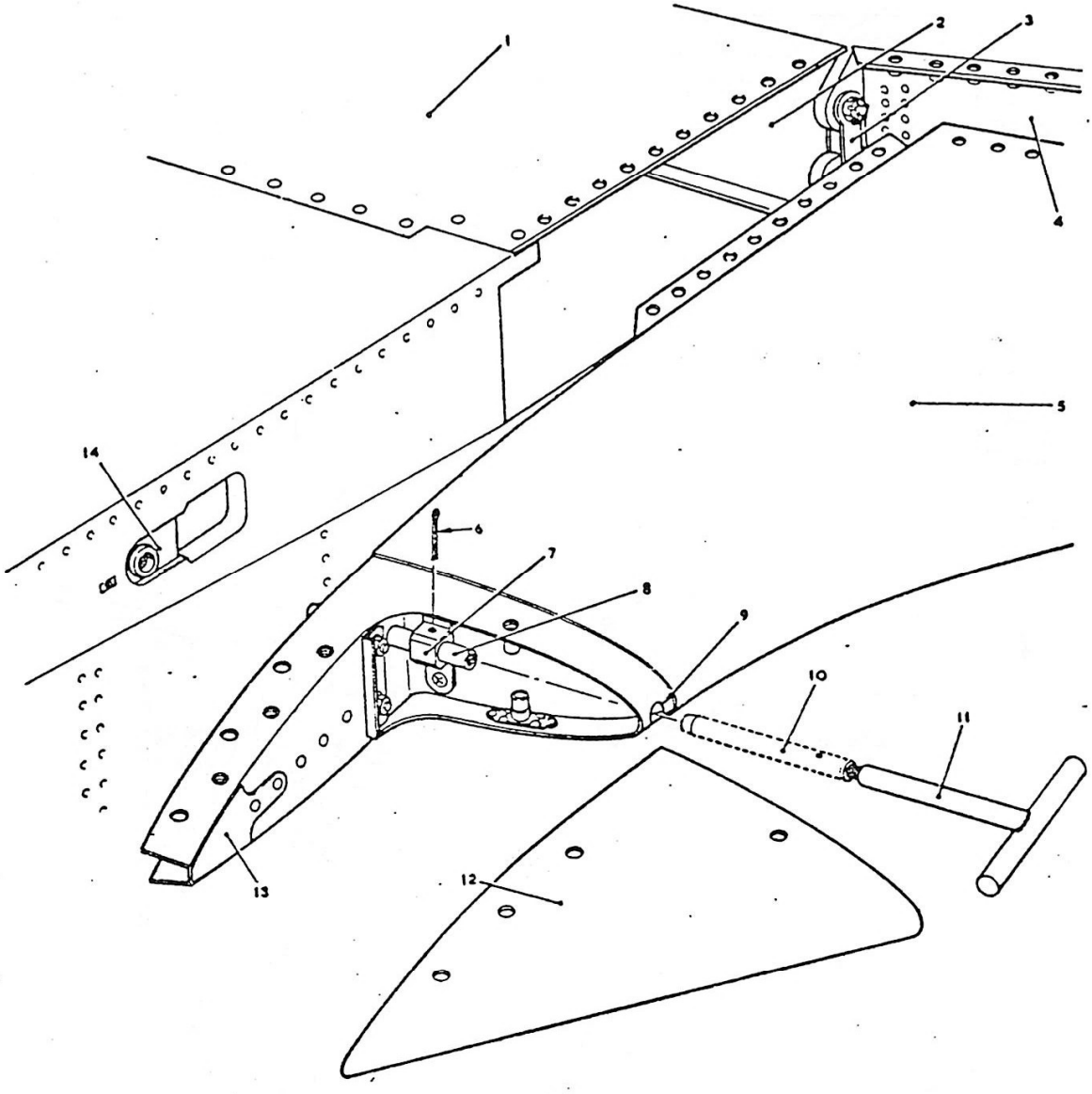

1 CLOSING PANEL
2 FRONT INBOARD SPAR
3 MAIN PLANE FORWARD PICK-UP
4 FRONT SPAR, INBOARD
5 PANEL NO.1
6 SPLIT PIN
7 BLOCK
8 SPIGOT
9 ACCESS HOLE
10 SPIGOT WITHDRAWN
11 EXTRACTOR
12 NOSE SKIN
13 NOSE RIB
14 SPIGOT HOUSING

FIG 16 LEADING EDGE PANELS

6.3.3. (contd)

The assemblies transmit both vertical and longitudinal loads, side loads are transmitted from the Port side only, associated angular movement being provided for by the spherical bearings in the Starboard assembly.

6.3.4. Rear Attachment Point.

Both rear attachment brackets are attached to the trailing edge spars and connected to the fuselage by two links which transmit vertical loads only.

6.3.5. Secondary Attachment Points.

The two secondary attachment points are in the form of spigots which pass through spigot blocks secured to the forward inboard face of the root rib in the leading edge panels (No.1. Panel). After passing through the spigot block the spigot enters a floating spherical bearing in the side of the fuselage.

6.3.6. Spine Landing Angles.

Attachment Points are provided for attaching the spine structure at the top of the Front and Rear spars.

6.4. Jacking Points.

The two jacking brackets are fitted to the rear spar adjacent to Rib.11. and are bolted to the lower skin of the Port and Starboard mainplanes. These brackets are internally threaded to accommodate picketing adaptors for picketing purposes and when not in use are fitted with blanking plugs.

6.5. Levelling Points.

There are six levelling points fitted to each Mainplane Lower Surface all outside the Mainplane Torsion Box and Fuel Tank boundaries. They are internally threaded to accept a BALL-PIN to which the levelling equipment is attached.

The Levelling Points are positioned as follows:-

Outboard Position

Two points on the TIP RIB outside of the Mainplane Rib 13 Forward and Rear Face.

Centre Position.

The Forward Levelling Point is located in the Leading Edge Panel No.3. with its Rear Position being adjacent to the Inboard Rear Spar at Rib.11.

Inboard Position.

The Forward Levelling Point is located in No.1. Leading Edge Panel and the Rear Position being adjacent to the intersection of the Rear Trailing Edge Spar and Auxiliary Spar.

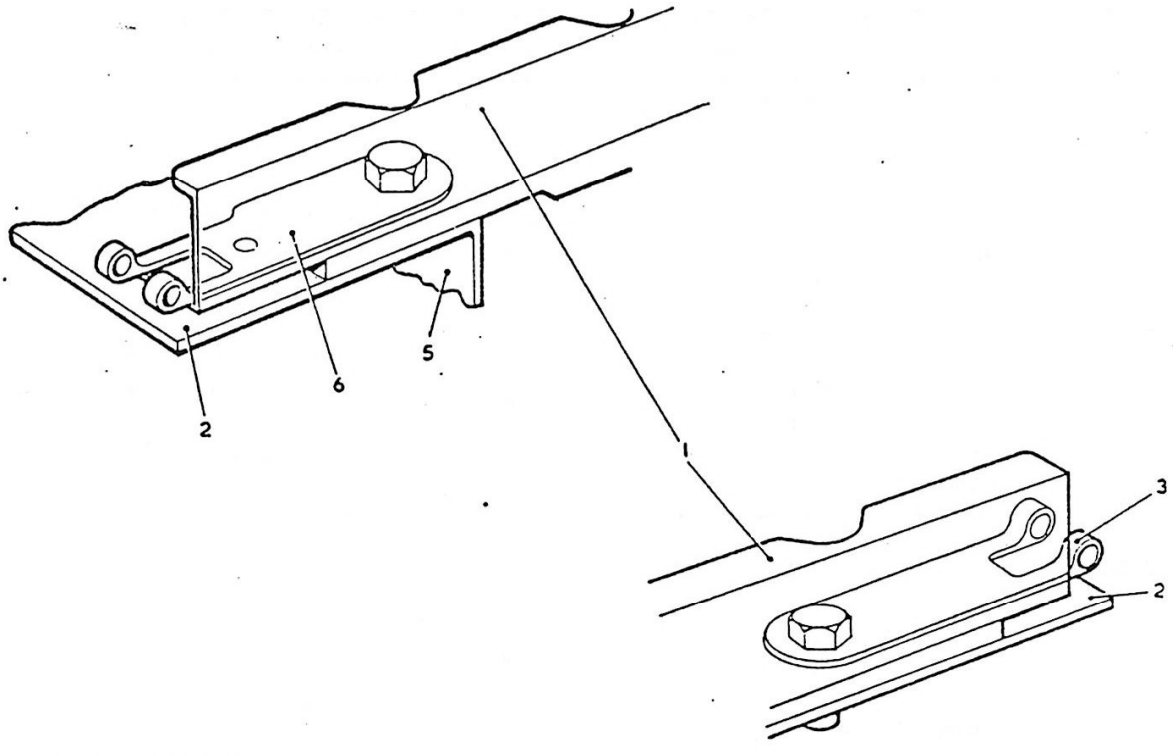

1 SPINE LANDING ANGLES
2 MAIN PLANE UPPER SKIN
3 FRONT HINGES
4 FRONT SPAR
5 REAR SPAR
6 REAR HINGES

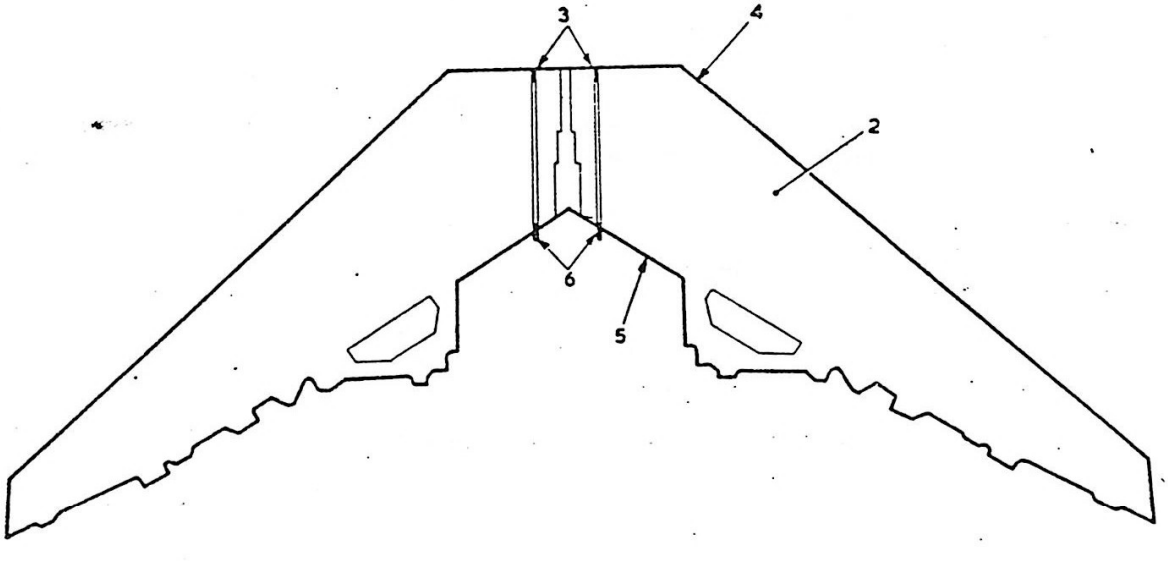

FIG 17 SPINE LANDING ANGLES

SECURITY

ALL INFORMATION CONTAINED IN THESE NOTES CARRIES A "RESTRICTED" SECURITY CLASSIFICATION.

THE RECEIPIENT WILL BE HELD RESPONSIBLE FOR THEIR SAFE CUSTODY AT ALL TIMES, HIS NAME HAVING BEEN ENTERED IN THE ISSUES REGISTER.

DO NOT REGARD THESE NOTES AS THE OFFICIAL AUTHORITY ON ANY SPECIFIC POINT.

REFERENCE MUST ALWAYS BE MADE TO THE RELEVANT AIR PUBLICATION.

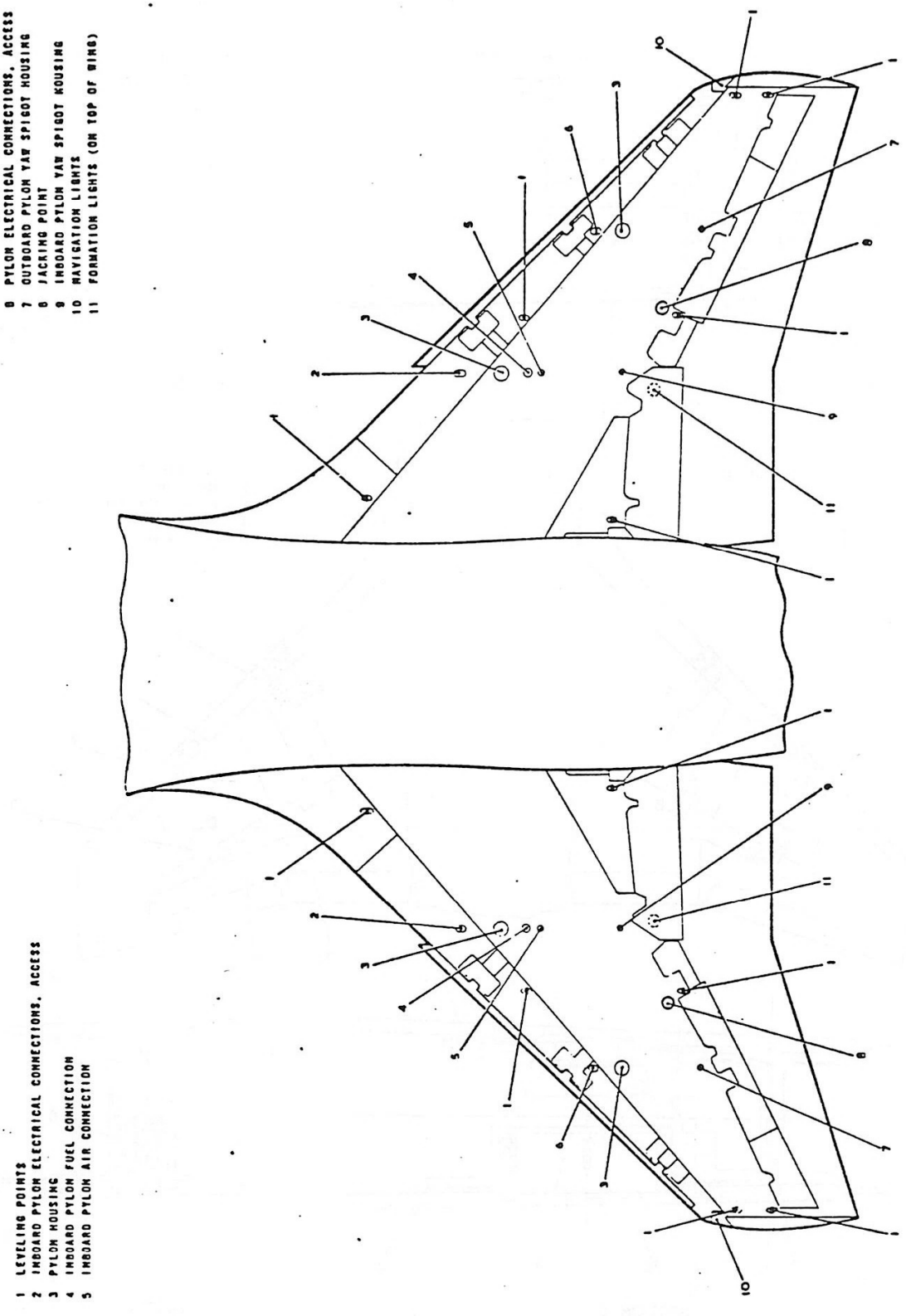

FIG 18 MAINPLANE INVERTED PLAN

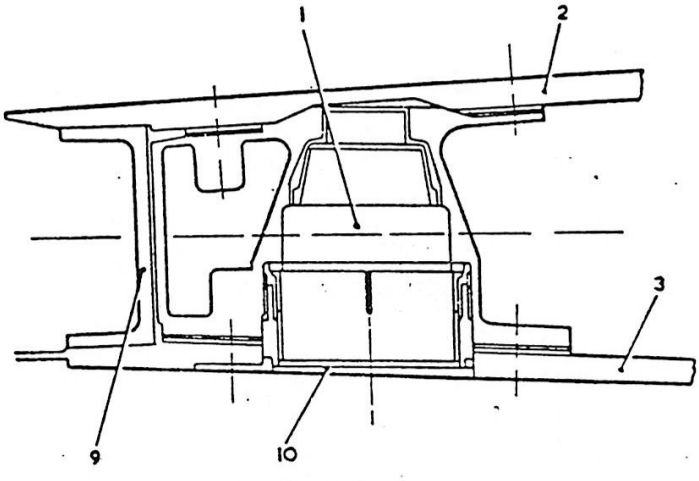

SECTION A-A

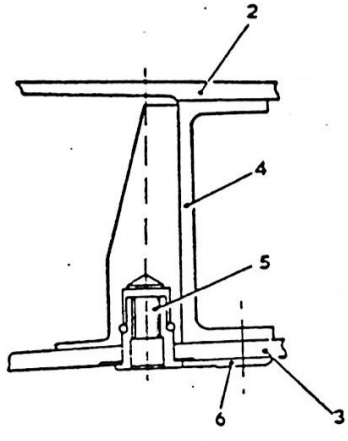

SECTION B-B

1 INBOARD PYLON HOUSING
2 MAIN PLANE UPPER SKIN
3 LOWER SKIN
4 REAR SPAR
5 INVERTED YAW SPIGOT HOUSING
6 LOCKING PLATE
7 FRONT SPAR
8 OUTBOARD YAW SPIGOT HOUSING
9 OUTBOARD PYLON HOUSING
10 BLANKING CAP

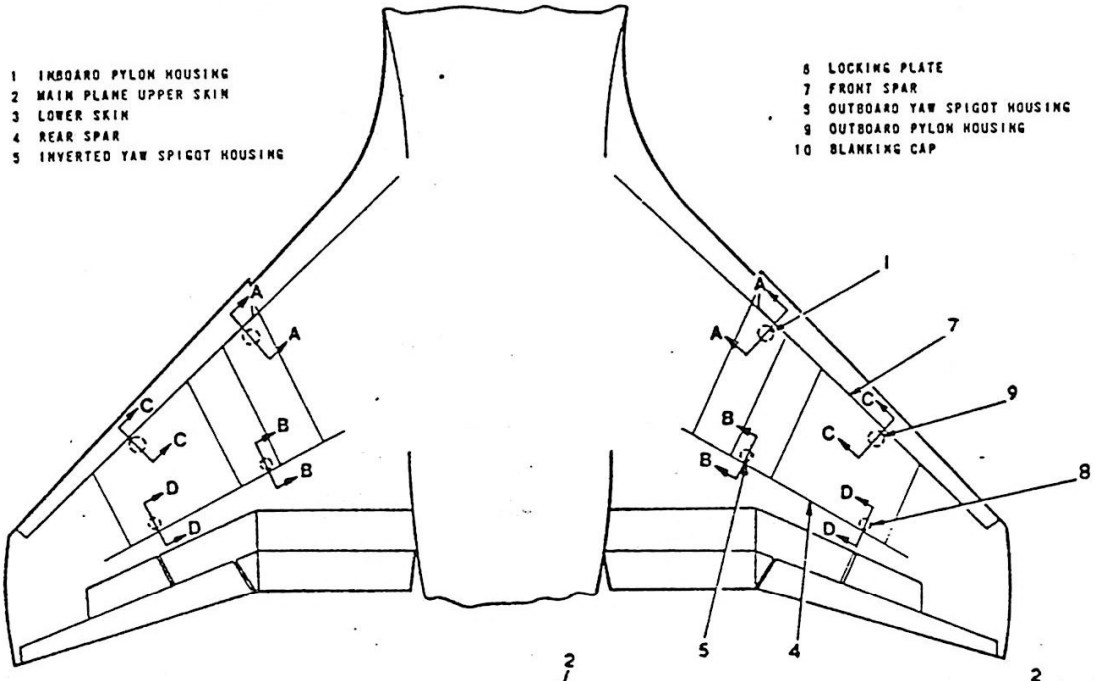

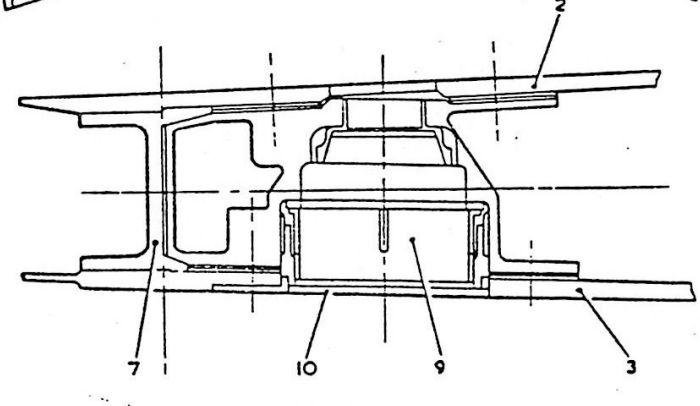

SECTION C-C

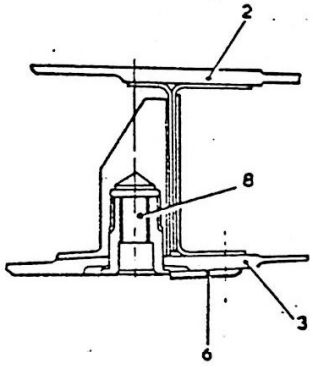

SECTION D-D

FIG 19 PYLON AND YAW SPIGOT HOUSING

6.6. Pylon Attachment Points.

External pylons can be carried on either Inboard or Outboard pylon stations, or, if required, on both.

The Inboard Attachment Housing, located between Ribs 7 and 8 adjacent to Leading Edge Panels 2 and 3 is secured to the Top and Bottom mainplane skins. It forms an open aperture sealed by blanking plates when not in use. The pylon aft steadying spigot which is known as a YAW SPIGOT, locates in a YAW SPIGOT Housing which is attached to the Rear Inboard Spar at Rib.9.

The Outboard Pylon Attachment Housing, similar in all respect to the inboard pylon attachment housing is located between Ribs 11 and 12, adjacent to No.4. Leading Edge Panel, which has its YAW SPIGOT housing located on the Rear Outboard Spar between Ribs 12 and 13.

6.7. Flying Controls Attachment Points.

6.7.1. Slats.

Each of the carriage ribs mounted on the front face of the front spar, adjacent to mainplane ribs 8 and 11 and between ribs 12 and 13 consists of double channeled light alloy machined forgings.

The ribs are numbered 1 to 3 commencing from inboard and carry on their inner face the rollers for its associated slat track. Small removable panels close the top and bottom gap of each assembly.

No.1. carriage rib houses six rollers, the front and rear pair (pin mounted) running on the inner faces of the top and bottom flanges of the slat track, and the centre pair (fork mounted) engage the web of the track.

No.2. and 3. carriage ribs have pin mounted rollers only for each assembly.

Roller Adjustments

All pin mounted rollers are adjusted by rotation of the eccentric pins on which they are mounted. The fork mounted rollers by adjustment of the shim washer fitted under the shoulder of the fork.

Roller Lubrication

Lubrication of the pin mounted rollers is via a grease nipple on the head of the eccentric pin. The fork mounted rollers run in self-lubricating bushes and do not require lubrication.

Slat Screw Jack Mountings

The two slat screw jack mounting brackets are secured to the front face of the front spar at points adjacent to Ribs 8 and 12. The brackets are U-section and fit into the torsion box. A fuel tight pocket accommodates the associated screw jack rod when the slats are fully retracted. Both the mountings

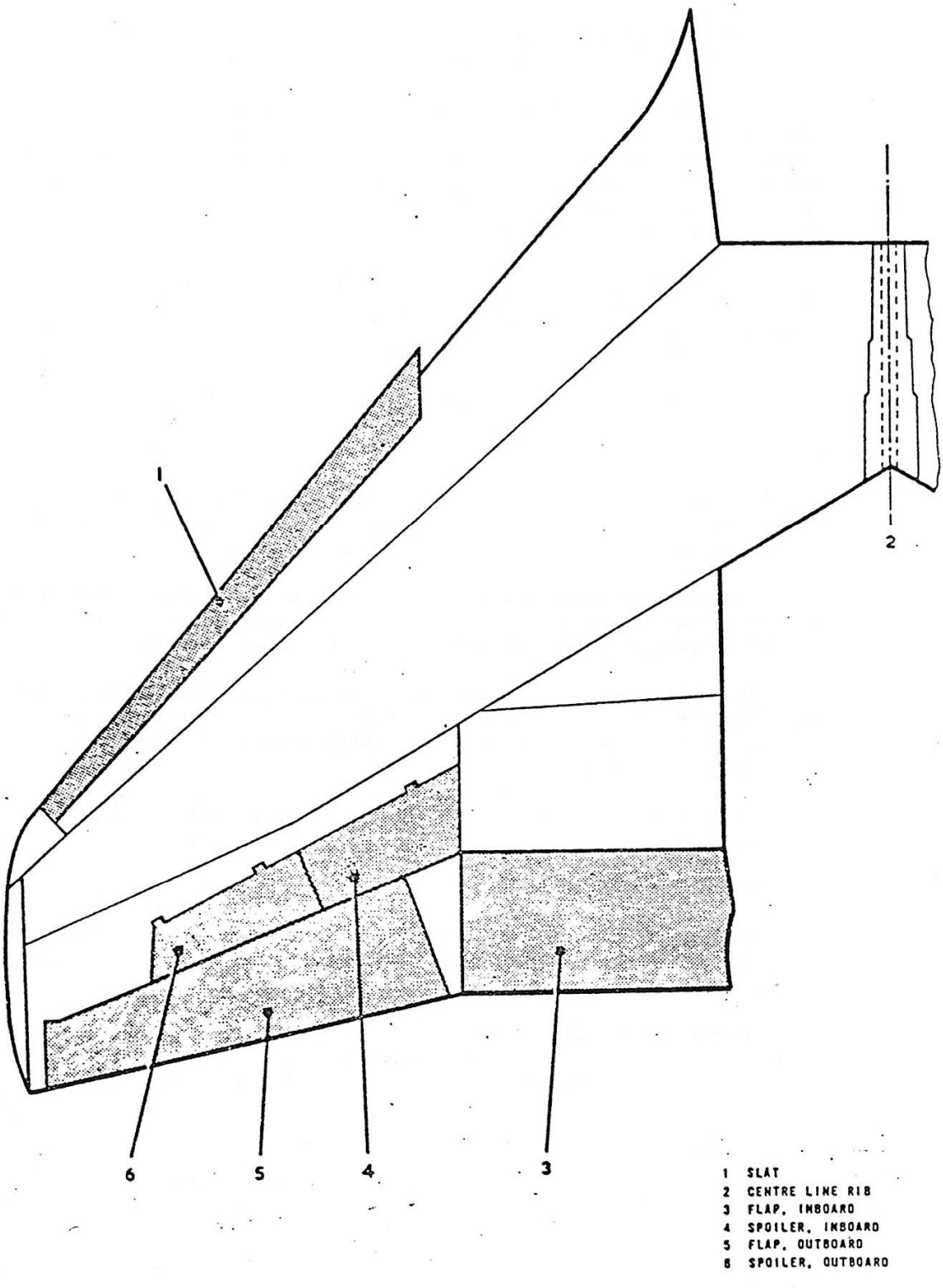

FIG 20 MAINPLANE AND MOVING PARTS

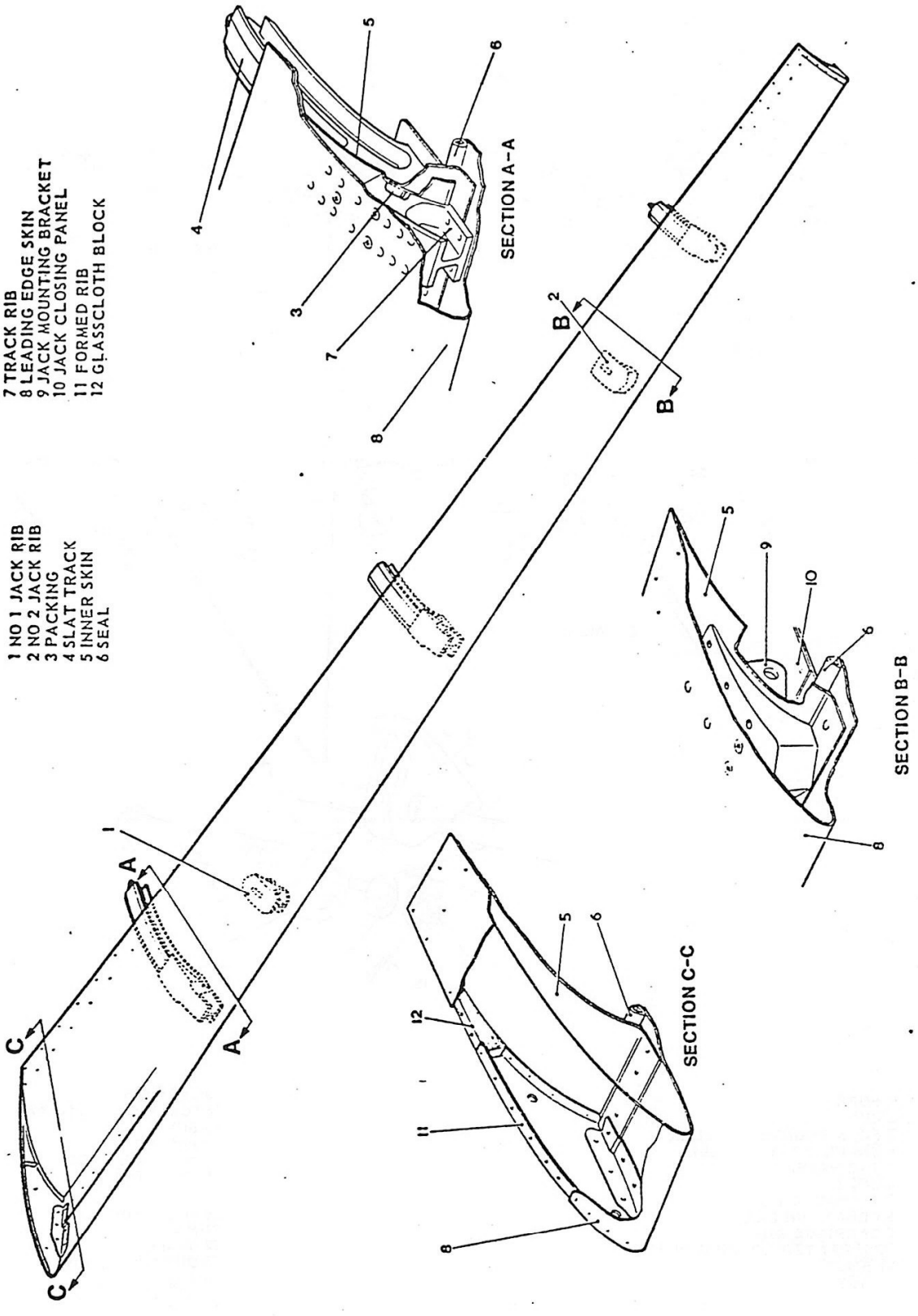

FIG 21 CONSTRUCTION OF SLAT

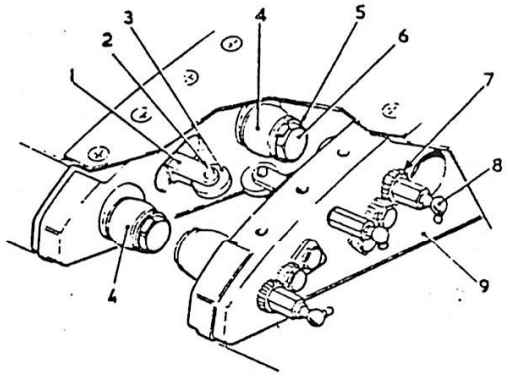

DETAIL A

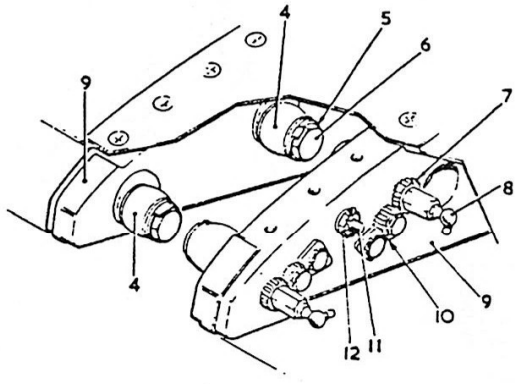

DETAIL B

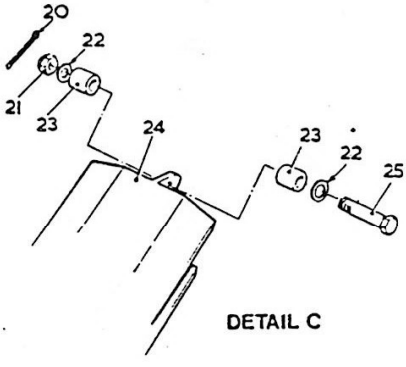

DETAIL C

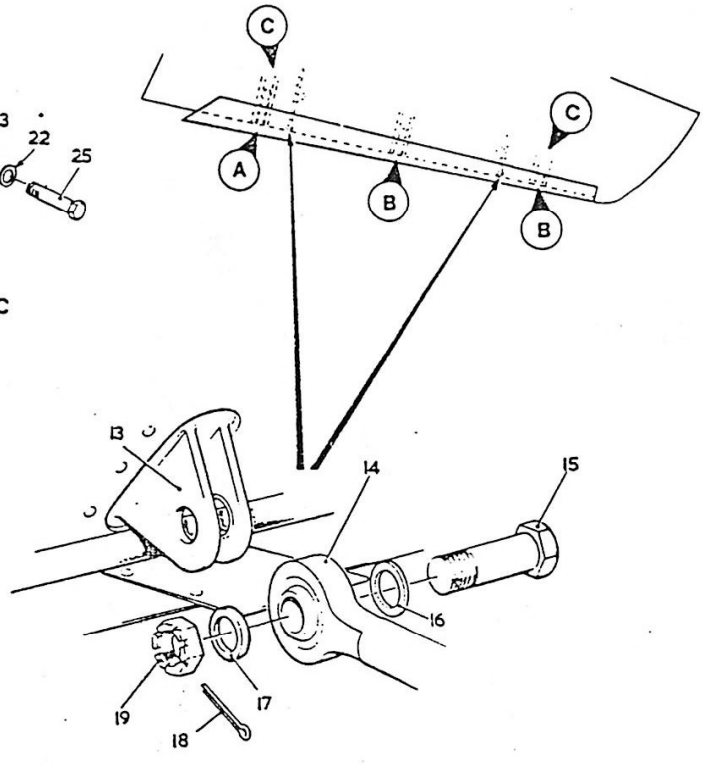

1 FORK
2 PIN
3 FORK MOUNTED ROLLER
4 PIN MOUNTED ROLLER
5 TAB WASHER
6 BOLT
7 SERRATED BUSH
8 GREASE NIPPLE
9 CARRIAGE RIB
10 SERRATED LOCKING PLATE
11 BOLT
12 NUT

13 JACK RIB
14 SCREW JACK EYE END
15 BOLT
16 WASHER
17 DISTANCE TUBE
18 SPLIT PIN
19 NUT
20 SPLIT PIN
21 NUT
22 WASHER
23 DISTANCE TUBE
24 SLAT TRACK
25 BOLT

FIG 22 ATTACHMENT OF SLAT TO MAINPLANE

6.7.1. (contd)
and pockets are removable. There are two self lubricating bushes assembled in each screw jack mounting bracket.

Slat Drive Shaft Bearing Mountings

Bearing pedestals bolted to cleats on the front face of the front spar at Ribs 3 and 6, 10 and 11 hold the bearing assemblies for the slat drive shaft. Each bearing assembly is a self-aligning, double row ball bearing which is pre-packed with grease before assembly.

6.7.2. Flaps.

There are four curved tracks which are spliced joined to the upper and lower mainplane skins they are also secured by cleats to the aft face of the trailing edge spar and the outboard rear spar. Tracks 1 and 2 are located at trailing edge ribs 6A and 8A and tracks 3 and 4 at trailing edge ribs 12 and 13.

Flap Screw Jack Mountings

Flap screw jack mounting brackets are secured to the trailing edge spar and the outboard rear spar adjacent to the flap tracks. Behind the mountings for No.2 and 3 screw jacks are fuel pockets similar to those of the slat pockets and differ only in as much as they are not removable items.

Flap Drive Gearbox Attachments

The attachment for the flap drive bevel gearbox is on the aft face of the inboard rear spar, at trailing edge rib 3, that for the reduction gearbox is on the aft face of the outboard rear spar between flap tracks 3 and 4.

Flap Drive Limiter

The attachment for the flap drive limiter is on the after face of the trailing edge spar at the intersection of Rib 7A.

Drive Shaft Bearing Mountings

A bearing pedestal is bolted to cleats on the aft face of the inboard rear spar between trailing edge ribs 3 and 4 for the flap drive shaft. The bearing is a self aligning double row ball bearing pre-packed with grease before assembly.

6.7.3. Spoilers.

Spoiler Hinges

Four spoiler hinges, two for each spoiler are mounted in the trailing edge structure adjacent to the trailing edge Ribs 4,5,6, and 7.

The inboard hinge of each spoiler is known as the power hinge and the outboard hinge the idler.

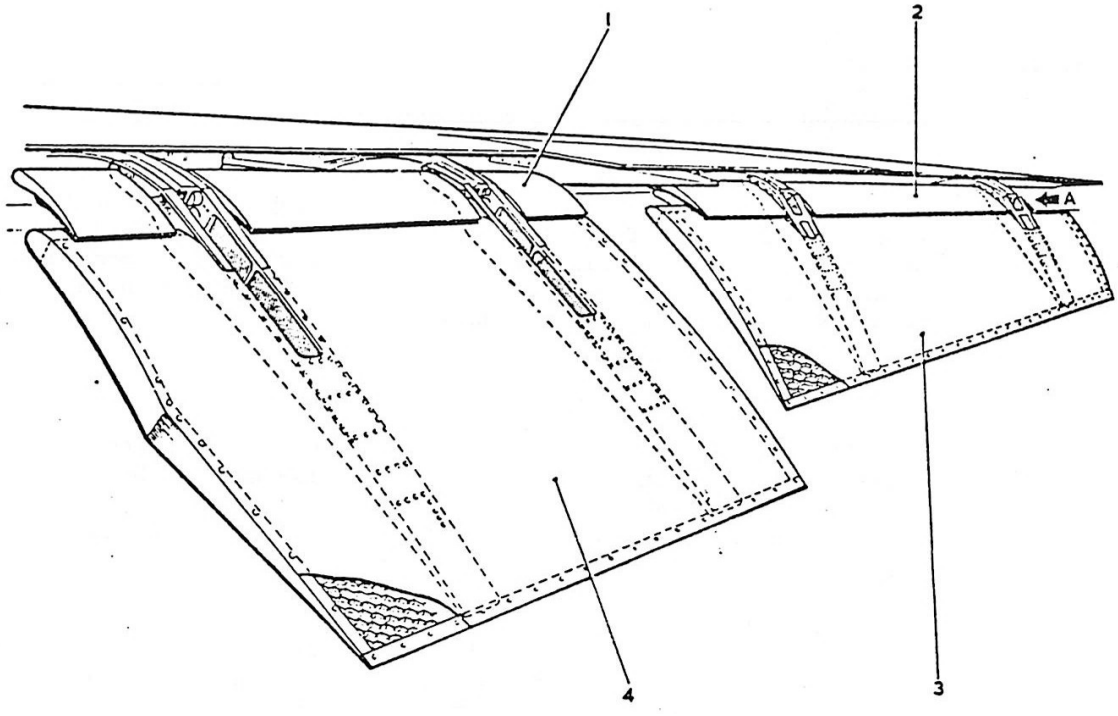

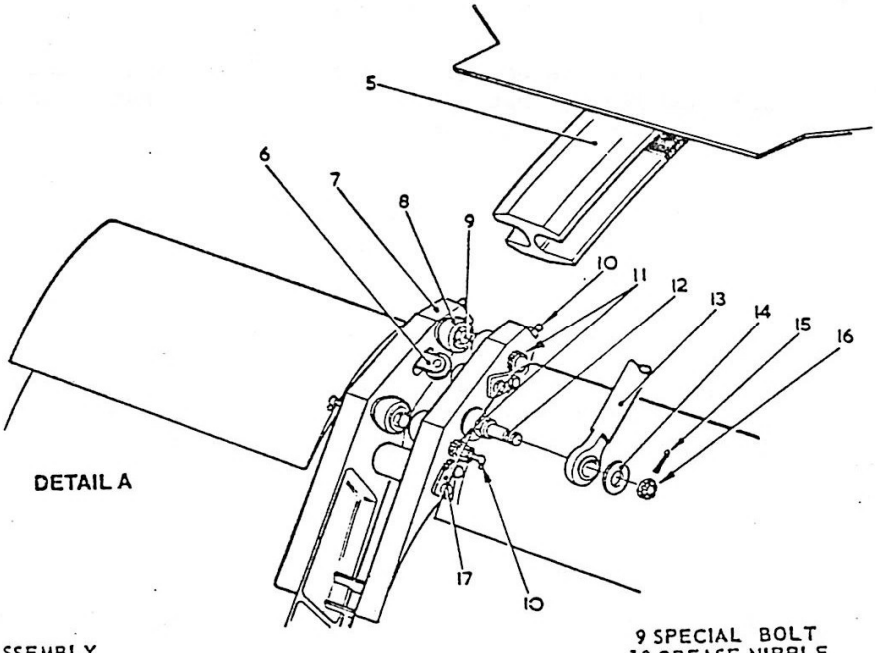

1 INBOARD VANE ASSEMBLY
2 OUTBOARD VANE ASEMBLY
3 OUTBOARD FLAP
4 INBOARD FLAP
5 FLAP TRACK
6 FORK-MOUNTED ROLLER (NOT FITTED ON INBOARD ATTACHMENT POINT)
7 CARRIAGE RIB ASSEMBLY
8 PIN MOUNTED ROLLER
9 SPECIAL BOLT
10 GREASE NIPPLE
11 SERRATED BUSH
12 SPECIAL STUD
13 SCREW JACK EYE END
14 WASHER
15 SPLIT PIN
16 NUT
17 SERRATED LOCKING PLATE

FIG 23 ATTACHMENT OF FLAP TO MAINPLANE

1 POWERED HINGE BLOCK
2 SPECIAL PIN
3 HINGE PIN
4 POWERED HINGE
5 BOLT
6 SPLIT PIN
7 WASHER
8 LINK ASSEMBLY
9 IDLER HINGE BLOCK (INBOARD SPOILER)
10 BUSH
11 IDLER HINGE
12 HINGE PIN
13 GREASE NIPPLE
14 RETAINING PLATE
15 BOLT
16 IDLER HINGE BLOCK (INBOARD SPOILER)

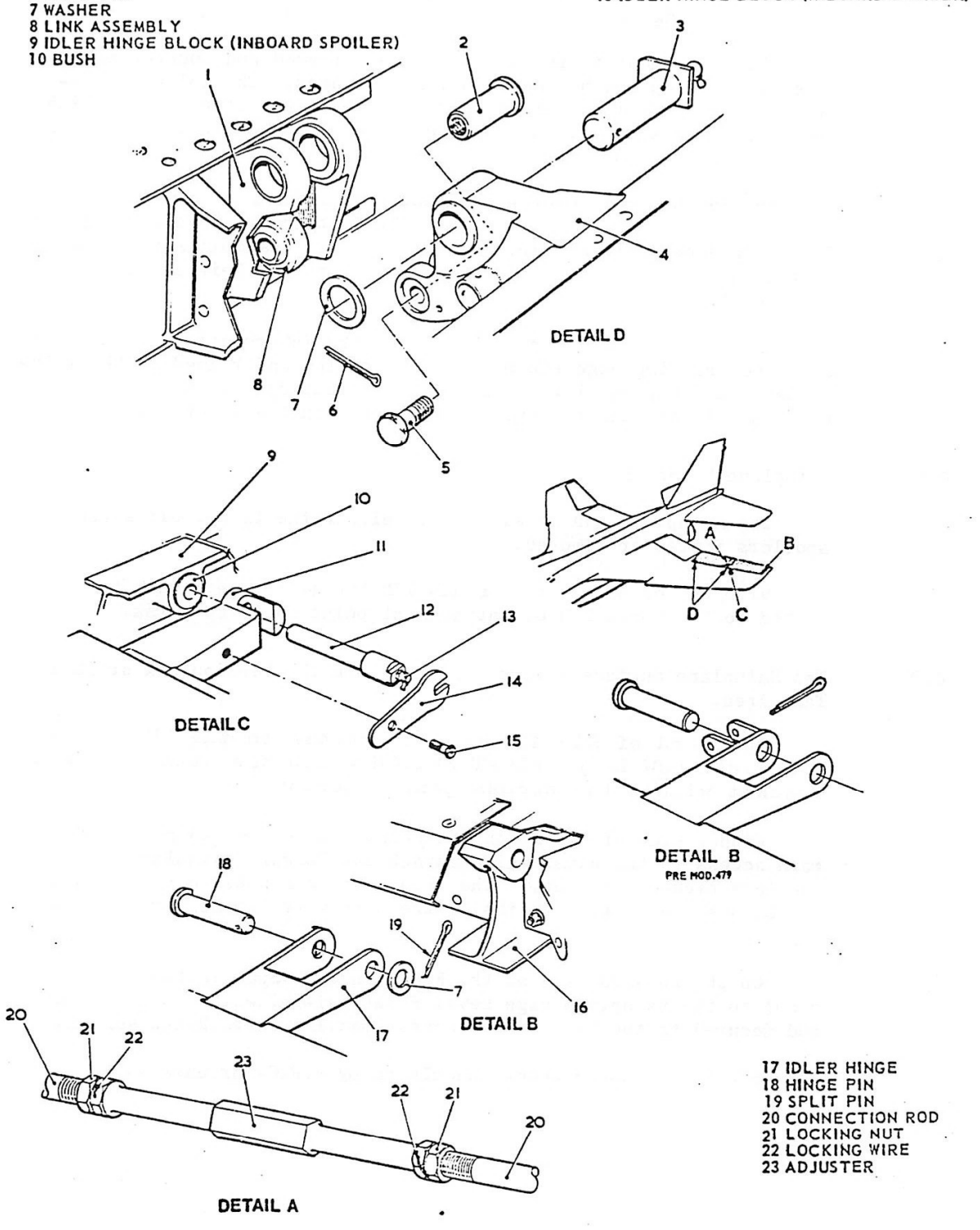

17 IDLER HINGE
18 HINGE PIN
19 SPLIT PIN
20 CONNECTION ROD
21 LOCKING NUT
22 LOCKING WIRE
23 ADJUSTER

FIG 24 ATTACHMENT OF SPOILER TO MAINPLANE

6.7.3. (contd)

Spoiler Jack attachment

The attachment for the spoiler jack is in the trailing edge structure at the intersection of T.E.R. 3.

The attachment is formed by drilled, reamed and counter bored holes in the top and bottom mainplane surfaces. The holes accommodate top-hat section bearing caps which hold the trunnion to which the spoiler jack is attached. Shims under the bearing caps allow for end float adjustment.

Spoiler Control Lever Attachment

The attachment brackets for the inboard and outboard spoiler bell crank lever assemblies are similar to the spoiler jack mounting and are adjacent to their associated hinge centre-line.

The idler lever attachments are at the intersection of the rear spar and trailing edge Rib.5. Holes drilled and reamed in the mainplane skin upper and lower surfaces, the rear spar flanges and two mounting blocks accept a special pin on which the lever pivots.

6.8. Mainplane Slinging.

The mainplane can be slung with either the flaps, slats and spoilers fitted or removed.

With the control surfaces REMOVED the lifting eye must be fitted to the FORWARD block attachment point and vice versa.

6.9. Top Mainplane Surface Access Panels within the Torsion Box or Fuel Tank Area.

Outboard of Rib 12. to gain access to the FUEL NO AIR VALVE and LOW LEVEL FLOAT SWITCH which are attached to a bracket within the access panel aperture.

Either side of Rib 2. on the Leading Edge are two panels which gain access to the nuts, which attach the Forward Mainplane to Fuselage pick-up bracket. The inboard access panel between Rib 1 and 2, also has fitted to its centre a gravity overhead refuelling cap.

On the Forward face of the Front Inboard Spar is the access panel to the Mainplane High Level Float Switch, which is attached and secured to the back of the access panel by attachment screws.

Sealing of these access panels is by P.R.C. or Gaskets.

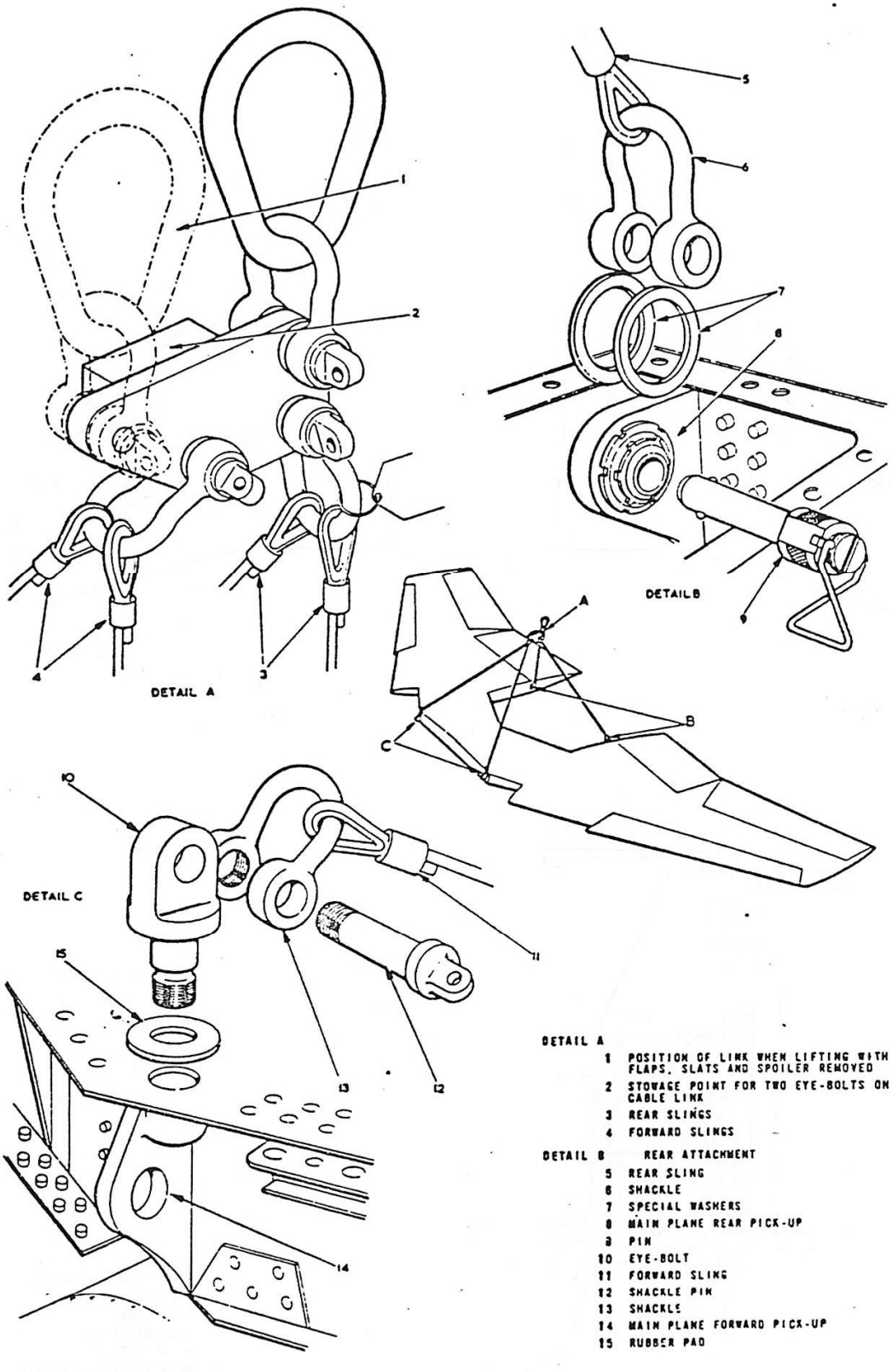

DETAIL A

1 POSITION OF LINK WHEN LIFTING WITH FLAPS, SLATS AND SPOILER REMOVED
2 STOWAGE POINT FOR TWO EYE-BOLTS ON CABLE LINK
3 REAR SLINGS
4 FORWARD SLINGS

DETAIL B REAR ATTACHMENT

5 REAR SLING
6 SHACKLE
7 SPECIAL WASHERS
8 MAIN PLANE REAR PICK-UP
9 PIN
10 EYE-BOLT
11 FORWARD SLING
12 SHACKLE PIN
13 SHACKLE
14 MAIN PLANE FORWARD PICK-UP
15 RUBBER PAD

FIG 25 FITTING SLING

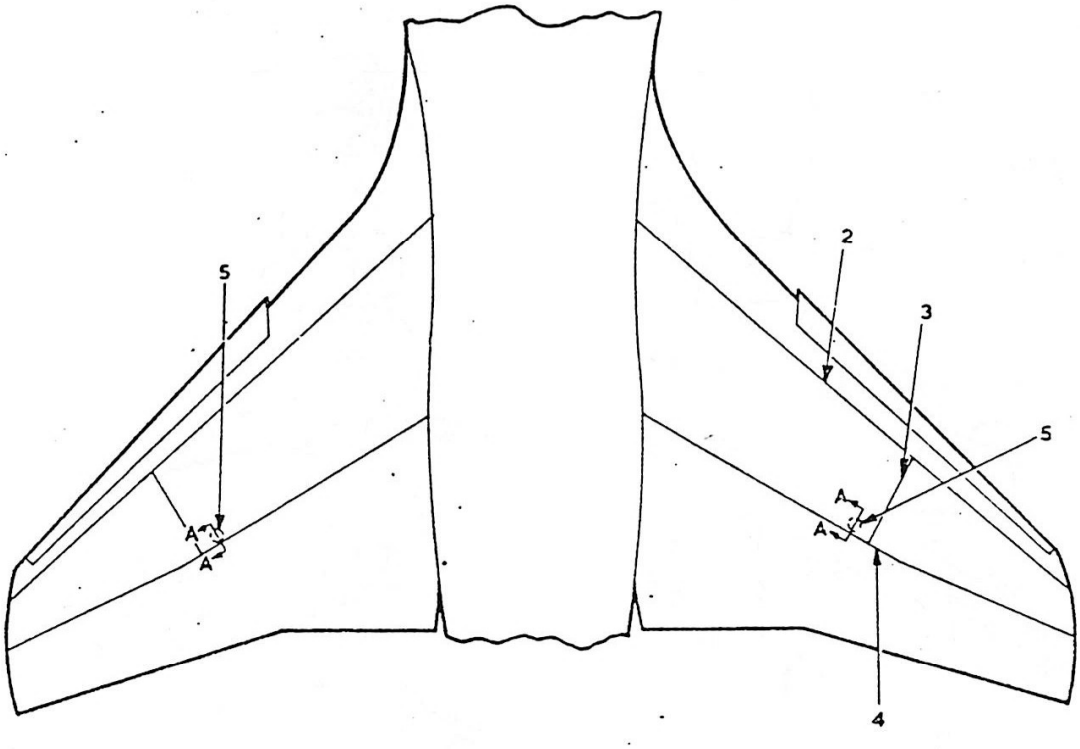

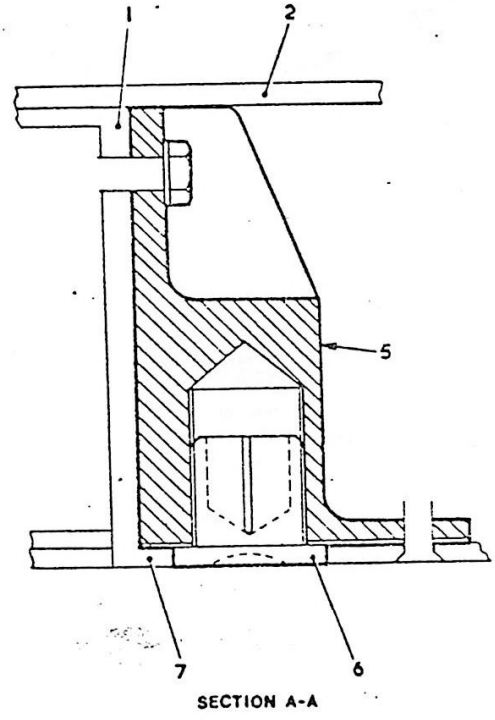

SECTION A-A

1 REAR SPAR
2 MAIN PLANE UPPER SKIN
3 RIB 11
4 REAR SPAR
5 JACKING BRACKET
6 BLANKING PLUG
7 MAIN PLANE LOWER SKIN

FIG 26 JACKING BRACKETS

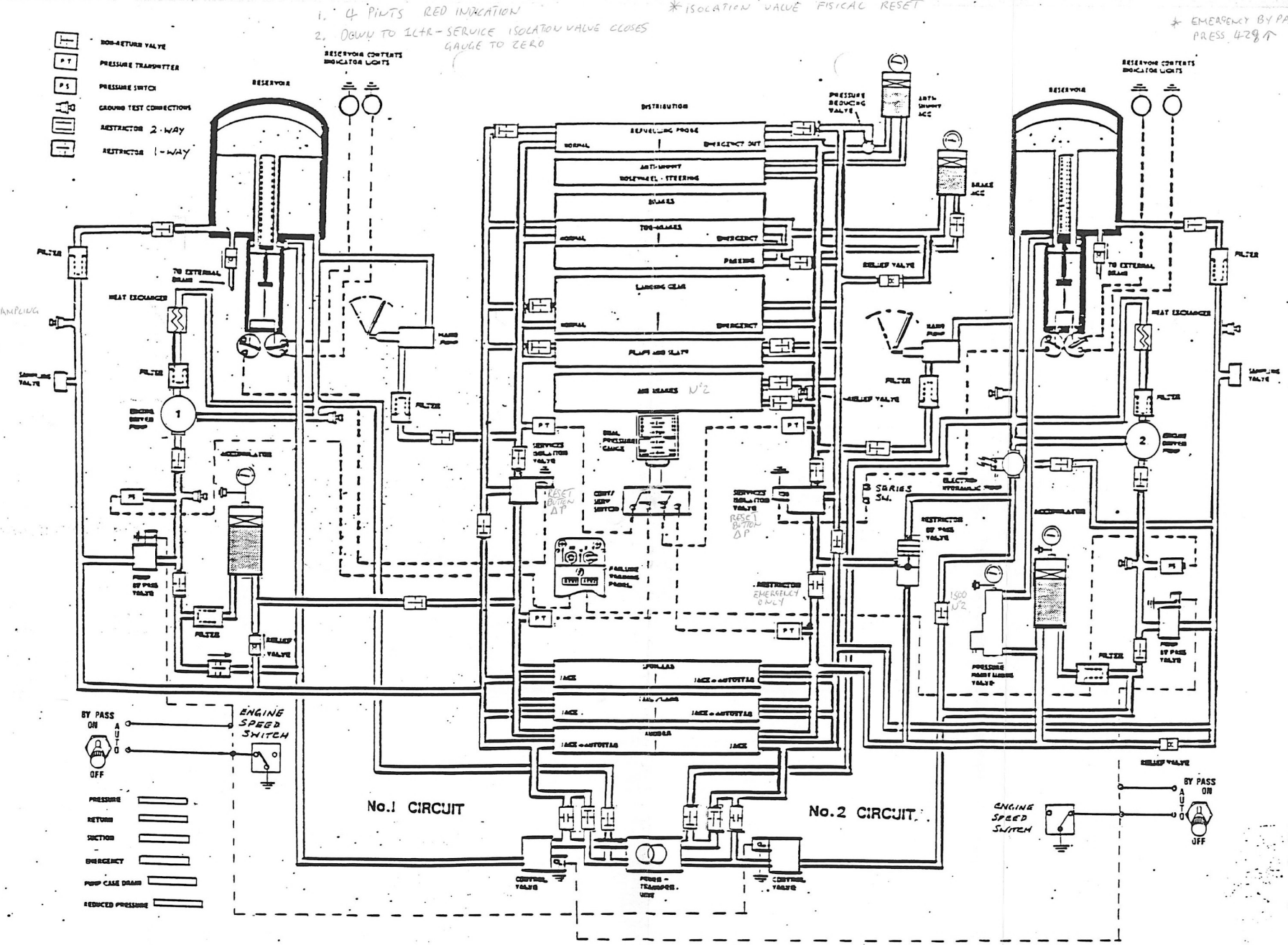
1. 4 PINTS RED INDICATION
2. DOWN TO LTR-SERVICE ISOLATION VALVE CLOSES GAUGE TO ZERO
* ISOLATION VALVE FISICAL RESET
* EMERGENCY BY PASS VALVE PRESS 429↑
NON-RETURN VALVE
PRESSURE TRANSMITTER
PRESSURE SWITCH
GROUND TEST CONNECTIONS
RESTRICTOR 2-WAY
RESTRICTOR 1-WAY
RESERVOIR CONTENTS INDICATOR LIGHTS
RESERVOIR
DISTRIBUTION
REFUELLING PROBE
NORMAL
EMERGENCY
ANTI-SKID
STEERING
BRAKES
TOW-BRAKES
PARKING
LANDING GEAR
FLAPS AND SLATS
AIR BRAKES N°2
PRESSURE REDUCING VALVE
ANTI SKID ACC
BRAKE ACC
RELIEF VALVE
FILTER
TO EXTERNAL BRAKE
HEAT EXCHANGER
SAMPLING VALVE
ACCUMULATOR
BY PASS VALVE
SERVICE ISOLATION VALVE
DIFF. PRESSURE GAUGE
DIFF. PRESS SWITCH
RESET BUTTON ΔP
FAILURE WARNING PANEL
RESTRICTOR EMERGENCY ONLY
1500 N°2
SERIES 2
ELECTRO HYDRAULIC VALVE
PRESSURE RELIEF VALVE
CONTROL VALVE
PRESS-TRANSDUCER UNIT
BY PASS ON
AUTO
OFF
ENGINE SPEED SWITCH
PRESSURE
RETURN
SUCTION
EMERGENCY
PUMP CASE DRAIN
REDUCED PRESSURE
No.1 CIRCUIT
No.2 CIRCUIT

CHAPTER. 1.

HYDRAULIC POWER SYSTEM.

CONTENTS.

1. HYDRAULIC POWER SYSTEM.
1.1. INTRODUCTION.
1.2. No.1. CIRCUIT.
1.3. No.2. CIRCUIT.

2. COMPONENT LIST.
2.1. No.1. CIRCUIT.
2.2. No.2. CIRCUIT.

3. SYSTEM OPERATION.
3.1. No.1. POWER CIRCUIT.
3.2. No.2. POWER CIRCUIT.

4. SYSTEM COMPONENTS.
4.1. HYDRAULIC RESERVOIR.
4.2. ENGINE DRIVEN PUMP.
4.3. PALMER HIGH PRESSURE FILTER.
4.4. PALMER HIGH PRESSURE HAND PUMP FILTER.
4.5. FAIREY LOW PRESSURE RETURN TO RESERVOIR FILTER.
4.6. FAIREY LOW PRESSURE CASE DRAIN FILTER.
4.7. HEAT EXCHANGER.
4.8. HYDRAULIC PUMP BY-PASS VALVE.
4.9. PRESSURE SWITCH.
4.10. HYDRAULIC ACCUMULATORS.
4.11. SERVICES ISOLATION/DUMP VALVE.
4.12. PRESSURE TRANSMITTER.
4.13. SAMPLING VALVE.
4.14. GROUND CONNECTION.
4.15. HAND PUMP.
4.16. VARIABLE RESTRICTOR.
4.17. PRESSURE RELIEF VALVE.
4.18. NON-RETURN VALVES.
4.19. ELECTRO-HYDRAULIC PUMP.
4.20. PRESSURE MAINTAINING VALVE.
4.21. RESTRICTOR BY-PASS VALVE.
4.22. FIXED ORIFICE RESTRICTOR.

1. HYDRAULIC POWER SYSTEM.

1.1. Introduction.

The aircraft hydraulic system has two independent power circuits, identified No.1 (PORT) and No.2. (STARBOARD). Each circuit is pressurised by a hydraulic pump driven by the accessory drive of the respective engines. No.1. engine pump supplies No.1. circuit and No.2 engine pump supplies No.2. circuit. The hydraulic pump for each circuit produces a maximum output pressure of 206 bars (3,000psi) and is self regulating. The hydraulic pump is supplied with oil from a pressurised reservoir which charges the oil to 3 bars (43p.s.i) In the event of loss of either system due to engine failure the system, normally supplied by the failed engine, is maintained in operation by means of a third system known as the Power Transfer Unit (P.T.U.).

The flying controls are fully powered and there is no provision for manual reversion, and to ensure maximum control the hydraulic system is protected against low fluid content by a services isolation valve which will reserve remaining oil for flying controls.

An electro-hydraulic pump is fitted into No.2 system to provide hydraulic power in the event of double engine failure or double pump failure to provide the flying controls with emergency power.

A hand pump is fitted in each system, but is for ground use only.

No's 1 and 2 systems pressure is monitored on a dual pressure hydraulic gauge and the Services or Flying Controls pressure can be monitored by operating a switch next to the gauge.

Pressure switches control visual and audio warning and automatically operate the electro-hydraulic pump.

A pressure relief valve in each system ensures the system pressure does not exceed 248 bars (3600 p.s.i).

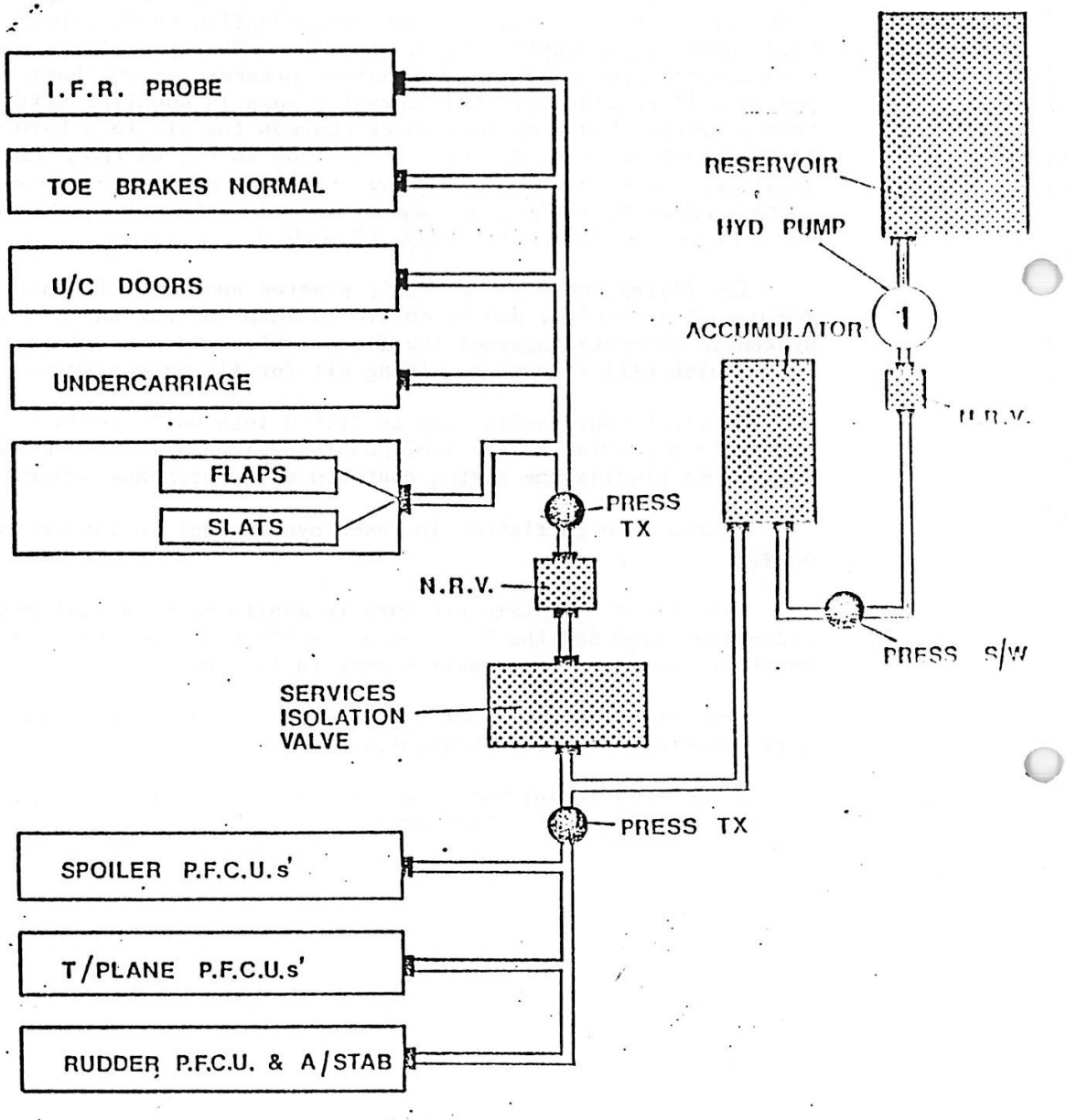

BLOCK DIAGRAM NO.1 SYSTEM

1.2. No.1. Circuit. NORMAL

No.1. engine driven pump draws fluid from its individual reservoir and supplies the following services:-

Rudder Power Flying Control Unit.

Tailplane Power Flying Control Units. 2 off PORT & STARBOARD.

Spoiler Power Flying Control Units. 2 off PORT & STARBOARD.

Flap Motor.

Slat Motor.

Wheel brakes (Normal with Anti-Skid).

Undercarriage (Normal)

Refuelling Probe.

Rudder Autostabiliser Circuit.

1.3. No.2. Circuit.

No.2. engine driven pump draws fluid from its own reservoir and supplies the following services:-

Rudder. P.F.C.U.

Tailplane. P.F.C.U. 2 off PORT & STARBOARD.

Spoiler. P.F.C.U. 2 off PORT & STARBOARD.

Airbrakes.

Flap motor.

Slat motor.

Undercarriage (Emergency Down).

Wheel Brakes (Emergency, without Anti-Skid).

Wheel Brakes (Parking on Accumulator).

Nosewheel steering and anti-shimmy.

Refuelling Probe (Emergency Out).

Tailplane Autostabiliser Circuit.

Spoiler Autostabiliser Jacks. 2 off PORT & STARBOARD.

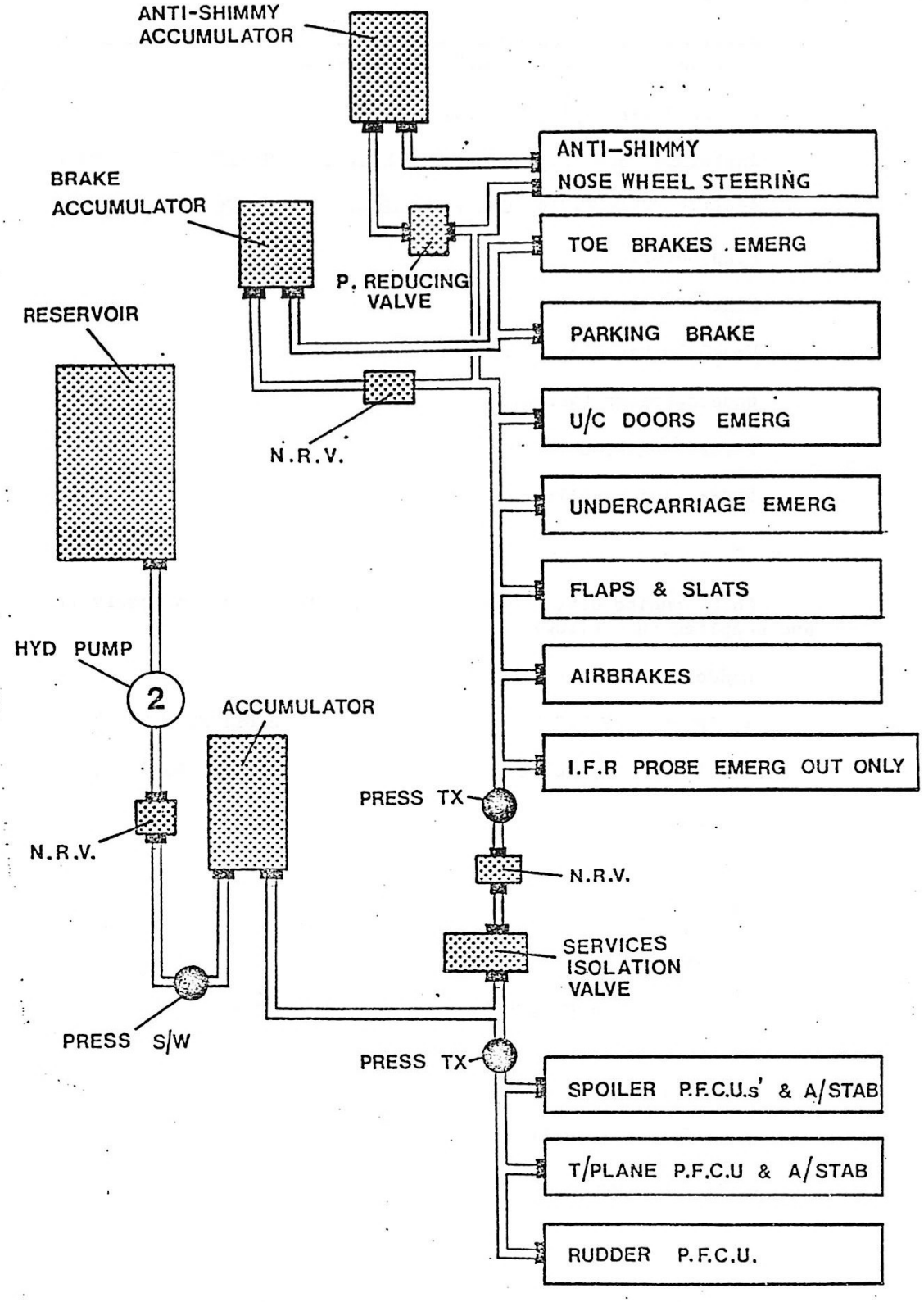

BLOCK DIAGRAM NO.2 SYSTEM

FIG.3

2. COMPONENT LIST.

2.1. No.1. Power Circuit.

A lay-out of the hydraulic power circuits are shown in FIG.4.&5. The circuits are arranged in two parts to enable the systems to be isolated from each other in the event of a low fluid state occurring. Each circuit contains the following components:=

Hydraulic Reservoir (complete with fluid level switch)

Engine driven pump.

Four filters - one in the pressure delivery pipe line from the Engine Driven Pump, one in the common return to reservoir pipe line, one in the Engine Driven Pump off load/case drain pipe line the fourth filter being in the handpump pressure delivery line.

Heat exchanger.

By-Pass Valve.

Hydraulic accumulator.

Two pressure transmitters.

One pressure switch.

Isolation valve.

Sampling valve.

Three ground test connections, with blanking caps, for pressure suction and by-pass lines.

Hand pump

Variable Restrictor. (No.1. System Only).

Pressure Relief Valve.

Four Non-Return Valves.

2.2. No.2. Power Circuit.

No.2. system power circuit has the following additional component with the deletion of the Variable Restrictor Valve:-

Electro pump.

Pressure maintaining valve.

Fixed Orifice Restrictor.

Restrictor by-pass valve.

Two Non-Return Valves.

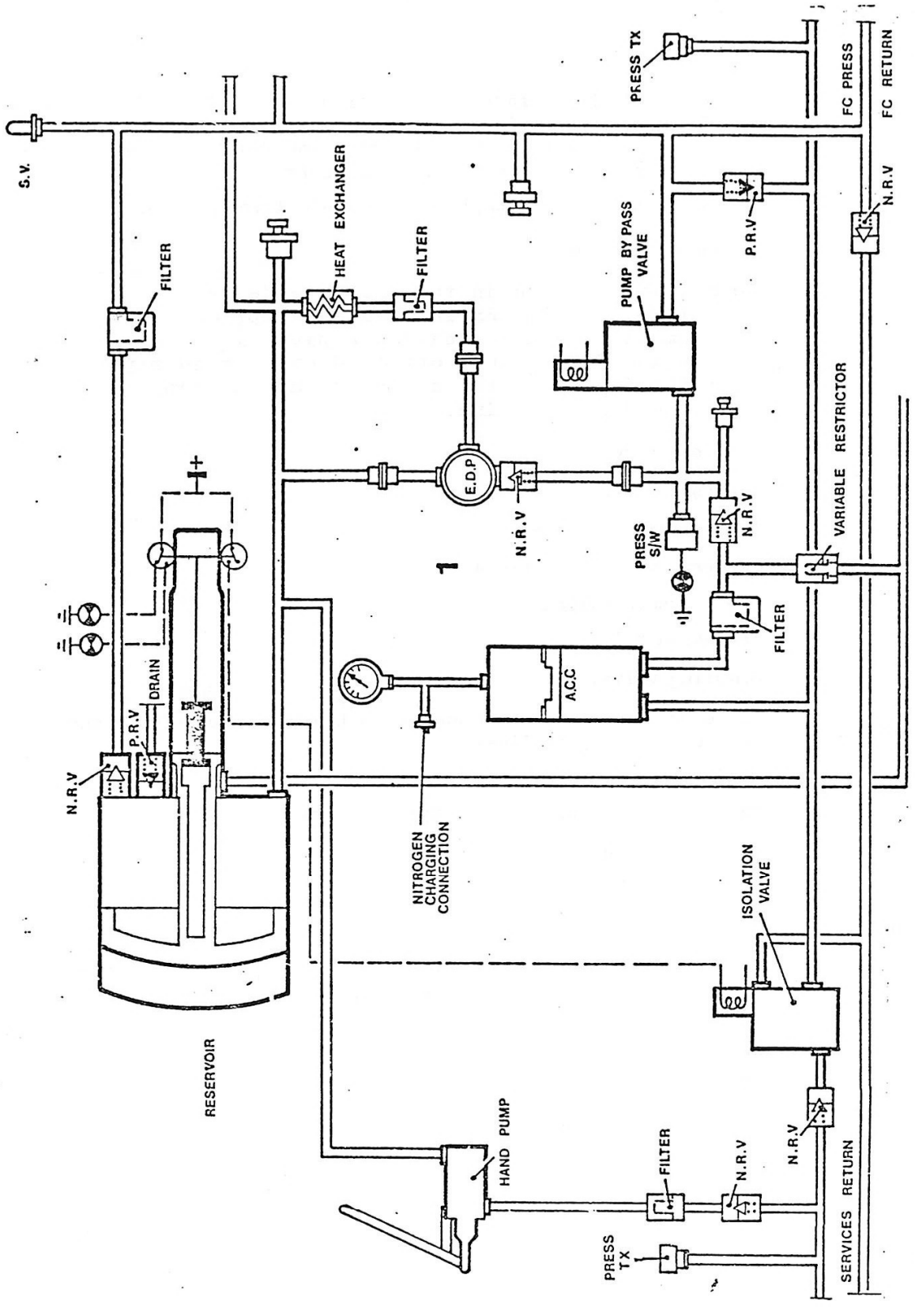

NO.1 SYSTEM POWER CIRCUIT

FIG.4

3. SYSTEM OPERATION.

3.1. No.1. System Power Circuit. (FIG 4).

No.1. circuit comprises:-

A pressurised 6.15 litre (1.35 Imperial gallon) capacity reservoir in the hydraulic equipment bay in the PORT rear fuselage. Reservoir pressurisation is provided by a small integral piston, subject to pump delivery pressure, which produces a reservoir pressure of 43 p.s.i. a pressure relief valve set at 70-80 p.s.i. prevents excessive reservoir pressure. A contents switch and a low-level switch are also provided.

A self-regulating engine-driven pump providing a delivery flow of 55 litres per minute at a pressure of 3000 p.s.i.

A heat exchanger in the PORT airbrake compartment for cooling the hydraulic fluid, using fuel as a cooling medium.

An accumulator to damp pressure fluctations from the pump. The accumulator is charged with nitrogen to 1500 p.s.i.

An electrically-operated services isolation valve, controlled by the reservoir low-level switch and dividing the circuit into two parts. When the reservoir contents reduce to 1 litre the valve closes, leaving the flying control jacks fed from the system and isolating the remaining services. The valve can only be re-opened manually on the ground.

An electrically-operated by-pass valve which reduces engine load during starting, relighting or during a dry crank, by routing pump output back to the reservoir. The valve is controlled by a 'HYD 1' switch having three settings:-

'ON' - Valve open.

'AUTO' - Valve remains open whenever the engine RPM are less than 42%.

'OFF' - valve closed.

A pressure switch in the engine-driven pump output line closes if pressure reduces to 1550 p.s.i. and operates the attention-getter and the 'HYD 1' caption of the centralised warning system. Closing the switch also part-complete the automatic control circuit for the electro-hydraulic pump and the audio warning of the centralised warning system.

Two pressure transmitters, one in each side of the circuit, connected to the dual pressure indicator via a 'CONT/SERV' selector switch.

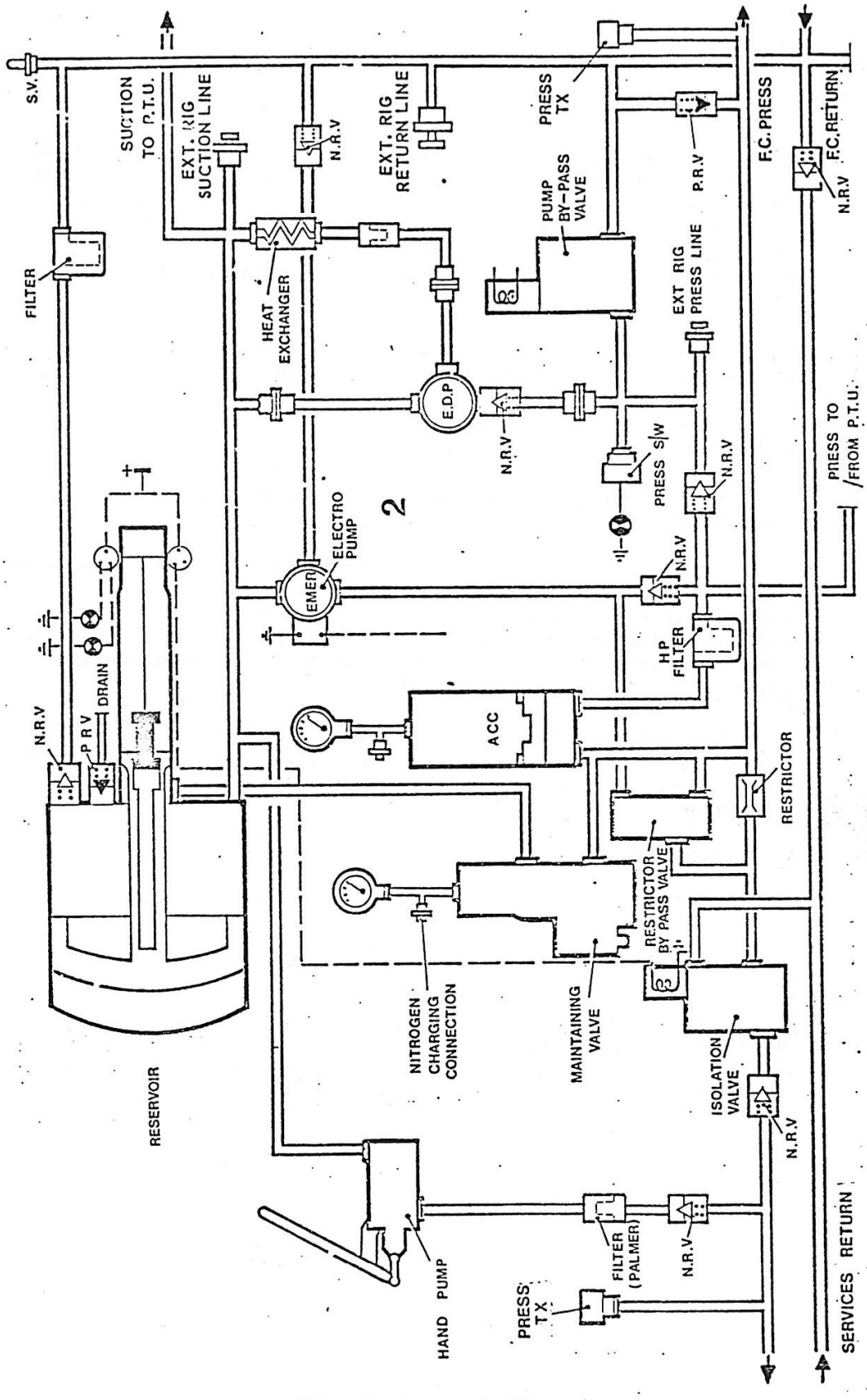

No.2 SYSTEM POWER CIRCUIT

FIG 5

3.2. No.2. System Power Circuit.

No.2. circuit is similar to No.1. but also incorporates an emergency circuit. In addition to the items described for No.1, circuit, No.2. circuit includes:-

An electro-hydraulic pump drawing fluid from No.2. reservoir and feeding No.2. circuit only.

A restrictor which prevents large demands from a service circuit selection, e.g. landing gear lowering, causing a drop in pressure in the supply to the flying controls when the Emergency Pump is in use.

A relay valve which by-passes the restrictor during normal operation. The valve is closed by pressure output from the electro-hydraulic pump.

Two accumulators, one each for wheelbrakes and nosewheel steering. The former is charged with nitrogen to 1500 p.s.i. (with hydraulic pressure released) and the latter is charged to 235psi.

A pressure maintaining valve incorporating a small accumulator charged with nitrogen to 1500 p.s.i. which maintains reservoir pressurisation to ensure priming of the electro-hydraulic pump.

3.3. Electro-Pump Circuit.

The electro-pump circuit is incorporated in No.2. circuit and supplies the same services as No.2. circuit but at a reduced pressure and rate of flow. It's primary use is to provide emergency hydraulic power to operate the remaining services but flow to these is restricted to ensure the P.F.C.U's are not starved by large demands by the Services.

The oil supply to the pump is by the No.2. system reservoir, and the pressure in the reservoir is maintained by a Pressure Maintaining Valve which holds the reservoir pressure after No.2. system pump or engine, has failed. This ensures a positive supply to the electro pump during its initial operation, which will afterwards maintain its own pressure once it has produced operating pressure in the No.2. system.

The circuit is automatically switched on in the event of a double engine or pump failure, but it can also be operated manually or switched to the 'OFF' position.

NOTE:

The Electro-hydraulic pump does not have sufficient delivery to enable the nosewheel steering to be operated.

11 PINTS

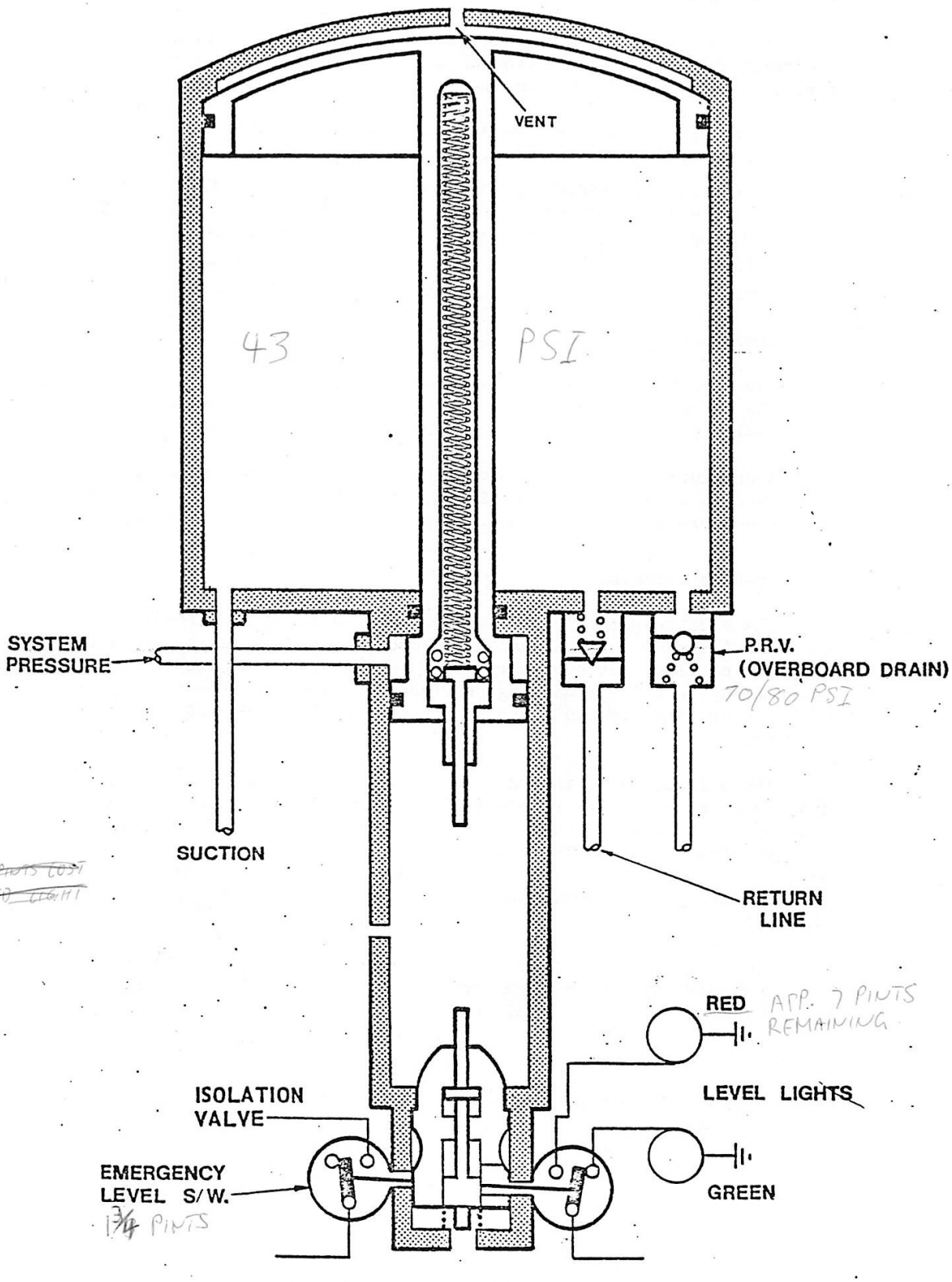

FIG.6 HYDRAULIC RESERVOIR SCHEMATIC

4. SYSTEM COMPONENTS.

4.1. Hydraulic Reservoir.

4.1.1. Introduction.

The reservoir located in Zone 211 on the Port side and Zone 212 on the Starboard side of the fuselage centre line between frame 30 and 32 serves as a storage tank. The storage capacity is approximately 11 pints (6.15 litres) and is pressurised by its own system pump delivery pressure. The possibility of overfilling the reservoir is eliminated by the introduction of a pressure relief valve fitted to the cylinder end cap.

4.1.2. Description.

The unit consists of a cylinder which houses a piston and piston rod assembly and which is closed by an air end cover at one end and by a fluid end cover at the other. The fluid end cover is formed with a hollow stem containing a gland through which passes the piston rod. The piston is bolted to one end of the piston rod, the other end being enlarged into a head, fitted with seals, which slides inside the end cover stem to serve as the high pressure piston. The piston rod also contains two spring loaded plungers which depress two switch operating plungers at certain positions of the piston.

A switch housing to which is bolted two switch bracket assemblies is attached to the end of the end cover stem by a ring nut and circlip. The switch housing also accommodates the two concentric spring loaded plungers; the outer one actuating the level sensing indicator switch and the inner one actuating the refill indicator switch. The inner plunger is attached to a reset button which protrudes through the end of the housing.

4.1.3. Operation.

Pressurisation of the reservoir is achieved by an auxiliary jack which is supplied with pressure from the pump delivery line. A 70:1 reduction ratio is achieved between the reservoir piston and the piston of the auxiliary jack to give 43 p.s.i. in the reservoir from 3,000 p.s.i. system pressure. The fluid capacity is approximately 11 pints (6.15 litres). Should the fluid level fall below 1¾ pints (1 litre) a spring-loaded push-rod in the stem of the piston makes contact with micro-switches in the base of the reservoir and effects the closing of the isolation valve to the general services, thereby keeping the remaining fluid for operation of flying controls only.

Indication of Reservoir Contents is provided by two illuminated indicators, one RED and one GREEN. They are positioned on the right-hand side inside the Refuelling Panel Recess, which is situated aft of the Starboard under-carriage bay.

4.1.3. (contd).

The lamps are operated by a switch in the stem of the reservoir which is contacted by the piston to give the following indications:-

Level 'NORMAL' - Green illuminated.

Level to be replenished. - Red illuminated.

The Red lamp will light when the fluid level falls to approximately 7 pints (4 litres).

Electrical supply to the indicating lamps is controlled by a switch operated by the door of the refuelling panel and the supply to the switch is cut-off when the door is closed

Reservoir pressure is limited by a Pressure Relief Valve, limiting the pressure to 70-80 lbs/in^2 and is fitted at the highest point and vents externally via a drain.

The Relief Valve also operates when replenishment is complete.

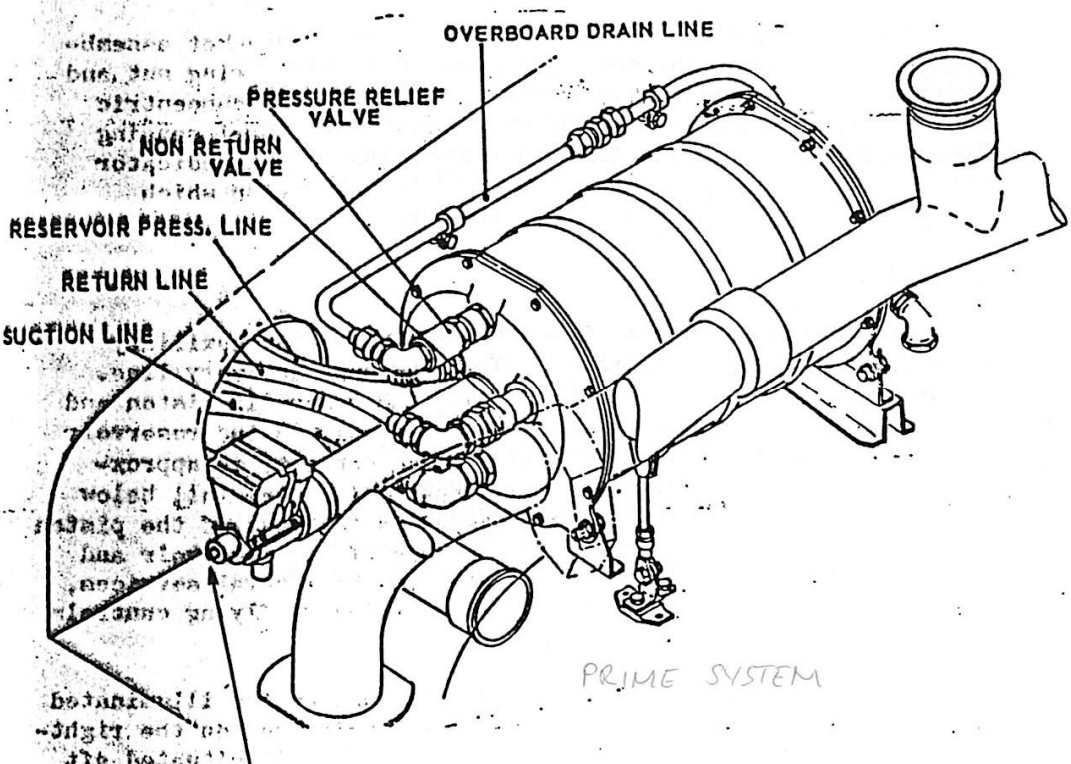

NOTE: Following replenishment for a 'Red' low-level indication, ensure that the microswitch 'button' is reset.

FIG.7 HYDRAULIC RESERVOIR INSTALLATION

4.2. Engine Driven Pump.

4.2.1. Introduction.

The Vickers Inline Hydraulic Pump Type PV3 - 115/1/UK2 is used to provide a source of power for operation of hydraulic circuits and units. The pump is mounted on the forward face of the engine auxiliary gearbox and has a maximum continuous operating speed of 3,750 R.P.M. The component is a positive displacement axial unit designed to operate as a variable displacement pump. It is auto-regulated and adjusted to give a maximum flow rate of 55 litres/min (12.1 galls/min) with a maximum outlet pressure of 3,000 P.S.I. (206 bars). The pump is capable of continuous maximum pressure with varying flow rates achieved by varying the angle of the piston yoke plate using OM - 15 fluid (H - 515) at temperatures between - 65°F and + 275°F.

The pump is designed to have a controlled internal leak rate to relieve friction and thereby relieves high pressure loadings on the engine, it also enables a lubricating and cooling flow of oil through the pump. This oil is drained from the casing via a filter and fuel cooled heat exchanger back into the pump suction line.

Three self-sealing couplings are fitted to the pump flexible hoses to facilitate quick disconnection of the pump hydraulic lines during pump removal and a quick release clamp ring securing the pump to the engine gearbox front face.

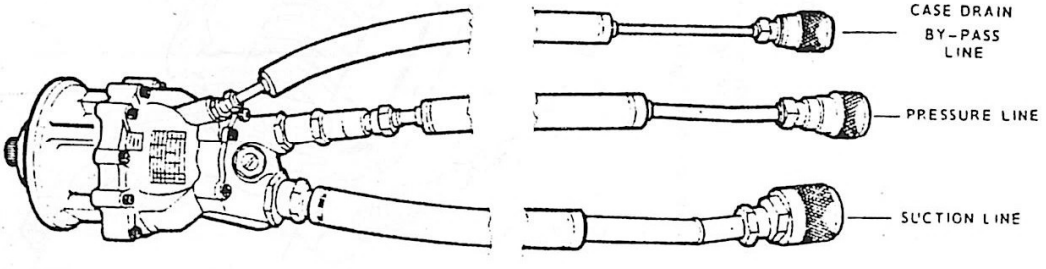

FIG. 8 ENGINE DRIVEN PUMP

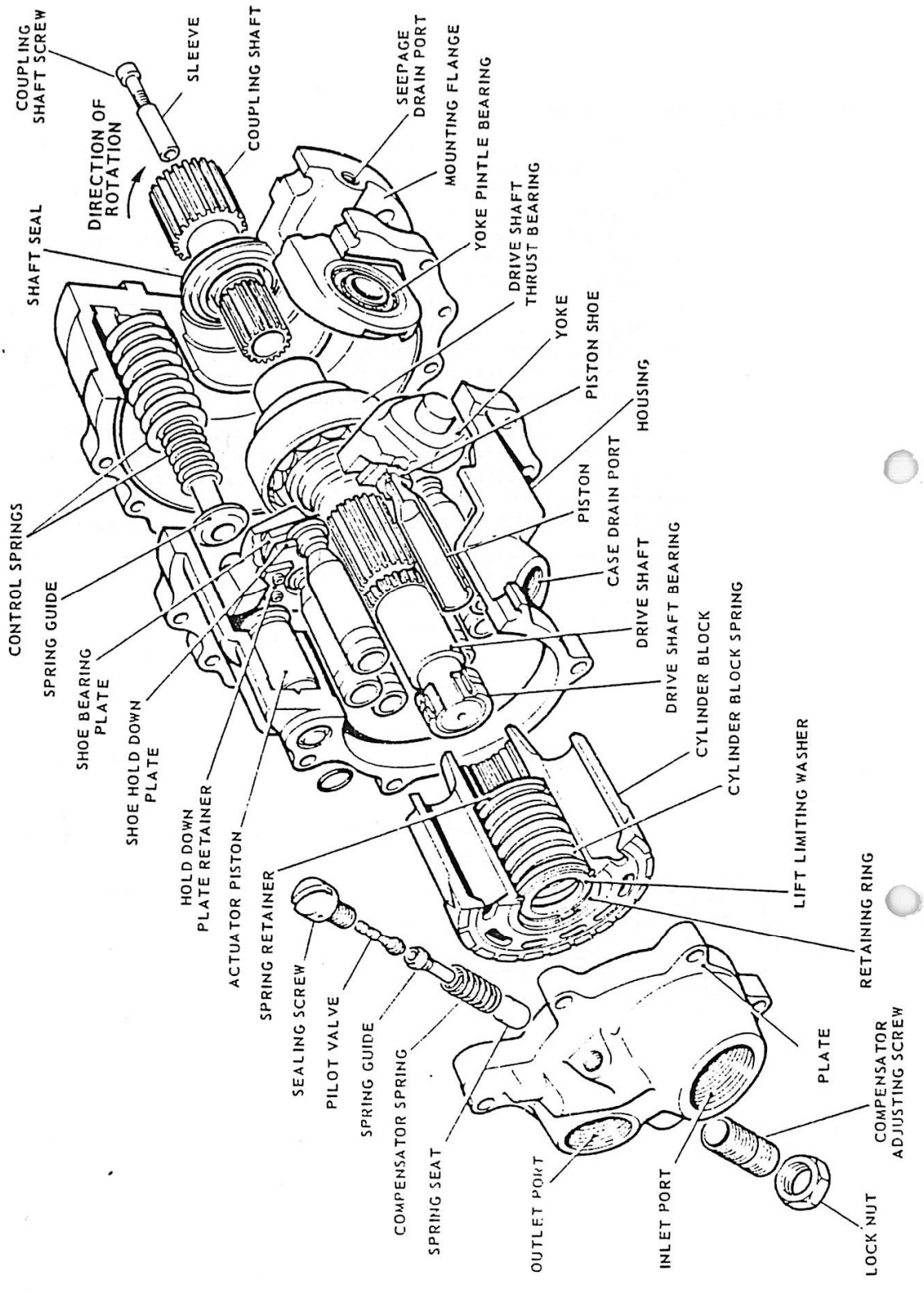

FIG. 9 E.D.P. EXPLODED VIEW

4.2.2 Description

The pump consists of a main casing manufactured in three parts and bolted together. The three parts of the pump casing are annotated:-

Mounting Flange Housing
Centre Housing
Valve Plate Housing.

4.2.3 Mounting Flange Assembly

This assembly is made up of a rotating group incorporating a Coupling Shaft splined into a Drive Shaft which is also splined into a Cylinder Block. The rotating group consists of a YOKE sub-assembly, Cylinder Block and NINE Pistons. The pistons include piston shoes, which are held in contact with a Shoe Bearing Plate by a Shoe Hold Down Plate, and rotates anti-clockwise viewed from the pump drive shaft end giving variable displacement dependent upon the angle of the Pump Yoke which is held in a Max. Stroke position by a spring loaded Yoke Guide.

4.2.4 Centre Housing

The centre housing is bolted to the Mounting Flange by 10 bolts and covers the whole of the rotating group, included in the "Housing" is an hydraulically operated Actuator Cylinder responsible for altering the Pump Yoke angle and CASE DRAIN pipe connection

4.2.5 Valve Plate Housing

The Valve Plate Housing is attached to the Centre Housing by 8 bolts and as the name implies houses a spring loaded valve assembly known as a Compensator Valve. This valve is responsible for allowing the Actuator Cylinder to move, varying pump displacement/flow rate under certain conditions. The housing acts as a cover plate completely sealing the pump and incorporates three adaptors to enable connections for SUCTION and PRESSURE pipes to be attached.

HP RELIEF VALVES
- 3600 PSI

4.2.6 Operation

Hydraulic fluid under hydraulic reservoir pressure varying between 43 - 27 P.S.I. will always be available at the pump inlet connection - each revolution of the pump is divided into INLET and OUTLET cycles.

Hydraulic fluid enters the inlet port and passes to the inlet side of a cylinder block, which is splined to and rotated by the drive shaft.

The yoke which is supported on two pintle bearings can be pushed through an arc from 0 to 17.5 degrees. The yoke angle is controlled by outlet fluid pressure. It is normally held at the maximum angle of displacement relative to the drive shaft, by control springs. With the yoke in this position, rotation of the cylinder block by the shaft will cause the pistons to reciprocate in their bores drawing fluid in the inlet connection of the valve plate assembly and forcing it out of the outlet connection.

Each piston completes a cycle during one revolution of the drive shaft. This action gives continuous, non-pulsating flow of pressure fluid to the Hydraulic System.

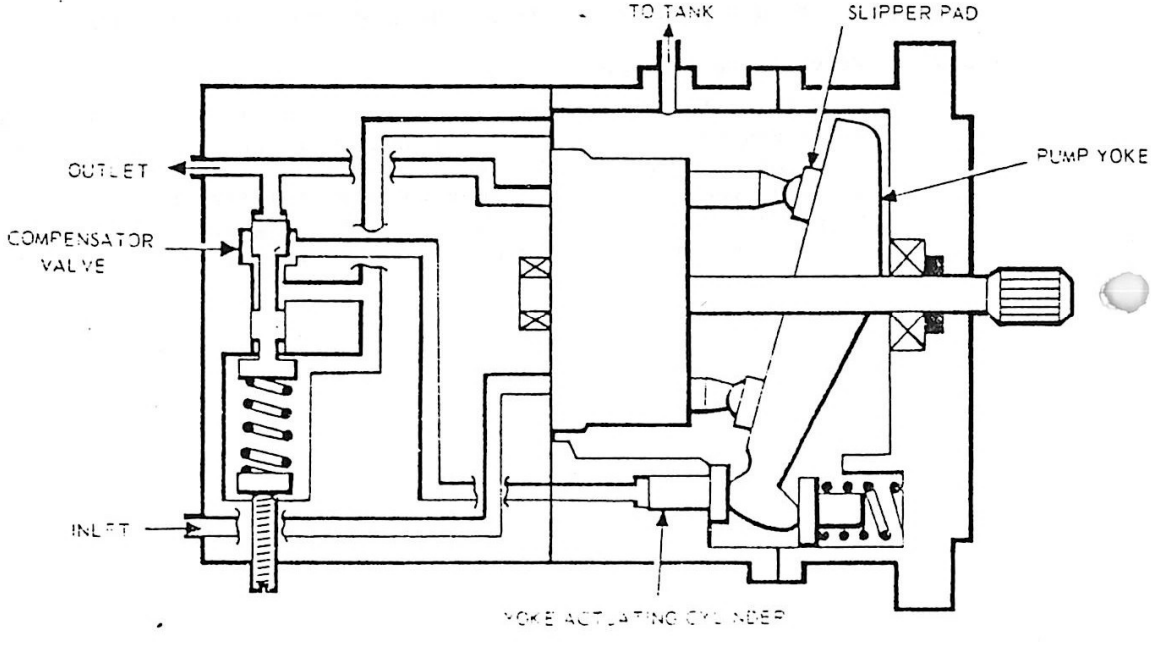

FIG. 10 E.D.P. OPERATION SCHEMATIC

(MAX STROKE 17.5°)

4.2.7. Variable Displacement.

Variable displacement is achieved by varying the piston stroke in the cylinder block. The nine piston and shoe sub-assemblies ride in a swivel type yoke sub-assembly, positioned by the actuator piston that controls yoke angle and, in turn, piston stroke. The yoke sub-assembly and pistons are held in the "Full Flow" position by the force exerted on the yoke by the spring guide and control springs. The pressure control (components of the valve plate and controls sub-assembly) senses pump outlet pressure and meters hydraulic fluid under pressure to the actuator piston. When the pump is driven in rotation and outlet pressure reaches approx 2950 P.S.I. fluid under pressure, is metered to the actuator piston. The actuator piston in turn, overcomes the force exerted by the yoke control springs and swings the yoke sub-assembly towards a "No Delivery" (zero stroke) position. A decrease in outlet pressure is followed by a corresponding reduction in pressure on the actuator piston. This allows the yoke control springs to reposition the yoke sub-assembly to an angle that will satisfy system requirements.

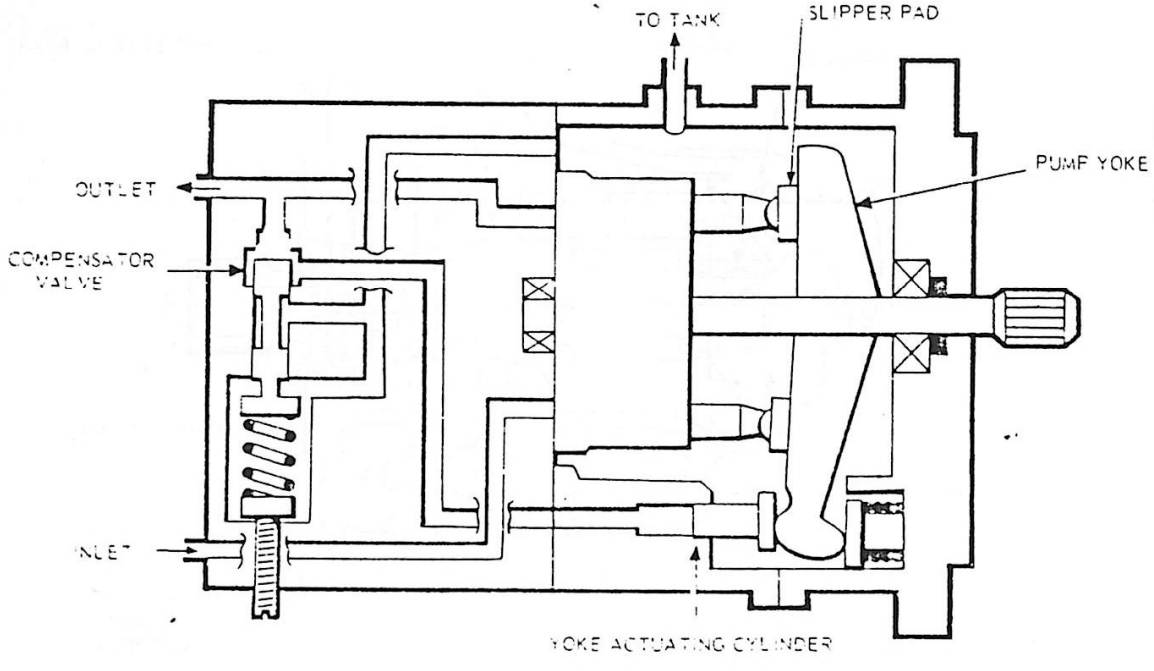

FIG. 11 E.D.P. OPERATION SCHEMATIC
(MIN. STROKE 0°)

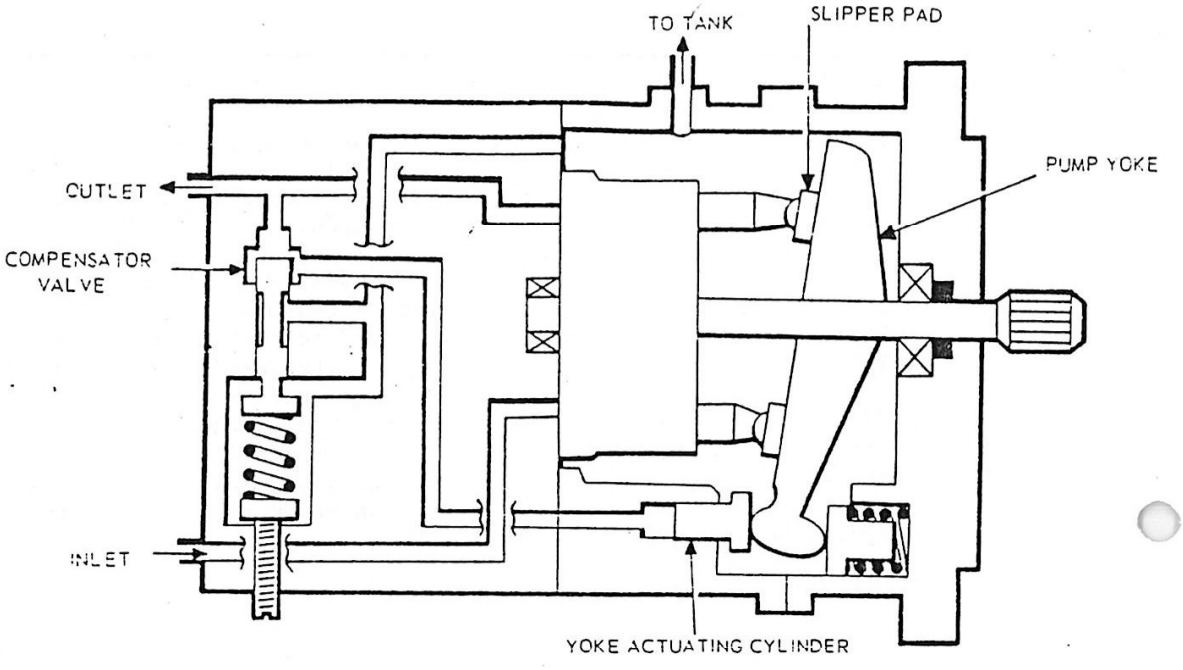

FIG. 12 E.D.P. OPERATION SCHEMATIC (INTERMEDIATE STROKE 7°)

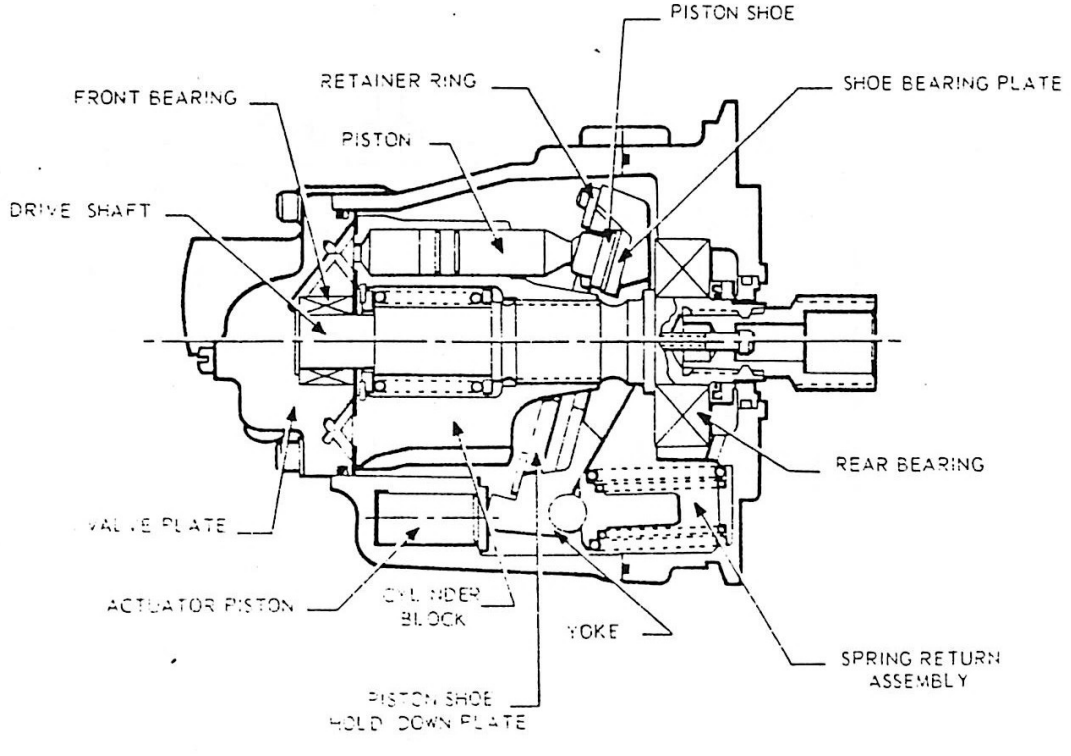

FIG. 13 E.D.P. DIAGRAMATIC

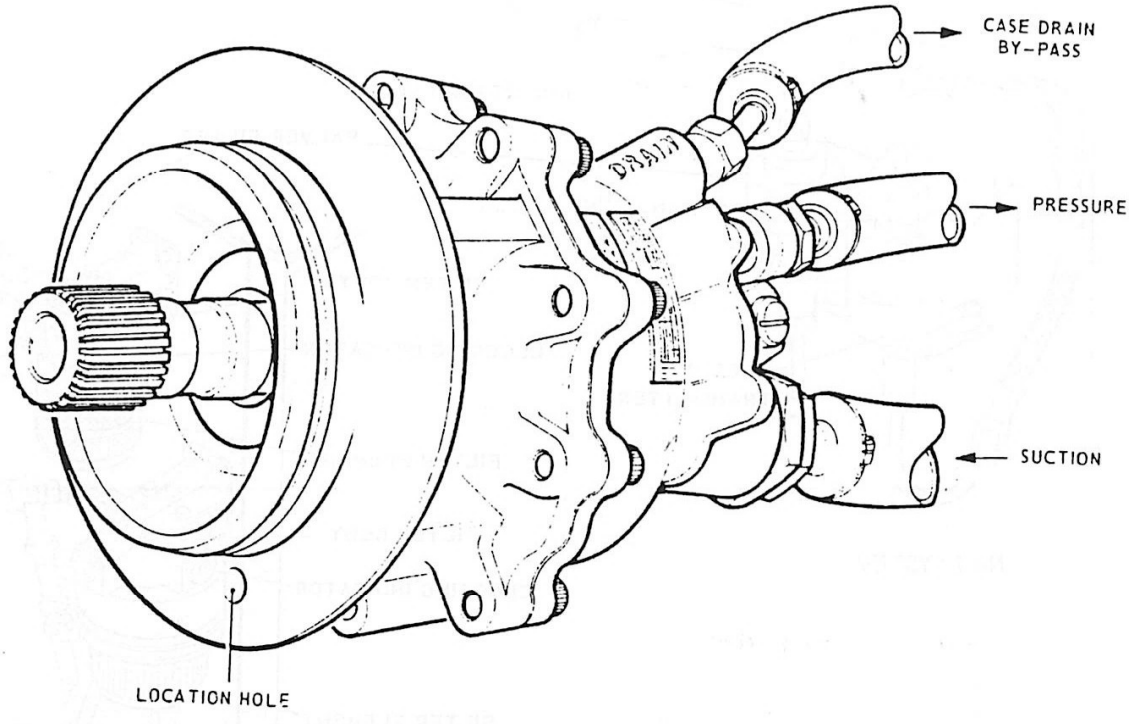

FIG. 13a. E.D.P.

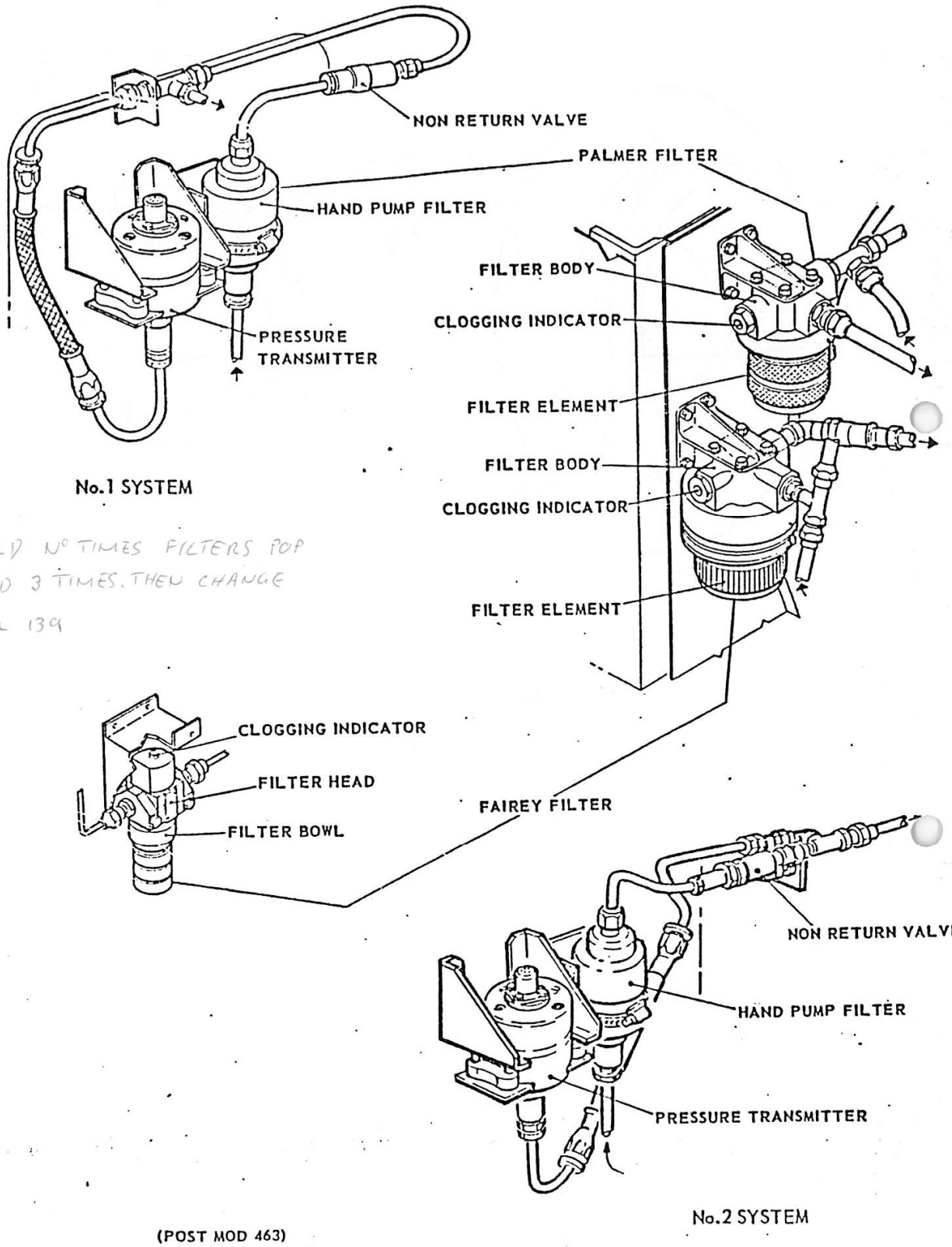

RECORD Nº TIMES FILTERS POP
ALOWD 3 TIMES. THEN CHANGE
FORM 139

FIG. 14 HYDRAULIC FILTERS

4.3. Hydraulic Filters.

4.3.1. Introduction.

Fitted to the aircraft are eight hydraulic filters, four in each power circuit. They consist of four high pressure filters manufactured by Palmer Aero-Products, and four low pressure filters manufactured by Fairey Hydraulics, Ltd.

The high pressure filters are fitted one in each engine driven pump (E.D.P) pressure delivery line of No.1. and No.2. power circuits, and are located on the rear face of frame 30 - station 8750, whilst the other high pressure filters are fitted on the forward face of frame 25 - station 8220 in the undercarriage bays both port and starboard, sides in the Hydraulic Hand Pump delivery lines.

The low pressure filters are fitted, one in each system return to reservoir line, located immediately below the high pressure filter and secured to the rear face of frame 30. The remaining low pressure filters which are fitted in the Case Drain or pump off load line are located in the port and starboard airbrake compartments.

All filters, with the exception of the Hand Pump filters are fitted with magnetic 'tell tale' clogging indicators designed to operate and protrude when the input and output pressure differential reaches a pre-determined figure. The indicators are also thermo-statically locked by a bi-metalic strip for cold start conditions.

4.3.2. Description.

Palmer High Pressure Filter. - The main high pressure filter assembly comprises of four sub-assemblies, and is capable of filtering OM-15 to a degree of 10 microns absolute:-

Filter Head.

This houses four threaded ports, of which, only three are in current use. It receives an inlet and outlet adaptor union, a pressure loss indicator assembly, and the fourth port blanked off, but it can be utilised to 'hand' the filter for an outlet/Filter Head.

Pressure Loss Indicator.

Often referred to as the Clogging Indicator Assembly, and consists of a magnetic piston held against a pole piece by a spring. On the other side of the pole piece is a RED warning button held onto the pole piece by magnetic force (North and South Pole together). A light spring tends to push the button away from the pole piece, and a bi-metallic sleeve around the RED warning button prevents it from moving when the oil temperature is below a pre-determined figure.

Filter Bowl.

The filter bowl houses the filter element, and screws into the filter head. Fitted between the filter head

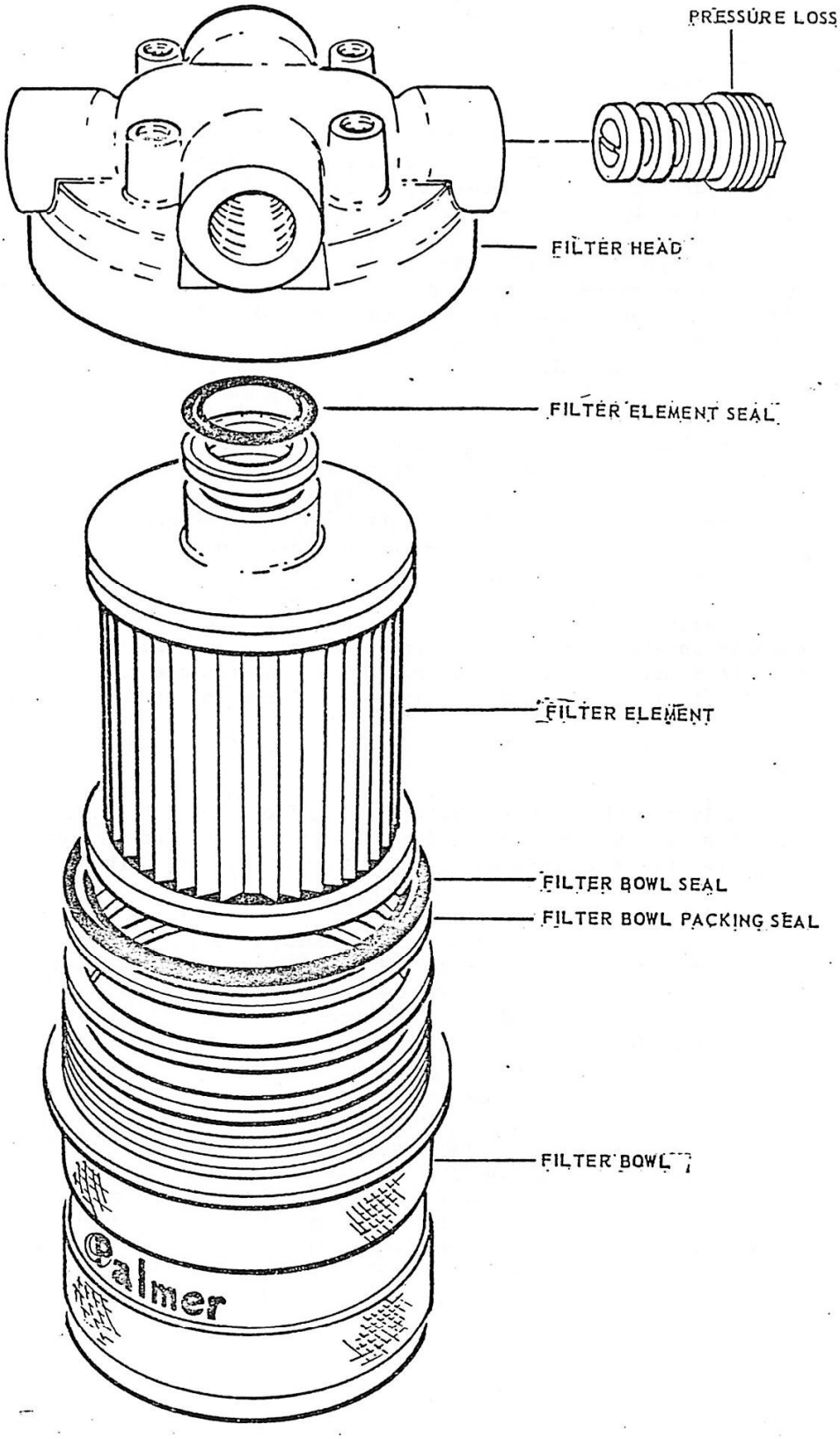

FIG.15 MAIN HIGH PRESSURE FILTER

4.3.2. (contd).

and bowl are two sealing rings. Due to the construction of the filter element it should only be necessary to hand tighten the filter bowl into the filter head for servicing procedures.

Filter Element.

The filter element is made up of finely woven stainless steel wire cloth pleated across its length to form fins. The fins are welded together and secured in end plates forming a cylinder. One end plate accommodates a threaded male portion allowing the element to be screwed into the filter bowl and the opposite end plate has a hollow boss to allow a flow of filtered fluid into the system.

4.3.3. Operation.

The hydraulic oil flows into the inlet port in the head and down into the bowl. It then passes through the filter element from outside to inside, leaving the particles of dirt it has collected on the outside of the filter element, up a hole in the centre of the head and out through the outlet ports. Passages inside the head connect the upstream and downstream pressures to the pressure loss indicator. When the difference between these pressures reach a predetermined value, due to the filter element being clogged, the magnetic piston moves away from the pole piece and releases the red warning button which is pushed out of the end of the indicator casing by its spring. At low temperatures when the pressure differential is high due to the viscosity of the oil, the bi-metallic sleeve grips the button and prevents it from moving.

4.3.4. Filter Element Cleaning.

In the event of the filter element becoming blocked, there is no provision for 'In Service' cleaning. The element must be returned to the manufacturer for ultrasonic cleaning and testing.

4.3.5. Clogging Indicator Assembly.

No attempt should be made to dismantle, service or repair this assembly as NO REPAIRS are permissible.

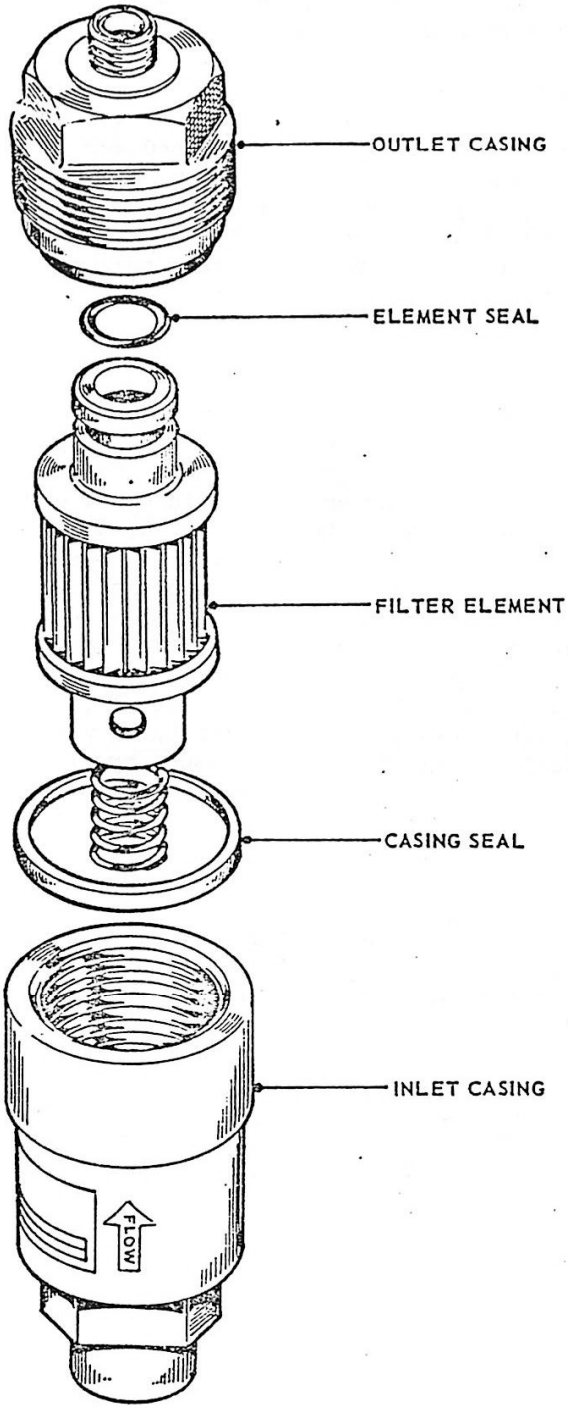

FIG. 16 HAND PUMP FILTER

4.4. Palmer Hand Pump High Pressure Filter.

4.4.1. Description.

The hand pump high pressure filter is of similar design to the main high pressure filter, with varying differences in the outlet casing and filter bowl; it has no provision for a 'tell-tale' clogging indicator. The filter comprises of three sub-assemblies:-

Inlet Casing:

The inlet casing forms the filter bowl in which the filter element is housed. It is screwed into the top or outlet casing with suitable seals fitted between the screwed threads of the casing to ensure no fluid seepage when the filter is assembled.

Outlet Casing:

The outlet casing is so designed to receive the boss of the filter element with a threaded connection on the casing enabling the filter to be installed as an inline filter.

Filter Element:

The filter element is manufactured of finely woven stainless steel wire cloth to a Ten microns absolute filtration standard. Its wire cloth is pleated across its length to form fins. The fins are welded together and secured to two end plates forming a cylinder. Each end plate has a boss, the bottom boss is recessed to take a spring and has radial drillings which form passageways for fluid to be directed through to the filter element. The second boss on the opposite end plate is hollow and permits filtered fluid to pass into the system.

4.4.2. Operation.

Hydraulic fluid flows into the inlet port of the casing and through the radial holes in the boss at the end of the filter element plate to the outside of the element. It then passes through the filter element from outside to inside leaving any particles of dirt that it may contain on the outside of the filter element, and out through the outlet port in the outlet casing.

4.4.3. Filter Element Cleaning.

In the event of the filter element becoming blocked there is no provision for 'In Service' cleaning. The element must be returned to the manufacturer for ultrasonic cleaning and testing.

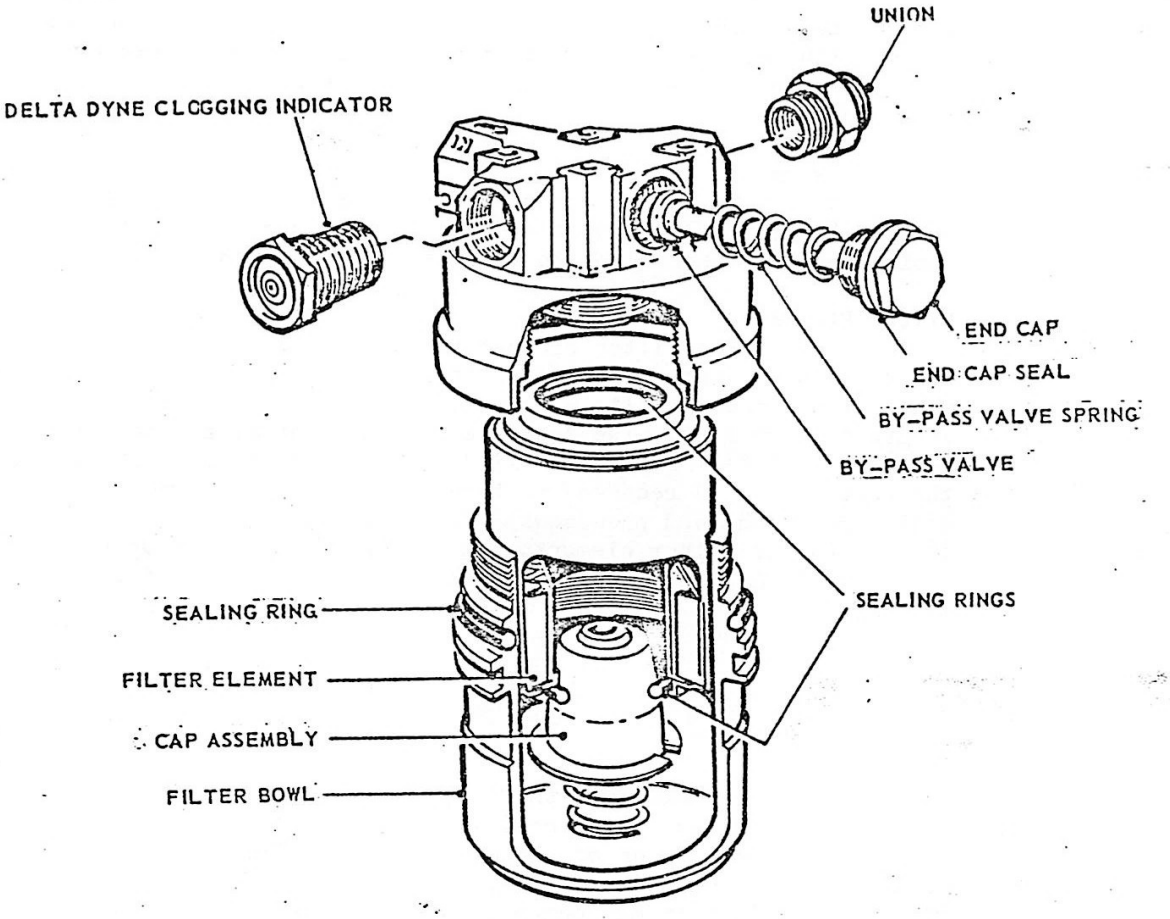

FIG. 17 LOW PRESSURE FILTER (RETURN TO RESEVOIR)

4.5. Fairey Low Pressure Filter. (Return to Reservoir).

4.5.1. Description.

The filter assembly is capable of filtering fluid passed through it to a 3 micron absolute standard, and incorporates a by-pass facility. The filter comprises of four sub assemblies:-

Filter Head:

This contains four threaded ports which are utilised for an inlet and outlet connection, a differential pressure indicator unit and a relief assembly.

Differential Pressure Indicator (Pressure Loss).

Commonly known as a clogging indicator which is a complete assembly, installed in the filter head in a horizontal position; opposite the relief valve assembly. It comprises of a magnetic piston held against a pole piece by a spring. At the other end of the pole piece is a RED warning button held onto the pole piece by an attracting magnetic force. A lightly compressed spring tends to push the button away from the pole piece and a bi-metallic sleeve around the RED warning button prevents it from giving a false indication of clogging when the oil temperature is low. Two types of 'tell-tale' deltadyne indicators can be found in service Magnetic or Torsion Rod. The final result of indication being exactly the same.

Filter Element Assembly:

The filter element assembly is a disposal type. It consists of a resin bonded glass and fibre element supported on a perforated metal tube with two end caps which form the seal housing. A perforated metal shroud is swaged over the outside of the element, thus forming a rigid assembly, and prevents the element from collapsing under excessive pressures.

Filter Bowl:

The filter bowl houses the filter element, and contains a spring loaded cap assembly which fits into the filter element forming a seal at one end. On the outside of the bowl, an external thread enables the bowl to be secured to the filter head, and two serial numbers annotated on the filter bowl and the filter head must be identical, as these items have a manufacturers life limitation of 6 years.

4.5.2. Operation.

Normal Flow - Under conditions of normal flow, fluid enters the filter bowl via the inlet port, passes through the filter element from outside to inside the central tube, leaving any contaminate that it may contain on the OUTSIDE of the element and in the filter bowl.

Element Clogging - During service, if the filter element begins to clog, the pressure differential across the element will increase. This difference between inlet and outlet pressure is felt across the piston of the differential pressure indicator and when the differential pressure increases to $50 \pm 7\frac{1}{2}$ p.s.i. (3.3 ± 0.5 bar) the piston, which is magnetic, moves against its spring away from the indicator button which is also magnetic. The magnetic attraction between the piston and indicator button now reduces to a point where the button spring can assert itself and force the button to protrude from the filter body. When, subsequently, the pressure difference reduces, the piston will return to its normal position; the button spring, however, will retain the indicator in the actuated position showing that the filter element requires replacing. Resetting of the indicator button is achieved by light finger pressure.

By-Pass Condition - If the filter element should clog, provision is made for unfiltered fluid to pass into the system. This is achieved by the by-pass valve assembly opening when a pressure differential of 59 p.s.i. is exceeded. Fluid will now by-pass the element and pass into the system unfiltered. But the by-pass valve is so arranged that the possibility of trapped contaminants passing into the system is avoided.

Low Temperature Conditions. - Due to the higher viscosity of cold fluid, large differential pressure may be developed even with a clean element. To prevent false button indications under these conditions a bi-metallic device is fitted within the indicator housing and is preset to prevent button operation below a temperature of between 20 - 25° C.

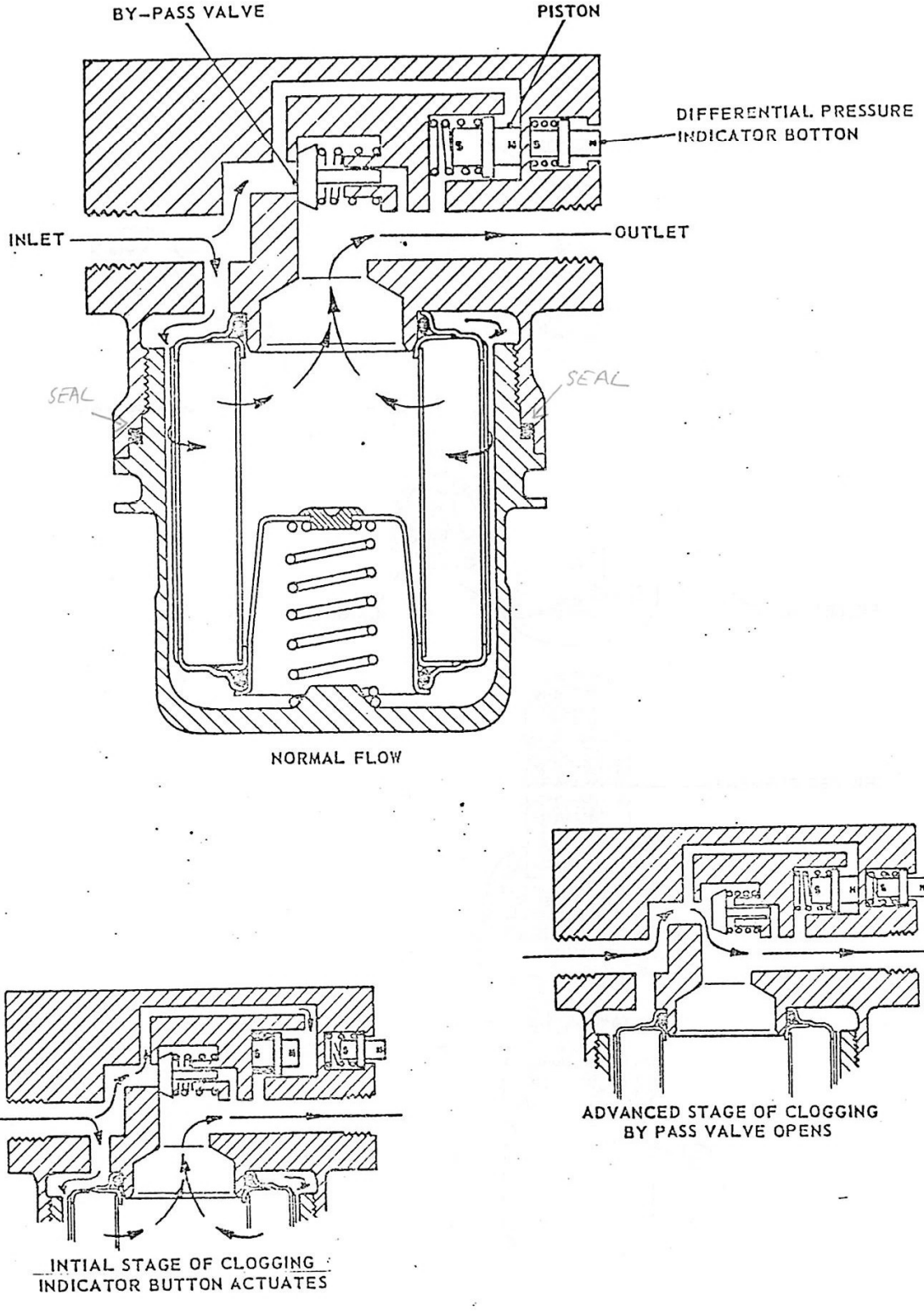

FIG. 18 FAIREY LOW PRESSURE FILTER CLOGGING MECHANISM

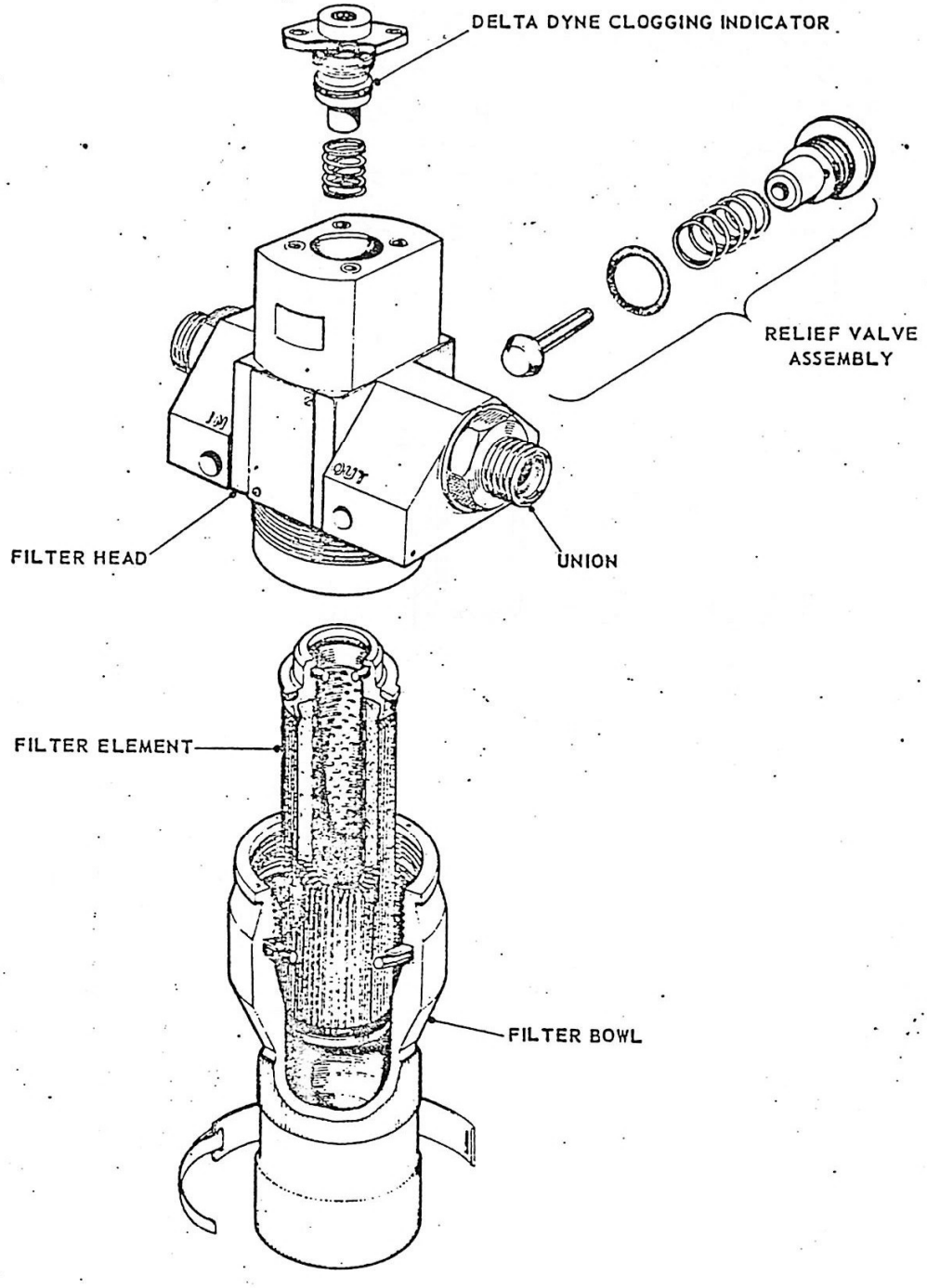

FIG. 19 CASE DRAIN LOW PRESSURE FILTER

4.6. Fairey Low Pressure Filter. (Case Drain Line).

4.6.1. Description.

This filter assembly is capable of filtering fluid passed through it to a 3 micron absolute standard, and incorporates a by-pass facility. The filter comprises of four sub assemblies:-

Filter Head:

This contains three threaded ports which are utilised for an inlet and outlet connection, and a relief valve assembly. It also houses on the top of the filter a differential pressure indication assembly.

Differential Pressure Indicator (Pressure Loss):

Commonly known as a clogging indicator which is a complete assembly, installed in the filter head in a vertical position. It comprises of a magnetic piston held against a pole piece by a spring. At the other end of the pole piece is a RED warning button held onto the pole piece by an attracting magnetic force. A lightly compressed spring tends to push the button away from the pole piece and a bi-metallic sleeve around the RED warning button prevents it from giving a false indication of clogging when the oil temperature is low.

Filter Element:

The filter element assembly is of the disposable type. It consists of a stainless steel fibre element, supported on a perforated central tube with light alloy caps. One end is completely closed by one cap whilst the other cap carries a housing for a sealing ring.

Filter Bowl:

The filter bowl which has an internal thread to enable it to be screwed into the filter head, houses the filter element. It also has a serial number which must coincide with the filter head serial number, because the complete filter assembly has a manufacturers life limitation of 6 years.

4.6.2. Operation.

Normal Flow - Under conditions of normal flow, fluid enters the filter bowl via the inlet port, passes through the filter element from outside to inside the central tube, leaving any contaminate that it may contain on the OUTSIDE of the element and in the filter bowl.

Element Clogging - During service, if the filter element begins to clog, the pressure differential across the element will increase. This difference between inlet and outlet pressures is felt across the piston of the differential pressure indicator and when the differential pressure increases to 25 p.s.i. the piston, which is magnetic, moves against its spring away from the indicator button which is also magnetic. The magnetic attraction between the piston and indicator button now reduces to a point where the button spring can assert itself and force the button to protrude from the filter body. When, subsequently, the pressure difference reduces, the piston will return to its normal position; the button spring however, will retain the indicator in the actuated position showing that the filter element requires replacing. Resetting of the indicator button is achieved by light finger pressure.

By-Pass Condition. - If the filter element should clog, provision is made for unfiltered fluid to pass into the system. This is achieved by the by-pass valve assembly opening when a pressure differential of 30 p.s.i. is exceeded. Fluid will now by-pass the element and pass into the system unfiltered. The by-pass valve is so arranged that the possibility of trapped contaminants passing into the system is avoided.

Low Temperature Conditions. - Due to the higher viscosity of cold fluid, large differential pressure may be developed even with a clean filter element. To prevent false button indications under these conditions a bi-metallic device is fitted within the indicator housing and is preset to prevent button operation below a temperature of between 20 - 25° C.

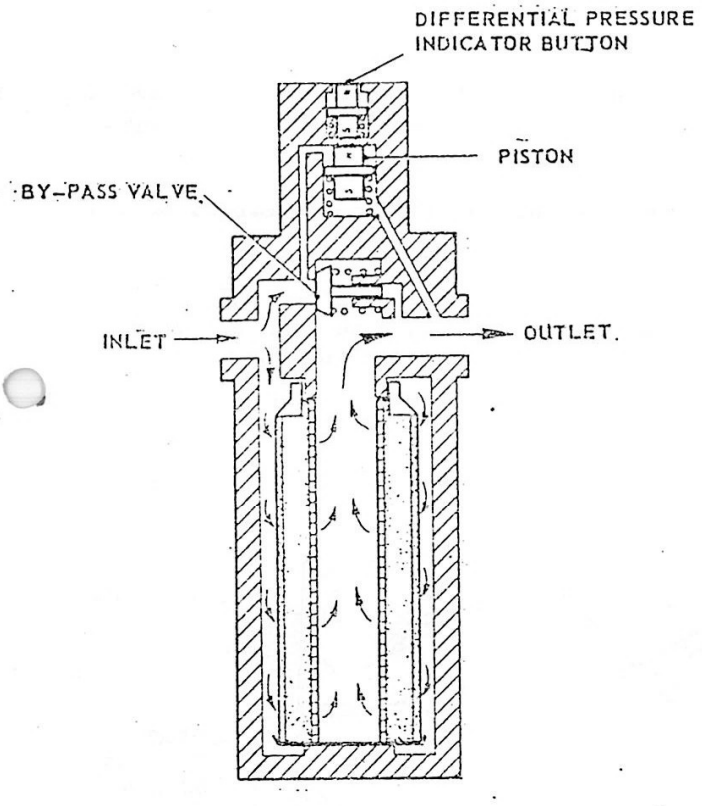

NORMAL FLOW

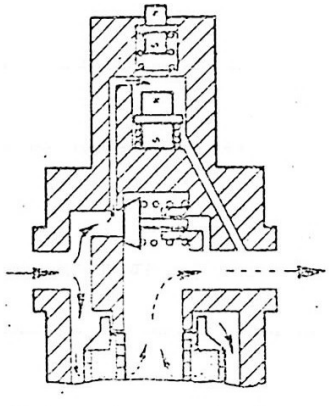

INTIAL STAGE OF CLOGGING
INDICATOR BUTTON ACTUATES

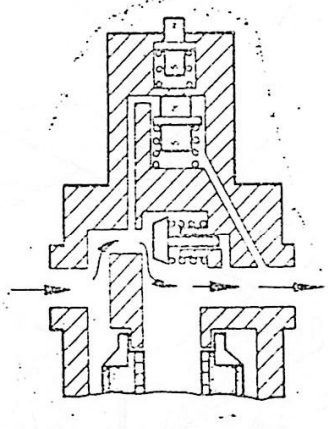

ADVANCED STAGE OF CLOGGING
BY PASS VALVE OPENS

FAIREY L.P.FILTER CLOGGING MECHANISM (CASE DRAIN)

FIG.20

4.7. Heat Exchanger.

4.7.1. Description.

The fuel cooled heat exchangers fitted in the Port and Starboard airbrake compartments is installed to reduce hydraulic fluid temperatures during the hydraulic pump off load cycle.

The heat exchanger utilises the engine delivery fuel flow as its cooling medium and drops the E.D.P. case drain hydraulic oil temperature by approximately 25° C.

It is fitted in the E.D.P. case drain line to the E.D.P. suction line.

The unit is fabricated from various gauges of light alloy sheet, surface treated as necessary and welded together to form a matrix. The unit is designed to withstand pressures of up to 150 p.s.i. and temperatures to a maximum of 125° C.

RADIATOR
N°1 AIR BREAK WELL
N°2 AIR BREAK WELL

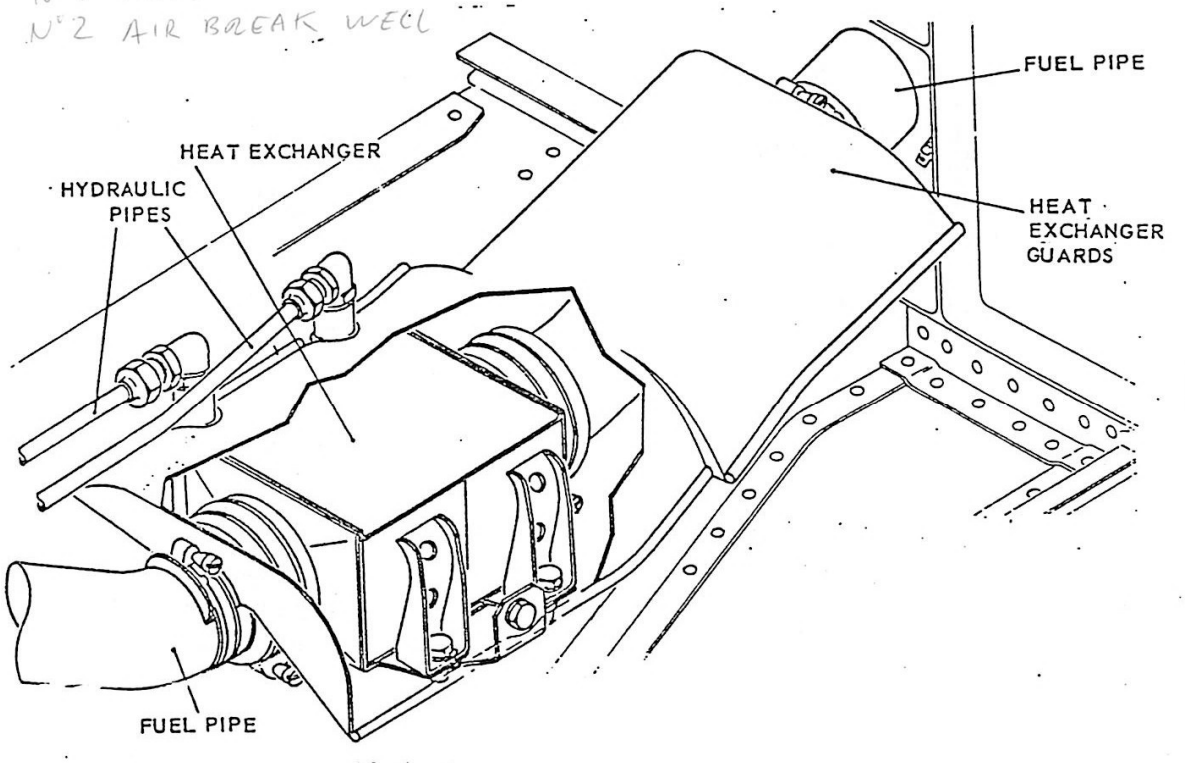

FIG.21. HEAT EXCHANGER

4.8. Hydraulic Pump By-Pass Valve.

4.8.1. Introduction.

The Pump By-Pass Valve or Dump Valve is an electrically operated valve to relieve the main hydraulic pressure back to return during certain ground and flight conditions.

The valve is operated by a switch from the cockpit giving both Manual and Auto selection. The auto-switch operates below an engine r.p.m. of 42% and the manual is supplementary to the auto.

In case of an engine 'flame-out' the Electro-Hydraulic By-Pass valve allows hydraulic pressure from the pump direct to return, off-loading the pump, allowing rapid engine pick-up during 'relight' and is also used during normal engine starts.

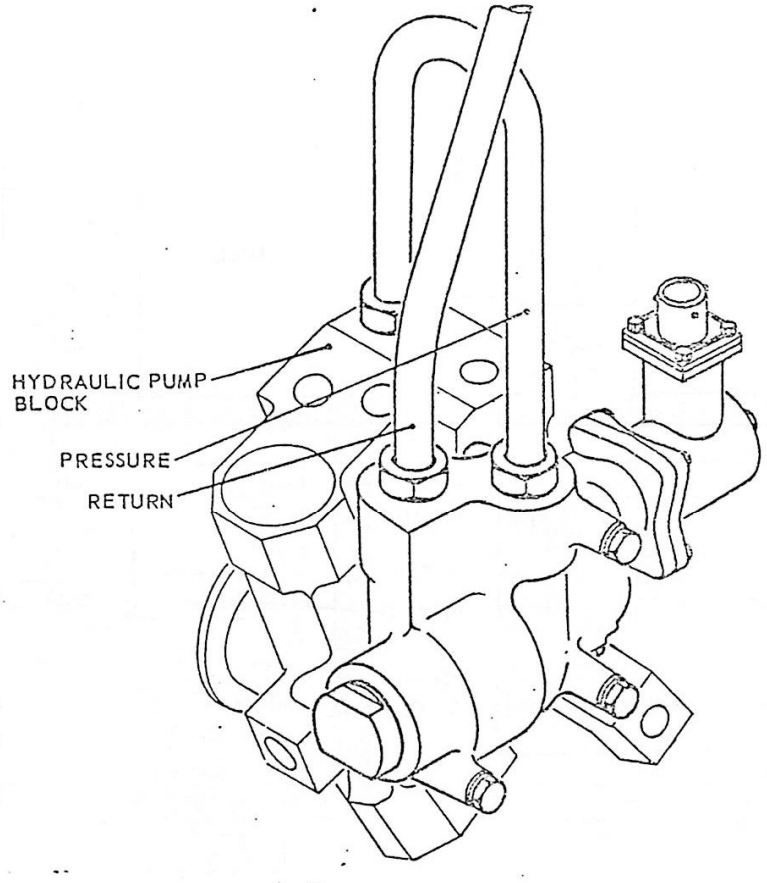

FIG.22. HYDRAULIC PUMP BY-PASS VALVE

4.8.2. Description.

ENGINE BAY

The body of this unit houses two valves i.e. a piston type valve and a pilot valve, both connected by fluid ways to pipe adaptors which provide for connection purposes. The unit has no neutral position and the flow of fluid is controlled by a piston type valve actuated by the fluid pressure diverted, as required, by a solenoid-operated pilot valve.

The pilot valve assembly comprises of a spring, filter, two sealed valve seats and a spacer, shimmed for fitted spring length and ball movement. A push rod locates through the spacer and the outer valve seat to contact a ball valve which operates between the two seats. Centrally surmounting the pilot valve assembly is a solenoid with its spring-loaded armature contacting the end face of the pilot valve push rod which it depresses to actuate the pilot valve when energised. A sealed screw in the solenoid provides for adjustment, while a plug receptacle is retained by four cap screws to receive the plug carrying the electrical supply from the aircraft to the unit.

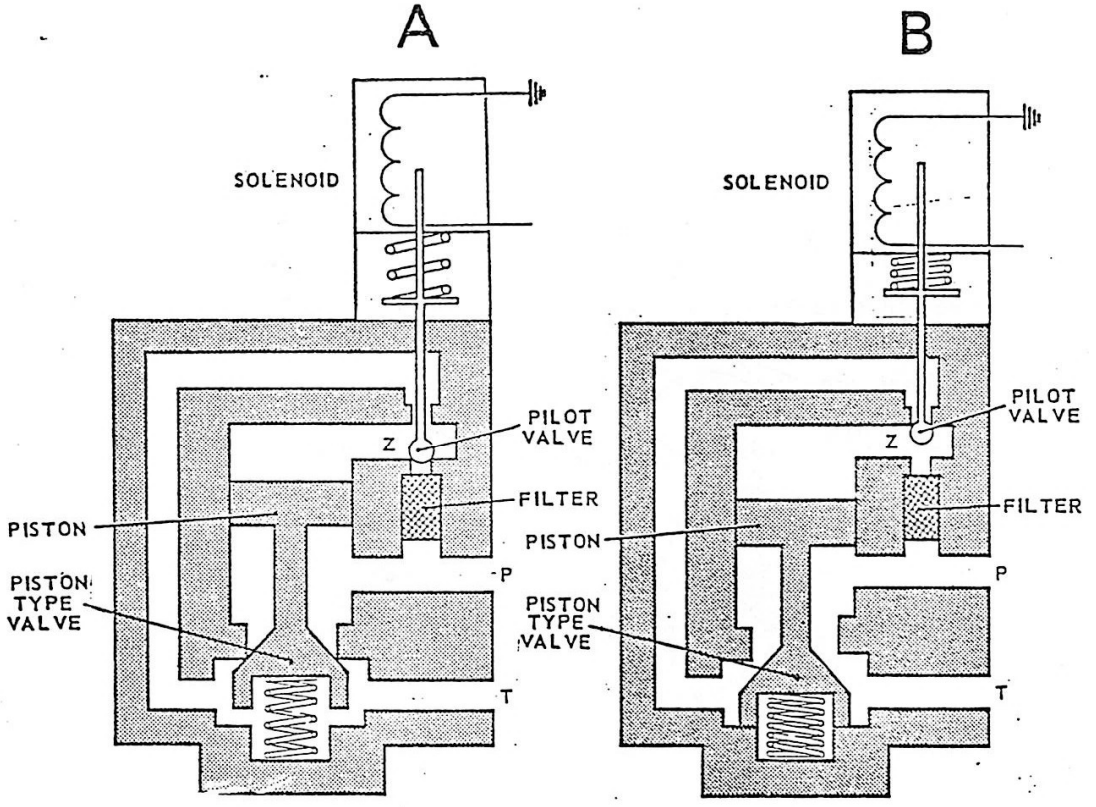

FIG. 23 HYDRAULIC PUMP BY-PASS VALVE-SCHEMATIC

4.8.3. Operation.

VALVE CLOSED.

When the solenoid is de-energised (FIG 23A) the solenoid armature is extended by its spring to thrust the ball valve against the inner valve seat. Supply fluid is thus cut off from duct Z and fluid pressure acts on the reduced area face of the valve piston, thus closing and retaining the spring loaded valve against its seat. Fluid pressure from the full area face of the piston is relieved via duct Z and the ball valve to the bore of connection T.

The position of the cockpit selector switch - the Hydraulic By-Pass Switch for that particular system will be in the 'OFF' position with the Port/Starboard Engine stationery or selected to 'AUTO' with the engine R.P.M. above 42%.

DE-ENERGIZED CLOSED

VALVE OPEN.

When the solenoid is energised (FIG 23B) the solenoid armature is withdrawn from the ball valve. Fluid from the supply connection flows through the filter and the inner valve seat, forces the ball against the outer valve seat and flows thence via duct Z to act on the full area face of the valve piston to force the valve off its seat and allow the passage of fluid from connection P to T.

The position of the Hydraulic By-Pass Switch in this instance will be in the 'ON' position with the PORT/STARBOARD Engines stationary or selected to AUTO with the engine R.P.M. below 42%.

ENERGIZED OPEN

4.9. Pressure Switch. OPERATED BY PRESSURE 1550±155

4.9.1. Introduction.

The Thermal Control Pressure Switch installed in the hydraulic pump high pressure delivery pipe line has two functions:-

Indicates a RED warning caption in the Centralised Warning Panel of Hydraulic Pump Pressure Failure.

To connect into the aircraft Emergency Hydraulic Pump automatic electrical circuit, arming an electrical relay.

4.9.2. Description and Operation.

The pressure switch, comprises a base and pressure plate assembly with a diaphragm that deflects under pressure to operate a mechanism controlling the contacts of a microswitch connected to a three-pole electrical plug on the case.

The pressure switch operates to make with a fall in hydraulic pressure of 1550 ± 155 p.s.i. A pressure is applied to the base, the diaphragm deflects to raise the operating pin in the pressure plate and rotate the operating arm about the pivots against the spring tension. As the operating arm is pivoted the operating screw is lowered until the microswitch is actuated. Conversely, as the applied pressure is reduced, the operating arm rotates under the spring load and raises the operating screw to actuate the microswitch at the specified operating pressure setting.

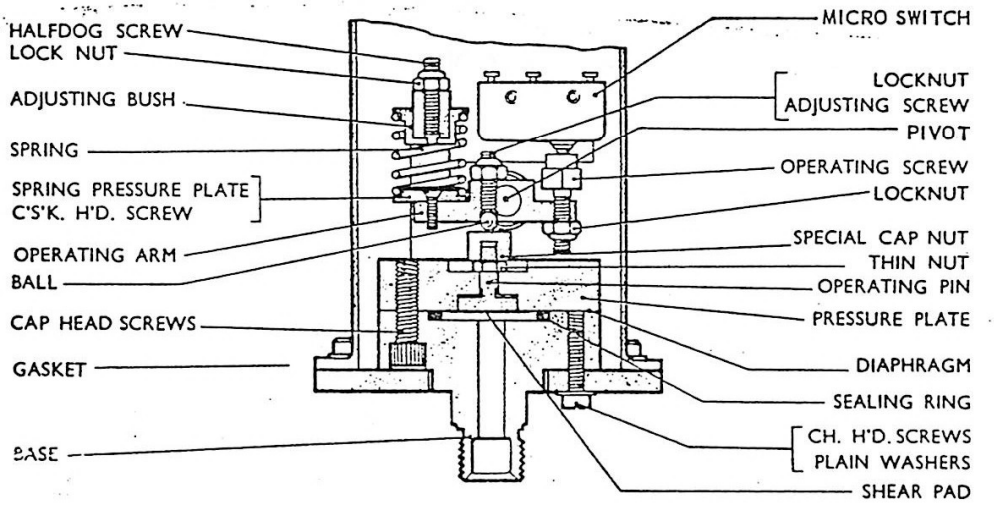

FIG. 24 PRESSURE SWITCH.

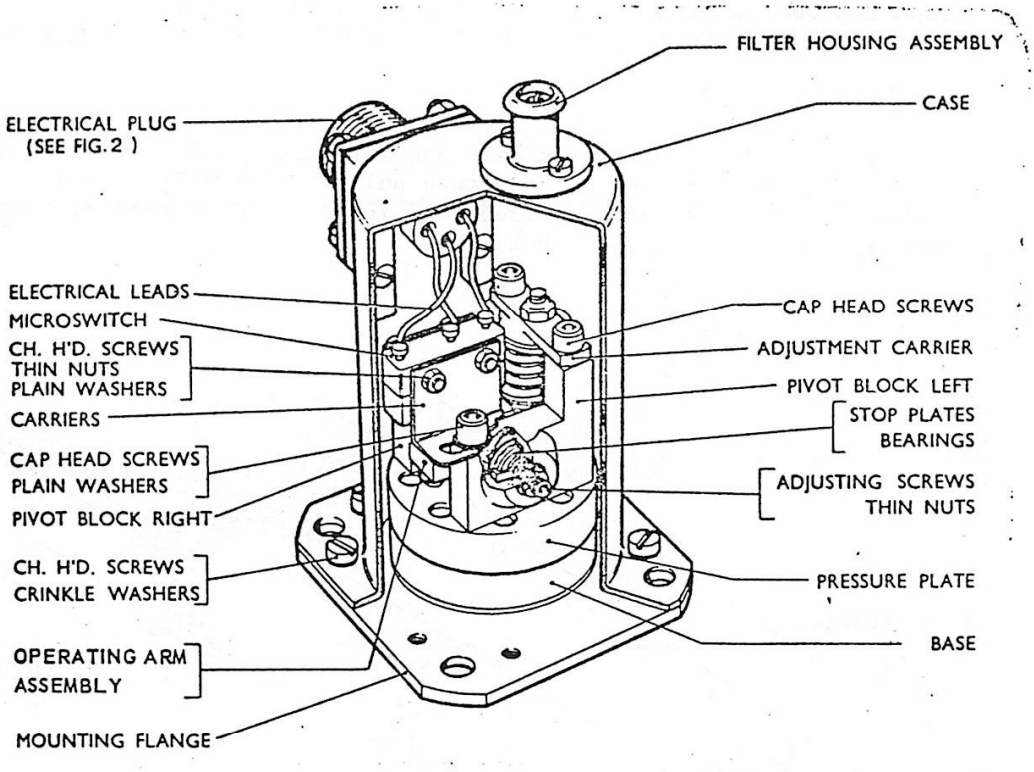

FIG. 25 PRESSURE SWITCH SECTIONAL VIEW

4.10. Hydraulic Accumulators. DAMPER

4.10.1. Introduction & Description.

The number of hydraulic accumulators installed in both No.1. and No.2. Hydraulic systems are four. Two;who's only purpose is to eliminate hydraulic pump pulsations and the remaining accumulators utilised as storage cylinders for particular hydraulic circuits.

Three different types of cylinders are in use, which only differ in as much as storage capacities length and additional or different component parts attached to the cylinder assembly. Internal operations are identical and all are charge with NITROGEN as the gas side of the cylinder seperator piston is lubricated with system type oil.

4.10.2. Main Accumulator.

Both Hydraulic circuits Main Accumulators are in the pump, delivery line to dampen out pressure pulsations from the pump. These accumulators are installed horizintally and charged to a gas pressure of 1500 p.s.i. with Nitrogen.

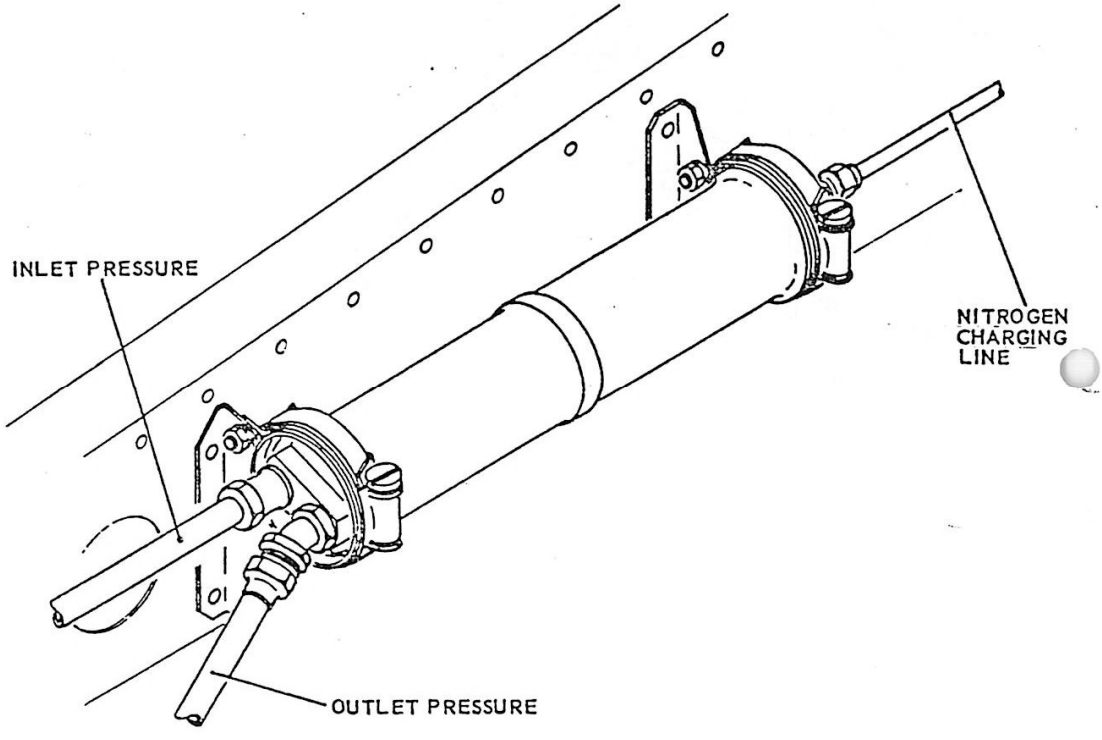

FIG. 26 MAIN ACCUMULATOR INSTALLATION

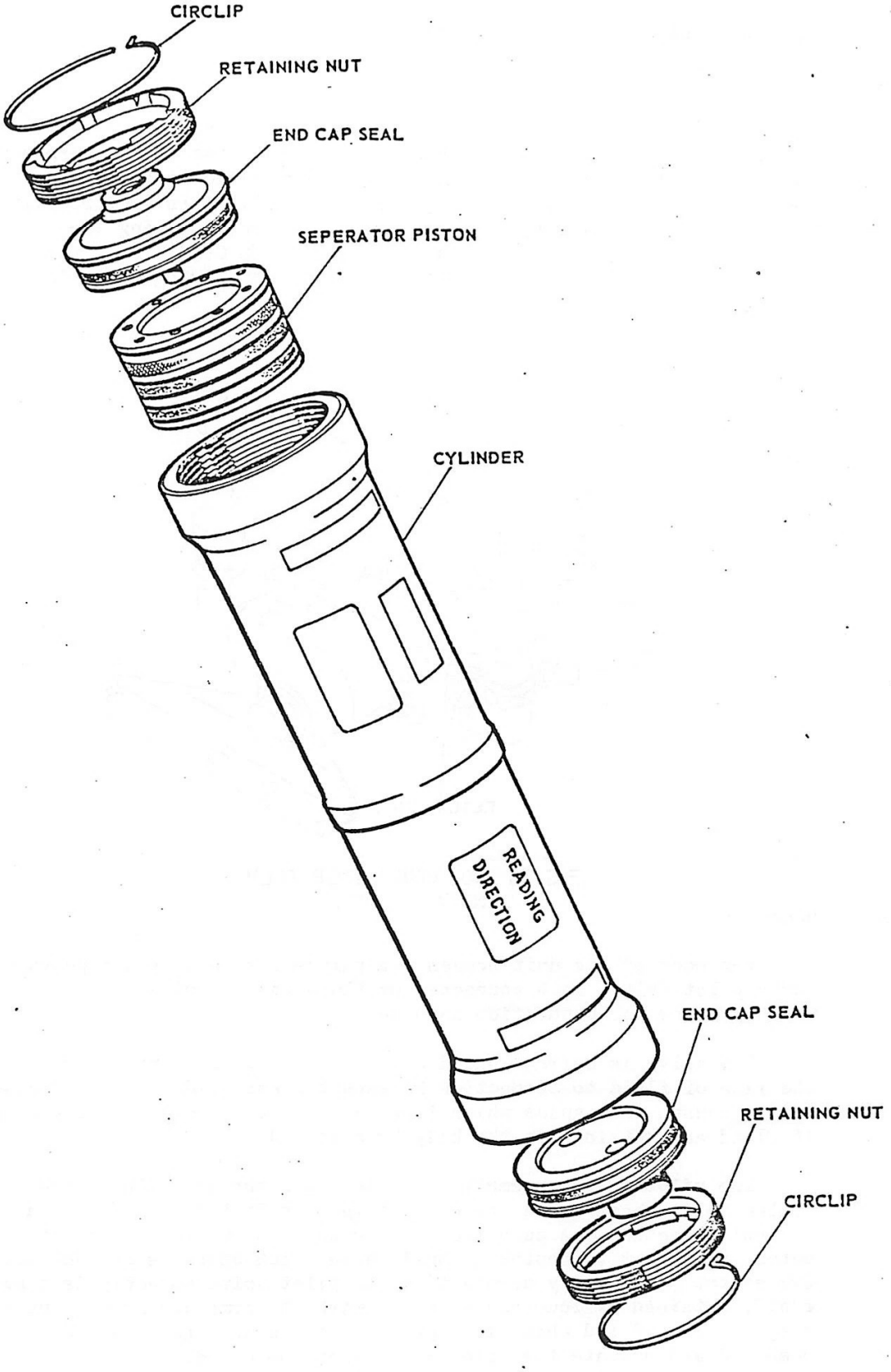

FIG. 27 MAIN ACCUMULATOR

4.11. Services Isolation Valve. STOP VALVE

4.11.1. Introduction.

The Services Isolation or Stop Valve is introduced and used in both No.1. and No.2. Hydraulic Circuits in the event of an emergency occurring. Should the fluid level in the Hydraulic Reservoir leak away and become too low i.e. $1\frac{3}{4}$ pints (1 litre). This electrically selected hydraulically operated valve will CLOSE, stopping the passage of high pressure fluid into the SERVICES CIRCUITS, reserving the remaining fluid for operation of the Primary Flying Controls only.

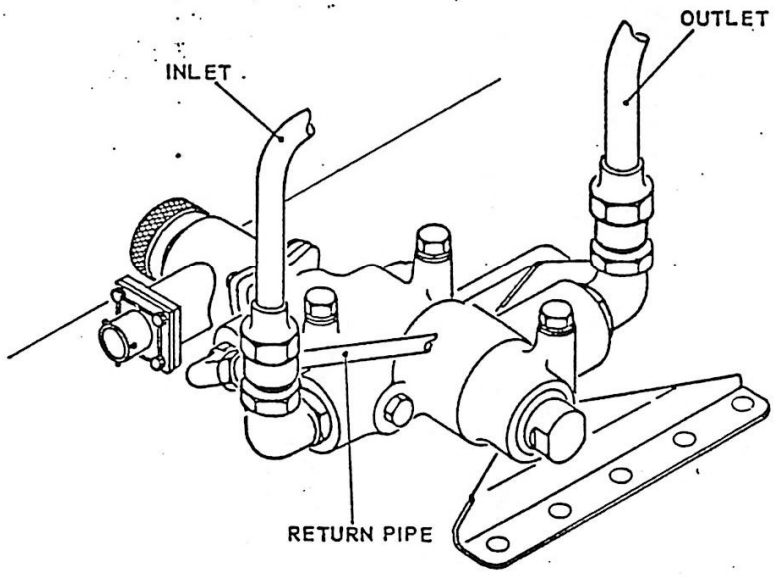

FIG. 28 ISOLATION/STOP VALVE INSTALLATION

4.11.2. Description.

The body of the unit houses two valves i.e. a piston type valve and a pilot valve, both connected by fluid ways to pipe adapters which provide for connection purposes.

The valve is spring loaded against a sealed seat to close off the flow of fluid to connection P2 when the solenoids is de-energised, and is housed in a guide which is provided with holes for the passage of fluid and retained in the body by a sealed end cap.

The pilot valve assembly comprises of a spring, filter, two sealed valve seats and a spacer, shimmed for fitted spring length and ball movement. A push rod locates through the spacer and the outer valve seat to contact a ball valve which operates between the two seats. Centrally surmounting the pilot valve assembly is a solenoid, retained by four cap screws , with its armature screw abutting a spring loaded rod which it depresses to contact the pilot valve push rod and actuate the pilot valve when energised.

4.11.3. Operation.

When the solenoid is de-energised (FIG 29A) the solenoid armature is withdrawn from the Pilot Ball Valve Pressure Seat by the spring loaded rod. Fluid from the supply connection P1 flows through the filter, the Pressure Valve Seat via duct Z to act on the full area of the valve piston to force the valve off its seat and allow the passage of fluid from connection P1 to connection P2.

When the solenoid is energised (FIG 29B) the solenoid armature is forced against the spring loaded rod to thrust the Pilot Ball Valve against the Pilot Valve Pressure Seat. Supply fluid is thus cut off from duct Z and fluid pressure acts on the reduced area face of the valve piston, thus closing and retaining the spring loaded valve against the seat. Fluid pressure from the full area face of the piston is relieved via duct Y and the Ball Valve Rod to the bore of connection T.

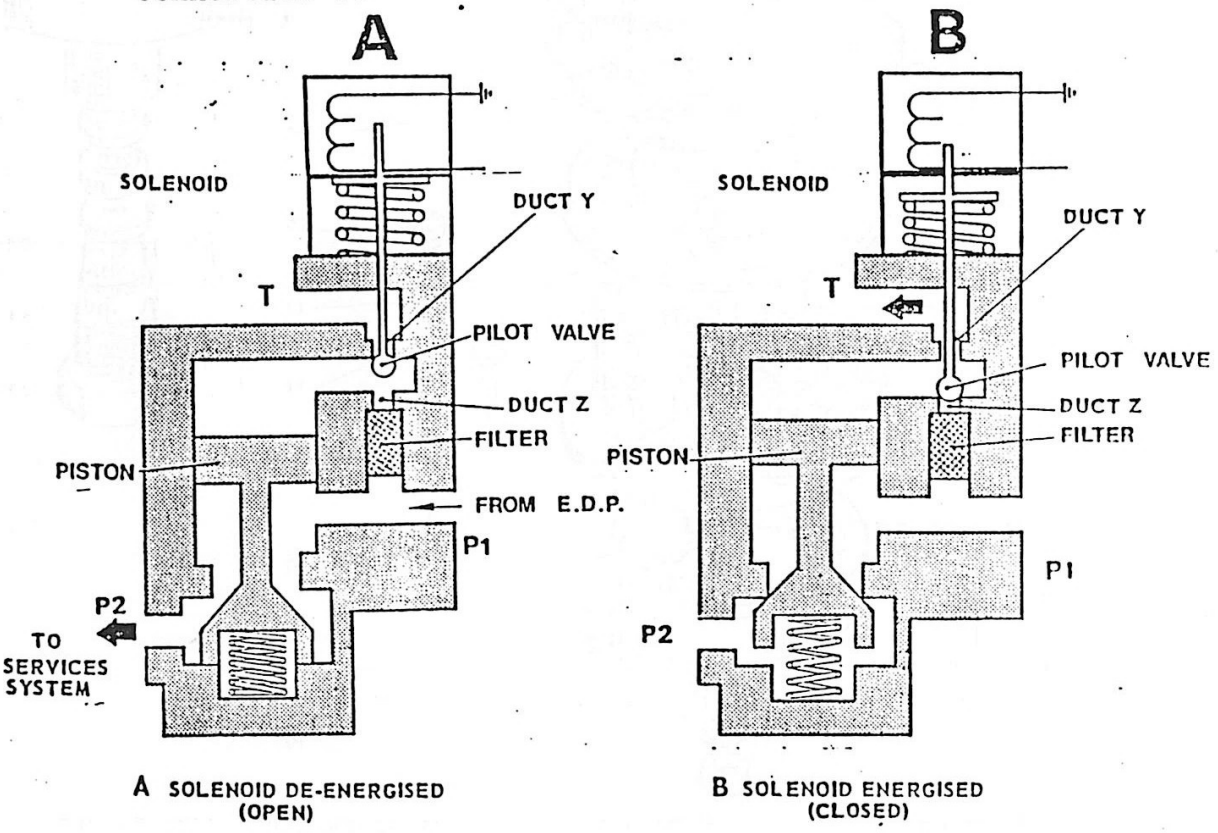

FIG. 29 ISOLATION/STOP VALVE SCHEMATIC DIAGRAM

NOTE: RAFO/STI/JAG/184 introduces a series switch into the cockpit which, in the event of a double isolation valve closure with U/C up, will enable the No 2 isolation valve to be selected 'open' for emergency lowering of the U/C.

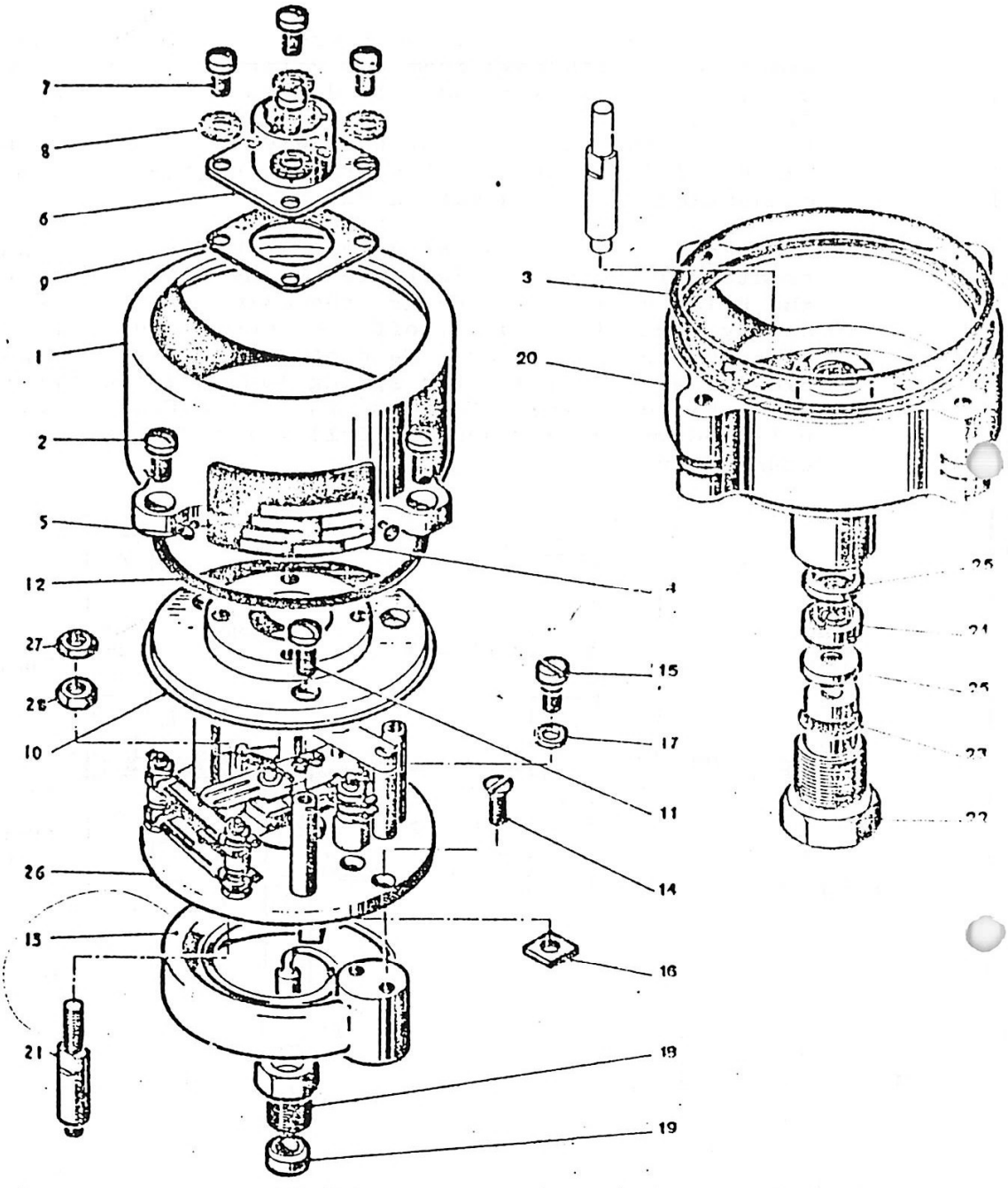

1	COVER	8	WASHER	15	SCREW, LINK	22	NIPPLE
2	SCREW	9	GASKET	16	NUT, SPECIAL	23	RING, SEALING
3	SEAL LEAD	10	ADAPTER	17	WASHER, SPECIAL	24	RESTRICTOR
4	NAMEPLATE	11	SCREW	18	UNION	25	FILTER
5	RIVET	12	RING SEALING	19	SEAL, OVAL	26	POTENTIOMETER UNIT
6	RECEPTACLE, 6 PIN	13	TUBE ASSEMBLY, BOURDON	20	BODY ASSEMBLY	27	NUT
7	SCREW	14	SCREW	21	PILLAR	28	NUT

FIG. 30 PRESSURE TRANSMITTER.

4.12. Pressure Transmitter.

4.12.1. Introduction.

The dual pressure transmitter provides remote information of pressure in both No.1 and No.2. Hydraulic system, servicing controls, or services, to a combined dual pressure indicator located in the cockpit. The pressure indicator is selected by a two position switch enabling either Controls or Services hydraulic pressure to be monitored on its dial. Four pressure transmitters are fitted two to each hydraulic system. The services transmitters are fitted to the rear face of the PORT and STARBOARD undercarriage bays, whilst the controls transmitters are located in the tail section.

4.12.2. Description.

The transmitter consists essentially of a bourdon tube, linkage and potentiometer unit. The potentiometer unit embodies two brush arms which are linked to the bourdon tube in such a manner that an angular displacement of the brush arms will be produced when pressure changes causes the bourdon tube to change shape. The potentiometer unit is electrically connected to two remotely located indicators and translates bourdon tube movements into visual indication of the pressure existing at the point of measurement.

The transmitter comprises two main sub-assemblies: a hydraulic unit and a potentiometer unit.

Hydraulic unit:

This essentially comprises a bourdon tube mechanism which is mounted horizontally on a plate. The bourdon tube mechanism consists of the bourdon tube itself, of oval section, which is made both strong enough and at the same time sufficiently flexible to indicate high pressures. The fixed end of the bourdon tube is brazed into a heavy brass seating which is secured to the plate with two screws. A capillary tube is accommodated inside the seating and terminates inside a threaded union which is screwed into a body assembly. An oval seal is compressed between the union and the body assembly. Inside the pressure inlet is a restrictor which is mounted between two filters to damp out brief fluctuations in the pressure system. The restrictor and the two filters are held in position by a threaded nipple which is screwed into the body assembly. The nipple is grooved to accept a rubber 'O' ring which provides sealing of the pressure inlet.

Brazed to the free end of the bordon tube is a sealing bracket to which the link is attached. The bracket has an elongated hole and fixing of the link is therefore adjustable within the limits of its mounting hole. A stop screw with a locknut is fitted in the plate near the free end of the bourdon tube, as a safeguard against over-loading.

The plate is supported on a pillar which is screwed into the body assembly. On the reverse side of the plate is fitted the potentio-meter unit.

Potentiometer unit:

Within the potentiometer unit a rocking shaft assembly, which moves in response to the action of the link is supported between two pivot screws: The rocking shaft assembly is secured to the link by a special nut and screw which pass through the elongated hole in the bell crank of the rocking shaft. Fixing of the link to the rocking shaft assembly is therefore adjustable within the limits of the slotted mounting hole in the bell crank of the rocking shaft. A bridge forms the pivotal support for the rocking shaft assembly. Two brush arms of the rocking shaft assembly wipe along the slab resistors. Both brush arms are mounted on either side of the rocking shaft, separated and insulated from the rocking shaft by supports made of insulating material, each brush arm is electrically connected to a tag.

The potentiometer unit embodies a spring one end of which is attached to the rocking shaft assembly, the other to an anchorage post on the plate, which assists the rocking shaft assembly to return to the rest position as pressure is withdrawn.

The resistors are separated from each other by spacers located on insulating washers. This assembly and the terminals for the electrical connections are held in position on two pillars.

The leads from the potentiometer unit are connected to the pins of the receptacle which is attached to an adaptor with four screws and lockwashers. A sealing gasket is fitted beneath the flange of the receptacle. The complete assembly is protected by a cover secured to the body assembly by four screws.

4.12.3. Operation.

Pressure is transmitted through the restrictor and capillary tube to the bourdon tube. An alteration in the pressure of the fluid in the bordon tube will cause a change in its radius. A rise in pressure causes an increase in radius and conversely a fall in pressure causes a decrease in radius.

The resultant movement of the free end of the bourdon tube is conveyed through its link to the rocking shaft of the potentiometer unit, which carries the two brush arms.

Each brush arm moves along a resistor to divide the resistance into varying proportions and corresponding currents are fed to the associated indicator, thus altering the indicated pressure reading.

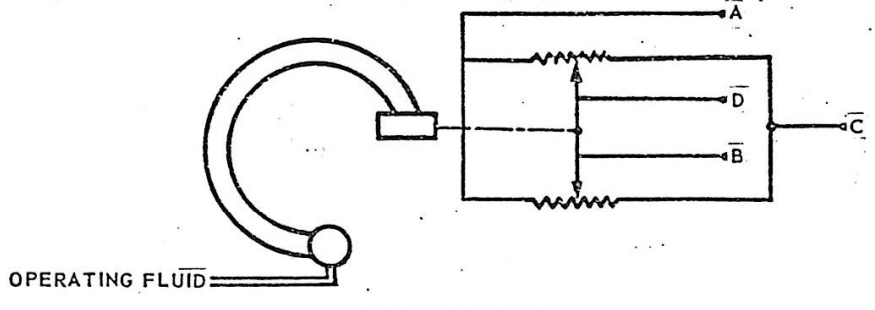

FIG. 31. PRESSURE TRANSMITTER ELECTRICAL

4.13. Sampling Valve.

4.13.1. Introduction.

The Fairey sampling valve is fitted in the Return line, before the return filter, and is incorporated to enable fluid samples to be taken for fluid contamination checks.

The valve enables samples to be drawn from the system at a flow rate of between 50 and 150 cm^3/minute irrespective of system pressure.

4.13.2. Description.

The valve mainly comprises a body, a sampling plug and a shut-off valve. A labyrinth assembly is used to reduce the velocity of the drawn-off fluid and, to ensure that the labyrinth is not blocked by large particles of foreign matter, a filter is used at the inlet.

4.13.3. Operation.

To obtain the sample, the valve bowl is first removed and then, with the system active, the sampling plug is unscrewed 1 1/2 to 2 turns. This action will part the lapped mating faces of the shut-off valve and sampling plug. Fluid will now flow through the labyrinth. This latter, being the equivalent of a long small bore, reduces the velocity of the fluid and allows samples to be drawn from the system at a rate between 50 and 150 cm^3/minute. Flow is now through the four holes in the shut-off valve and out via the centre hole in the plug. To stop the flow, the plug is screwed fully in and the valve bowl re-fitted to protect and seal the outlet.

4.13.4. Special Instructions.

Matched assembly:

The labyrinth assembly plug and sleeve are mated and identified by comparable markings at initial assembly. They must be kept together or renewed as a matched assembly.

Precision finish:

The sampling plug and shut-off valve mating faces are precision finished; they must be handled with extreme care.

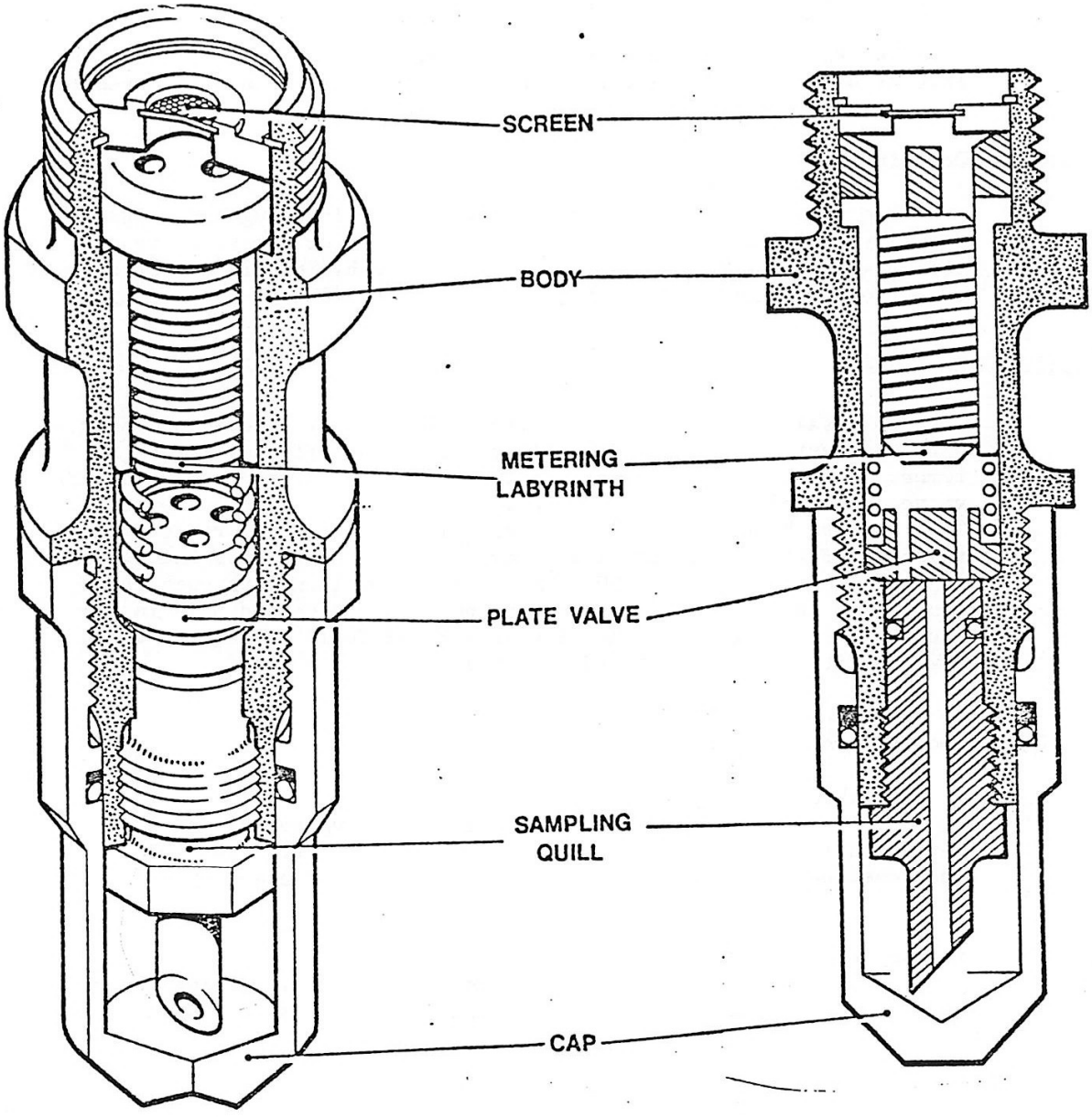

FIG.32 SAMPLING VALVE

4.14. Ground Connections.

4.14.1. Introduction.

The Ground Connections are self-sealing valves the purpose of which is to enable quick disconnection or connection of two sections of a hydraulic line. It ensures automatic blanking of two separate parts (removable and fixed parts) and thus prevents any loss of fluid.

Three quick release Ground Test connections are fitted to each power circuit to facilitate ground operation if circuits during servicing. The Hydraulic Engine Driven Pumps are also fitted with this type of connection.

4.14.2. Description.

The range of 'Minilock' self-seal quick release couplings are manufactured from stainless steel and are of similar design and operation, differing only in dimensions.

Each nipple and socket assembly contains a valve which is spring loaded to close off the bore of the coupling when in the disengaged (disconnected) condition. Each nipple and socket will remain leak-proof at all system pressures up to the maximum working pressure.

The act of coupling a nipple to a mating socket opens both valves to permit fluid flow and it is arranged that sealing between the nipple and socket is effected before the valves are opened so preventing any fluid loss.

The socket carries the automatic coupling locking device. This is essentially a captive ring of steel balls contained between the socket valve and the locking ring. Complete insertion of the nipple into the socket allows these balls to drop into a circumferential groove around the nipple body. When the balls drop into this groove, the spring loaded locking ring is able to move axially over the balls to retain them in position, and then radially. The radial movement effects a positive lock against inadvertant withdrawal of the locking ring which would cause disconnection of the nipple and socket.

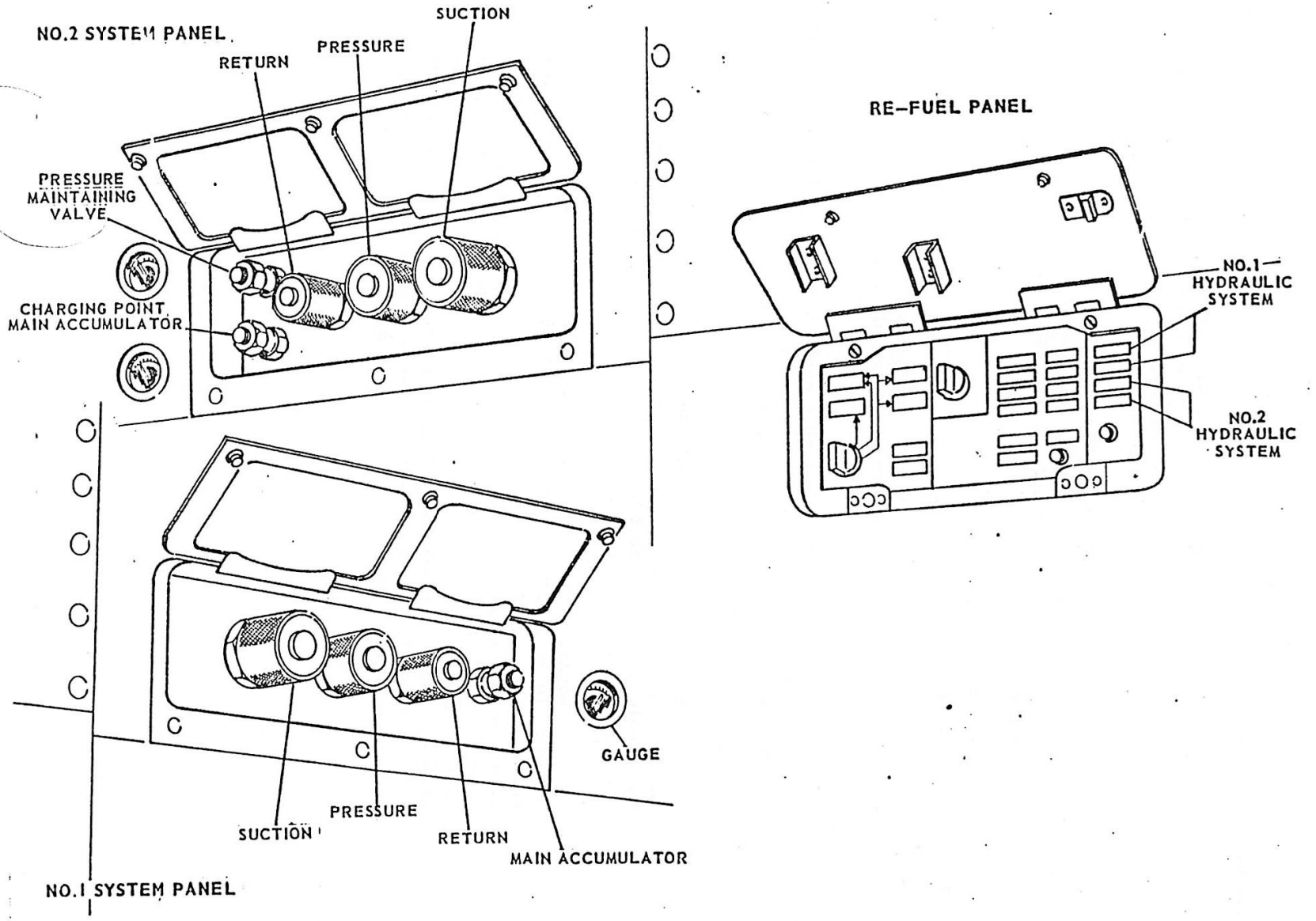

FIG.33 HYDRAULIC GROUND CONNECTIONS

4.15. Hand Pump.

4.15.1. Introduction.

A small capacity hand pump is fitted in each circuit supplying pressure to the 'services' side of the system only. They are located at the forward end of each engine bay and are therefore for ground use only. The stowage for the hand pump detachable handle is in the main undercarriage leg fairing door, Port Side.

This hand pump is of the double action type. It sucks the fluid contained in a tank and discharges at a low delivery rate towards the service system, thus providing the energy necessary to operate the components included in a hydraulic system. The hand pump is generally used for ground servicing only.

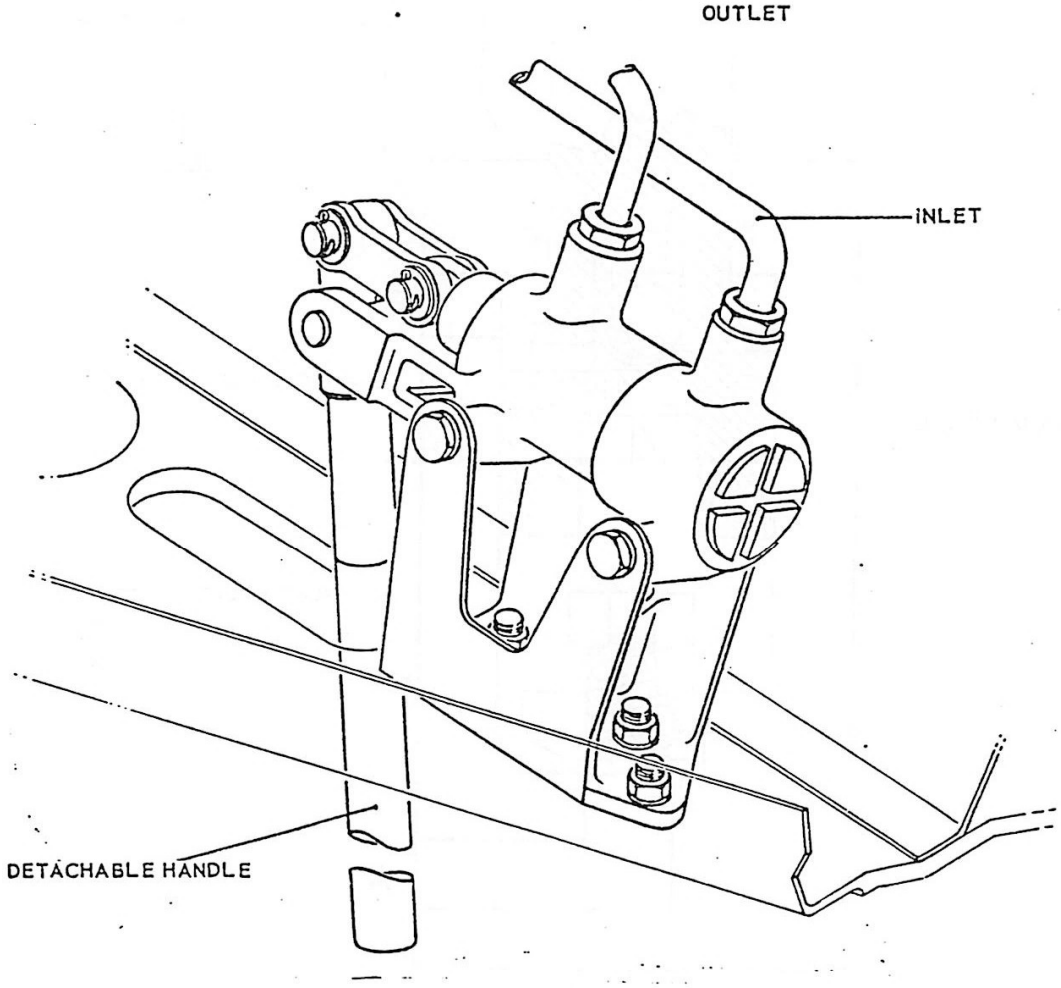

FIG. 34 HAND PUMP INSTALLATION

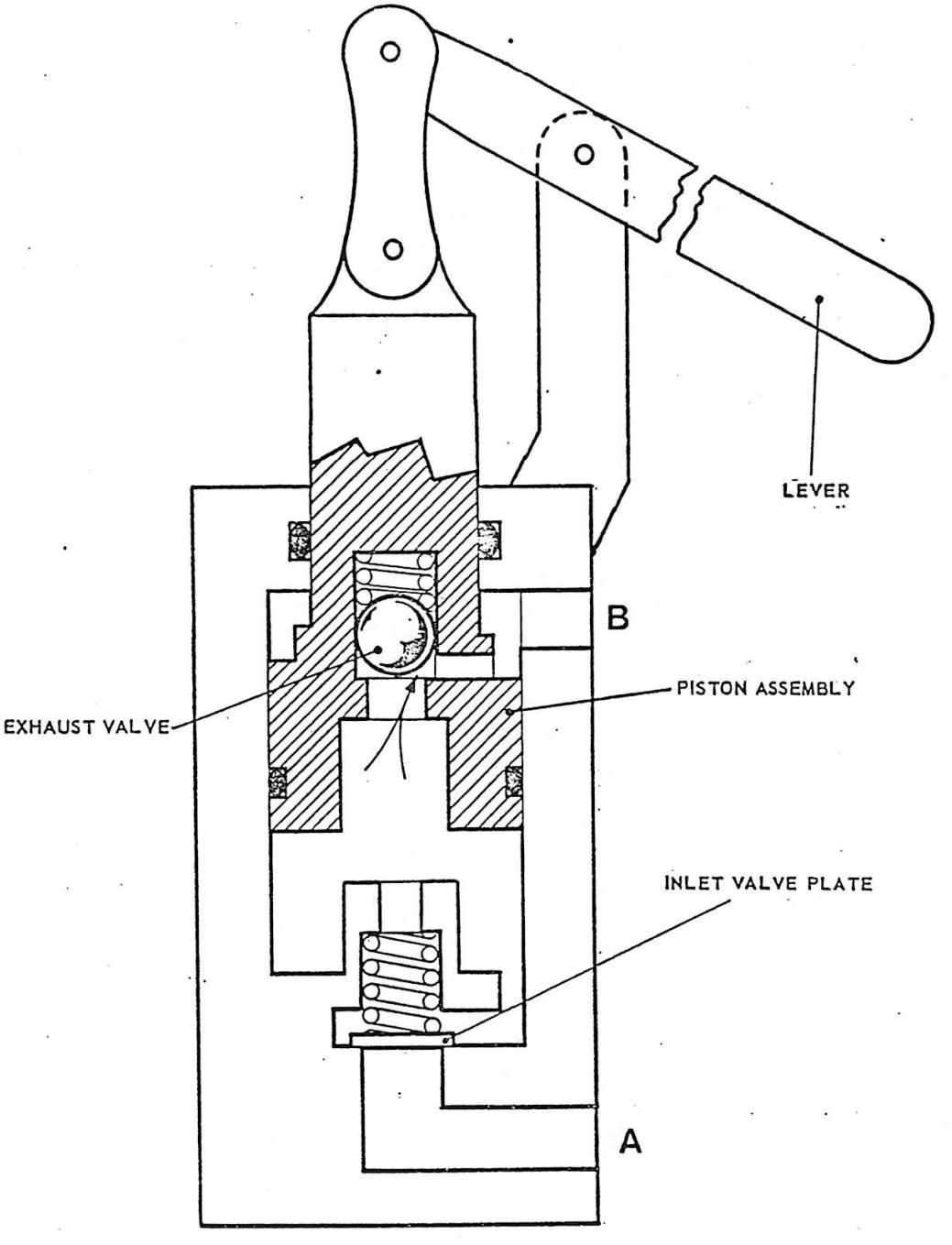

FIG. 35 HYDRAULIC HAND PUMP.

4.15.2. Description.

The hand pump consists of a light alloy body with inlet and outlet ports, a piston assembly incorporating a non-return valve and an operating handle.

4.15.3. Operation.

The swivelling of the operating handle about its pivot pins causes displacement of the piston inside the pump body.

The piston retraction causes an increase of volume of the chamber (a). This results in creating a vacuum in this chamber and the suction, through A, of an amount of fluid, through the inlet valve which is lifted. The ball valve is held against its seat by its retaining spring.

During this suction phase, the volume of the chamber (b) decreases and the fluid contained in this chamber is expelled towards the service port B.

At the end of the 'retraction' stroke, the piston abuts the pump body. The inlet valve is applied against its seat by the action of the retaining spring.

4.16. Variable Restrictor.

4.16.1. Introduction.

This type of restrictor allows the fluid flow in both directions but at different flow rates. The fluid is restricted, in one direction, through a calibrated orifice inside the unit whereas the flow in the opposite direction is free.

4.16.2. Description.

The restrictor consists of a valve body containing two drilling ports, of which one can be restricted, and a spring loaded valve. The valve is kept onto its seat by a pre-set spring.

4.16.3. Operation. (FIG 36).

Restricted Flow:

The valve is kept against its seat by the combination of hydraulic and spring pressure which only allows flow through the calibrated orifice-restricting flow - the second port being blanked off.

Unrestricted Flow: NORMAL OPERATION

NO1 CIRCUIT ONLY

The hydraulic pressure admitted into the valve, at the opposite end to the restricted flow, lifts the valve which is lightly spring loaded. Fluid can now pass through the centre of the valve and around the internal drillings of the unit using both drilling ports for the passage of fluid in the system.

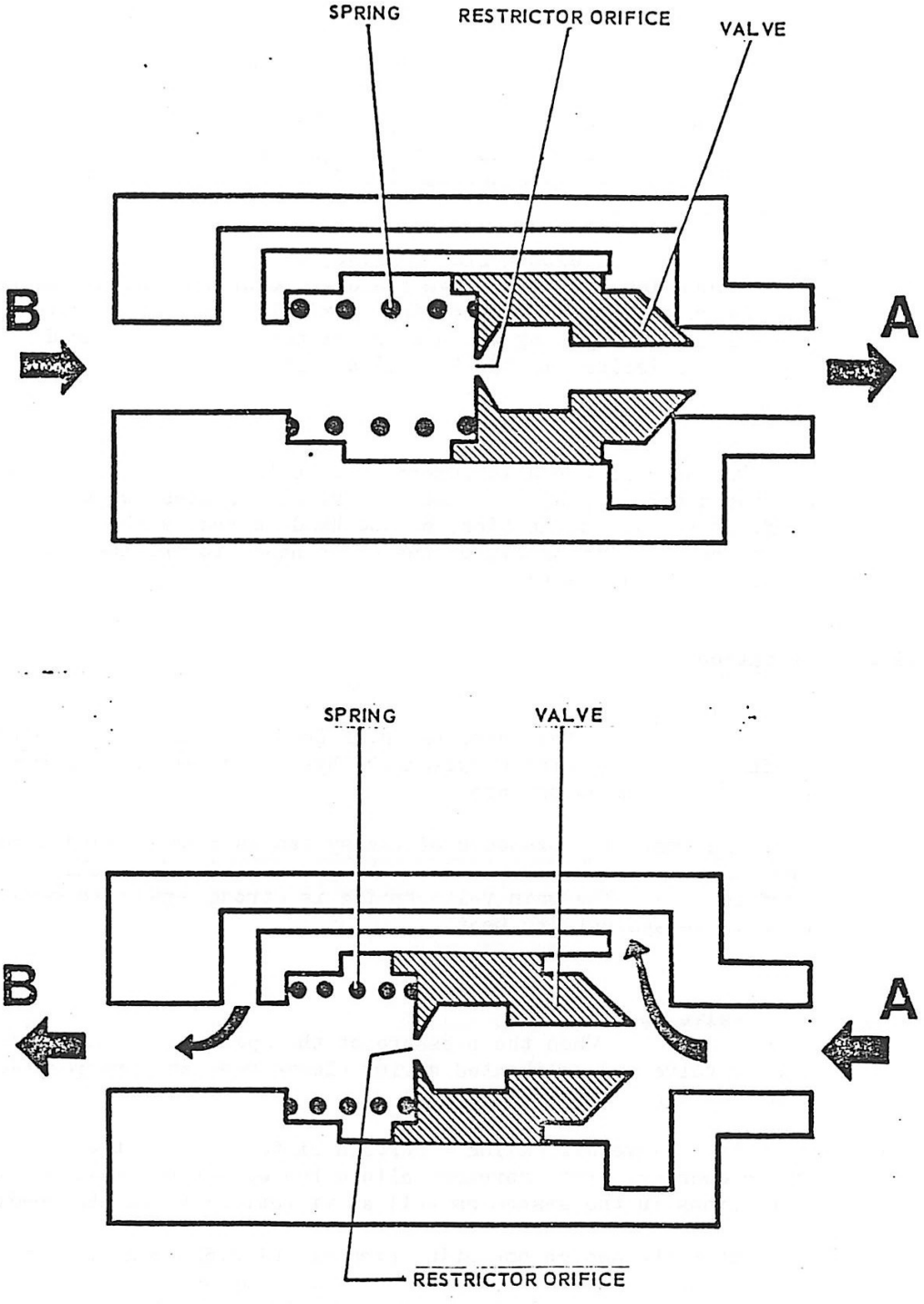

FIG. 36. VARIABLE RESTRICTOR SCHEMATIC

4.17. Pressure Relief Valve.

N°1 & N°2

4.17.1. Introduction.

The pressure relief valve fitted in both No.1. and No.2. power circuits and all systems where hydraulic pressure can be trapped without an off-load facility is intended to protect a hydraulic installation by automatically discharging the fluid towards the reservoir, when the pressure accidentally exceeds the maximum tolerated limit.

Being fitted with a slaved valve, it allows, in spite of its small dimensions, to discharge fluid at relatively high flow rates. Its design ensures high operating flexibility and thus protects it and the adjacent piping against the effects of vibrations due to pressure variations in the hydraulic system.

4,17.2. Description.

The body of the unit comprises a centre bore which accommodates all the basic components. Externally, it features two tapped orifices for its connection, on one hand to the hydraulic system to be protected (orifice A), on the other hand, to the installation reservoir (orifices B).

4.17.3. Operation.

Valve Closed:

The compression of the calibrated spring on the calibrated spring sleeve exceed the hydraulic pressure acting on the sleeves bottom surface.

The hydraulic pressure of the system is also applied through and under the main valve and to the piston which have the same surface area. The main valve spring is strong enough to keep the main valve against its seat.

Valve Open:

When the pressure of the system increases the master valve and calibrated spring sleeve move and progressively compress the calibrated spring.

The sleeve will slide a certain distance without the master valve opening. This movement allows the effect of small pressure variations in the system as well as vibrations to be absorbed.

* When the design operating pressure of 3,650 p.s.i. is reached the displacement of the master valve is stopped by a mechanical stop. The calibrated sleeve continues to move until its sealing seat with the master valve cracks open. This action releases the hydraulic pressure acting on the piston keeping the main valve closed. The pressures acting on the TOP and BOTTOM of the main

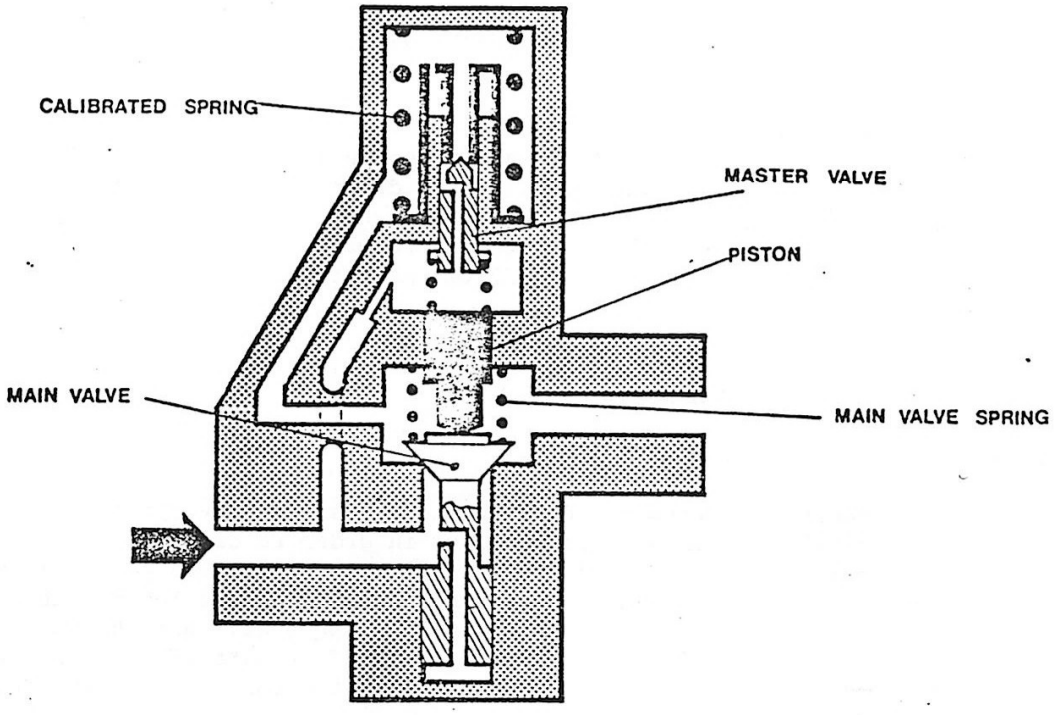

PRESSURE RELIEF VALVE

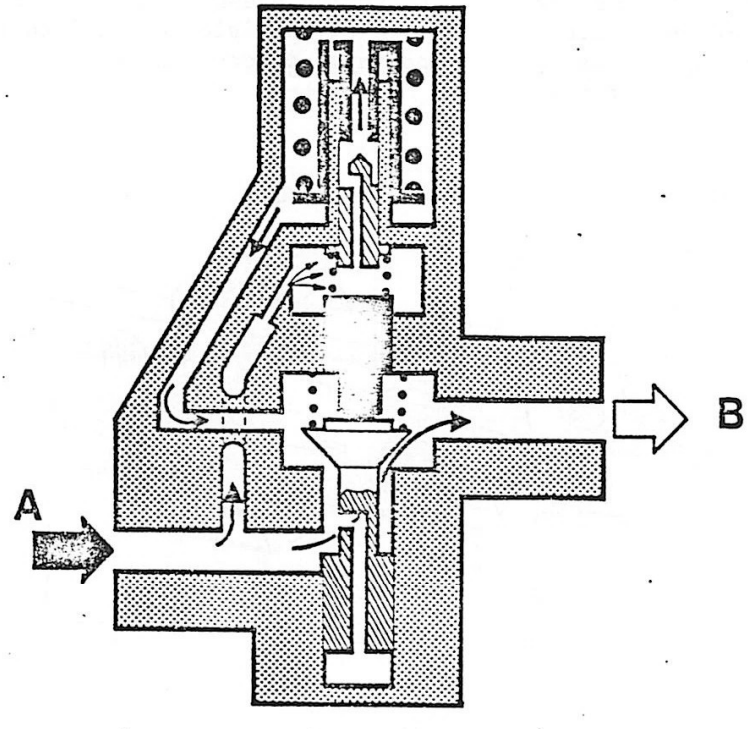

FIG.37. PRESSURE RELIEF VALVE

4.17.3. (contd).

valve are no longer balanced and the relief valve will OPEN, relieving excess hydraulic pressure back to the reservoir.

Valve Closing:

The fluid and pressure release obtained in the above paragraph will result in a decrease in hydraulic pressure in the system. When the pressure falls sufficiently for the calibrated spring to close the master valve bleed away, pressure will build up to CLOSE the main valve.

4.18. Non-Return Valves. FREE FLOW ONE WAY

4.18.1. Introduction and Description.

Non-return valves are all basically similar, varying mainly in size of thread for pipe connections in order to cater for different diameter piping. Each unit comprises a spring-loaded poppet valve housed in a body and an end fitting, external fluid leakage at the joint being prevented by a trapped 'O' ring seal. Arrowheads on alternate flats of the body indicate the direction of fluid flow. A label affixed to the end fitting bears the cure date of the seal fitted.

4.18.2. Operation.

Pressurized fluid entering the unit at connection A lifts the valve off its seat against the spring pressure and passes out through connection B. When the pressure at the inlet connection falls below the loading of the spring, the valve closes and prevents any flow in the opposite direction.

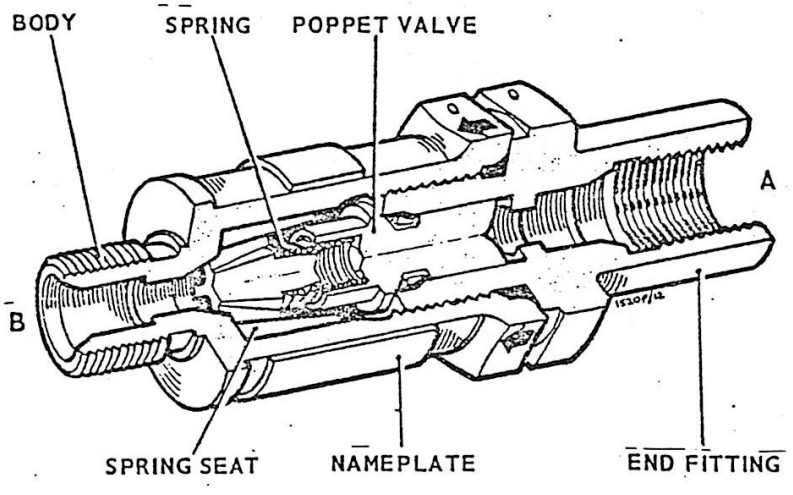

FIG. 38. NON-RETURN VALVE

4.19. Electro Hydraulic Pump. * STARBARD UNDERCARRAGE BAY

4.19.1. Introduction.

The Samm electro-pump is situated on No.2 circuit up-stream of the accumulator. It is controlled by a switch on the instrument panel giving Auto., Stop and Start selections. In the AUTO position the pump is automatically brought on-line when pressure on both hydraulic circuits falls below 1,550 p.s.i. (100 bars). The pump gives a reduced pressure of 2,000 p.s.i. (140 bars), and a rate of flow of 8.5 litres (1.87 galls). per minute.

The motor is supplied from the emergency busbar P2 and can run off the aircraft batteries for 10 minutes constant running or 20 minutes intermittently. When the pump is selected an AMBER warning light provides visual indication in the cockpit.

E.H.P. USE WITH GROUND POWER ONLY (BATTERY OVERHEAT)

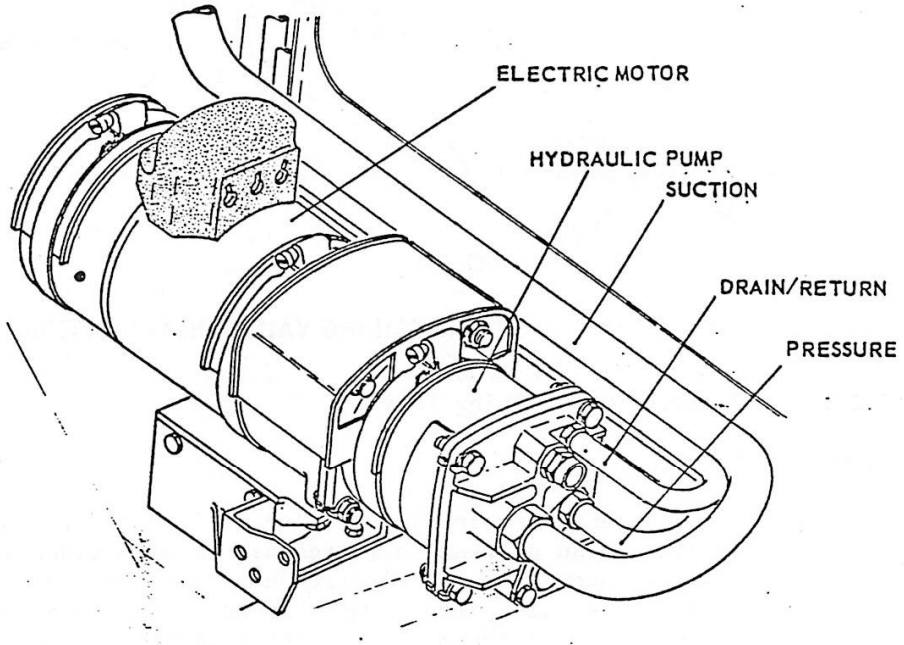

FIG. 39 ELECTRO HYDRAULIC PUMP

4.19.2. Description.

The Electro-Hydraulic Pump is a combined unit consisting of a hydraulic pump driven by an electrical 26 V. d.c. motor.

The unit is a hydraulic pressure generating type self regulating with a variable flow rate. Pressure regulation is controlled by the pressure available in the load system (i.e. motor speed).

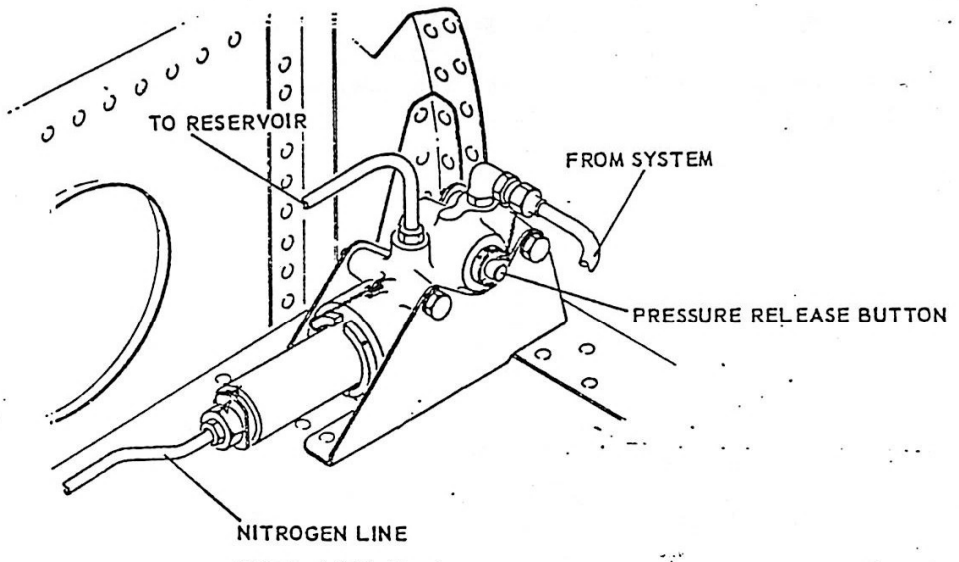

FIG. 40 PRESSURE MAINTAINING VALVE INSTALLATION.

4.20. Pressure Maintaining Valve. N°2 CIRCUIT

4.20.1. Introduction.

A pressure maintaining valve is fitted into No.2. circuit to ensure a head of reservoir pressure is maintained to provide a positive supply to the electro-pump if the normal pressure supply fails. The valve incorporates a manual pressure release button and has a small accumulator which is charged with nitrogen to a pressure of 1,500 p.s.i. (100 bars).

N2

4.20.2. Description.

The valve consists of two main parts the body and cylinder assemblies. The body of the unit incorporates the main valve and piston operating assemblies and a pressure release valve. The cylinder encloses a separator piston adequately sealed to prevent leakage of fluid into the gas side of the piston and cylinder and an adaptor and pipe connection to enable the unit to be charged with Nitrogen. The gas side of the separator piston is charged with a small quantity of operating fluid for lubrication purposes.

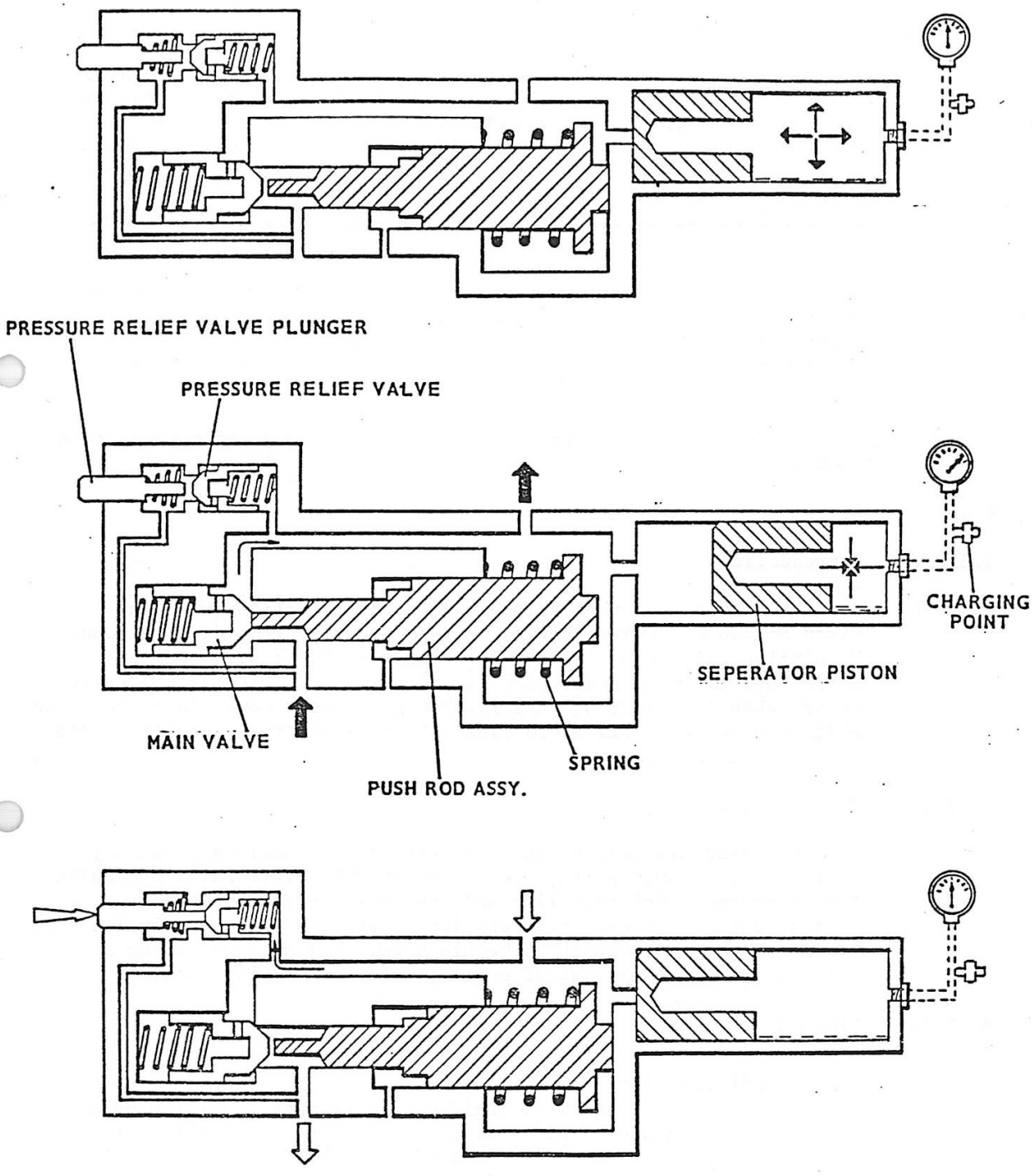

FIG. 41 PRESSURE MAINTAINING VALVE.

4.20.3. Operation.

A hydraulic pressure is felt at Port A (FIG 41) the pressure acting on the pilot valve piston will overcome its spring pressure keeping it sealed.

Fluid at a pressure will now flow through the valve to the outlet connection and hence to pressure the hydraulic reservoir, pressure will also be felt on the separator piston to compress the Nitrogen contained within the cylinder chamber. At the same time pressure will act on the top of the piston attached to the push rod assembly. Movement of the push rod compresses its retaining spring and contacts the pilot valve, further pushing it and keeping it held in the OPEN position.

As hydraulic pressure decreases within the system to a degree where the piston retaining spring pressure is greater than hydraulic pressure. The push rod will move in the opposite direction and back pressure will cause the pilot valve to close isolating the circuit.

HYD PRESS

* The pressure maintaining valve is set to close at a pressure of 1740 ± 145 p.s.i.

4.21. Restrictor By Pass Valve.

4.21.1. Introduction. N°2 CIRCUIT.

The purpose of this valve is directly associated with the fixed or two way restrictor valve, and the electro hydraulic pump. This valve allows the two way restrictor valve to be by-passed during normal No.2. power circuit operation. Closing of the valve occurs when the Electro Hydraulic Emergency Pump comes into operation which ensures that all fluid flow will pass via the restrictor into the services system.

4.21.2. Description.

The hydraulically operated control valve consists of a body incorporating three ports, two ports connected into No.2. Hydraulic System pressure delivery line and the third in the emergency hydraulic pump pressure delivery line. Internally a lightly loaded spring seats a non-return valve block whilst a heavier spring keeps a piston rod assembly out of contact with the N.R.V. block.

4.21.3. Operation.

NORMAL Function:

Flow of fluid will pass into the valve unseat the N.R.V. block and permit a free flow of fluid from Port A to Port B compressing the lightly loaded spring and allowing the N.R.V. block to contact the piston rod assembly which will act as a stop.

CLOSED Function:

The valve will become closed whenever sufficient hydraulic pressure is directed to the top of the piston rod assembly. A tapping is fed from the emergency hydraulic pump delivery pipe to the piston rod assembly, this pressure when the pump is operated moves the piston compressing its retaining spring and physically abutts the N.R.V. block, keeping the valve in a closed position preventing any flow of fluid from port A to Port B.

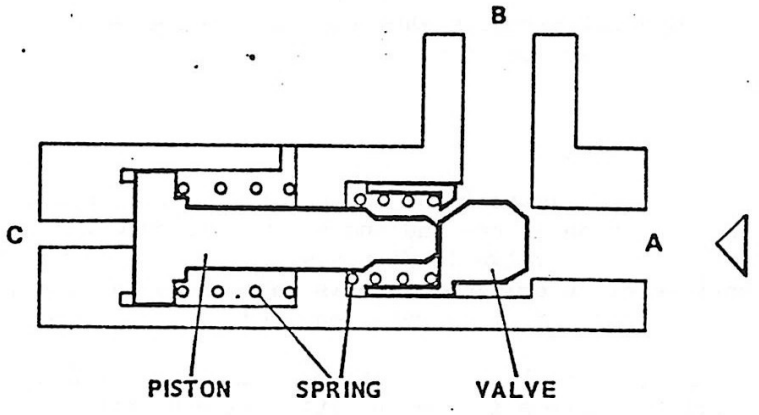

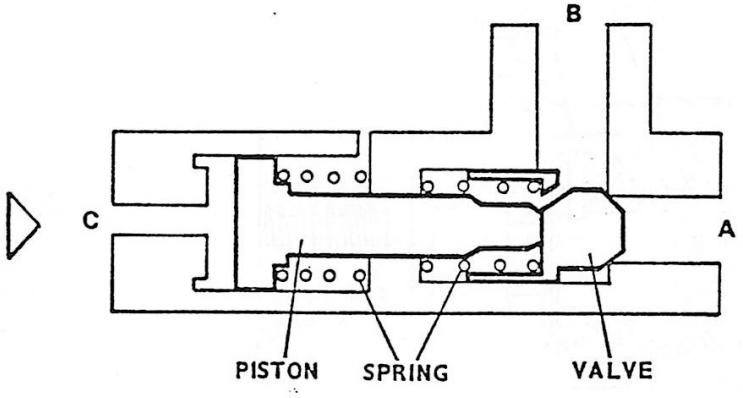

FIG. 42. RESTRICTOR BY-PASS VALVE SCHEMATIC

4.22. Fixed Orifice Restrictor.

4.22.1. Introduction.

This type of restrictor is designed to restrict fluid flow in both direction equally, by means of a fixed small orifice plate.

The purpose of this type of valve is to slow system operation down and to prevent severe pressure fluctuations occurring in the Flying Control circuits when the electro hydraulic pump is operating and a major service is operated. (e.g undercarriage lowering).

4.22.2. Description.

This restrictor is of the straight coupling type which has a male connection at one end and a female connection at its other. The body of the valve is fitted with the restrictor assembly which comprises of an orifice which is calibrated to give a certain value applicable to that flow rate required.

Restrictors having relative small calibrated orifices have protection filters fitted to either side of the restrictor plate.

4.22.3. Operation.

The flow limitation is obtained by restriction of the pressurized fluid through the calibrated orifice of the restrictor. This orifice is the only passage allowing the fluid to flow through the unit.

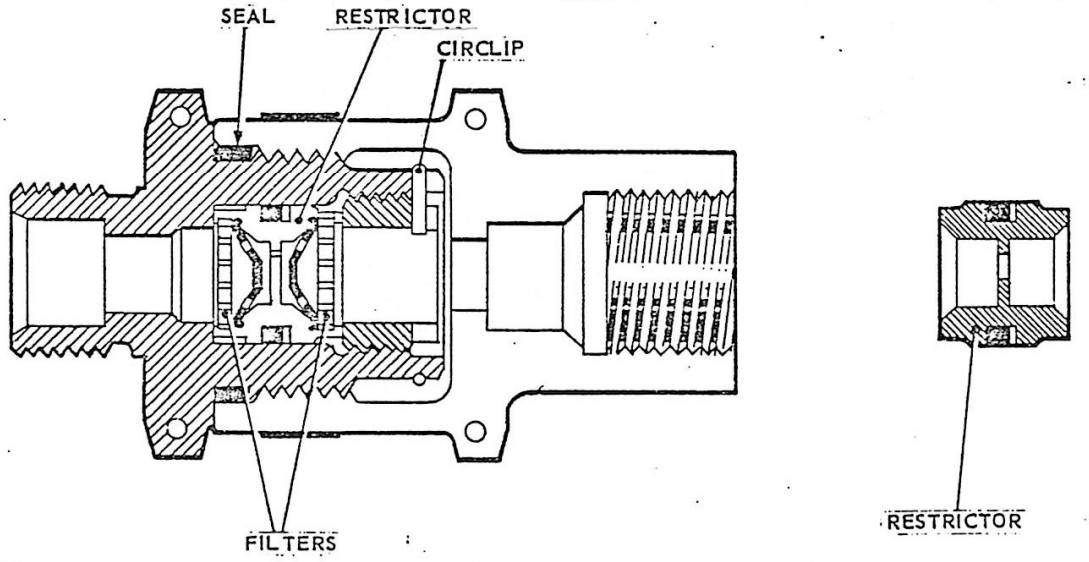

FIG. 43 FIXED ORIFICE RESTRICTOR(SECTIONAL)

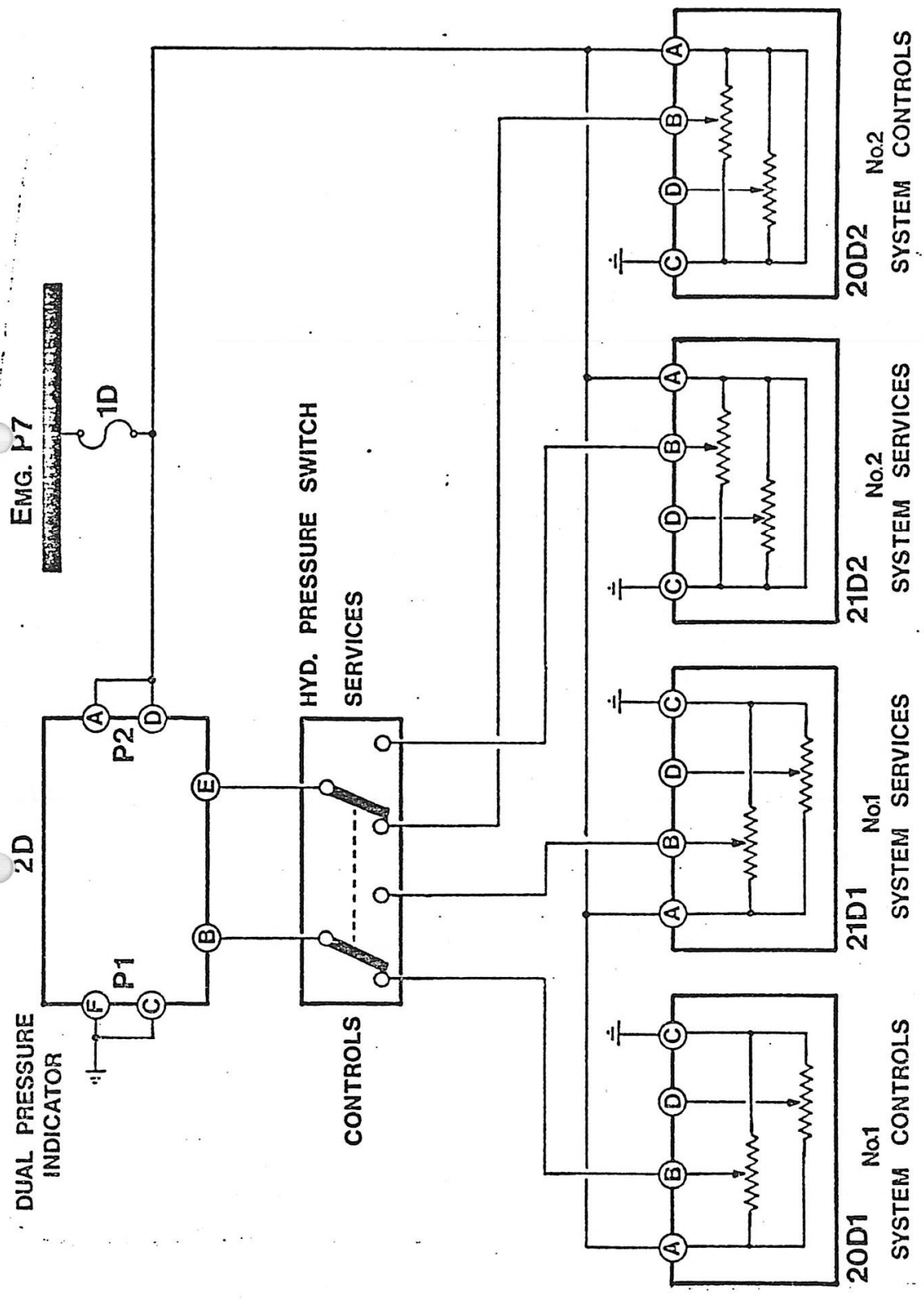

FIG. 44. HYDRAULIC PRESSURE

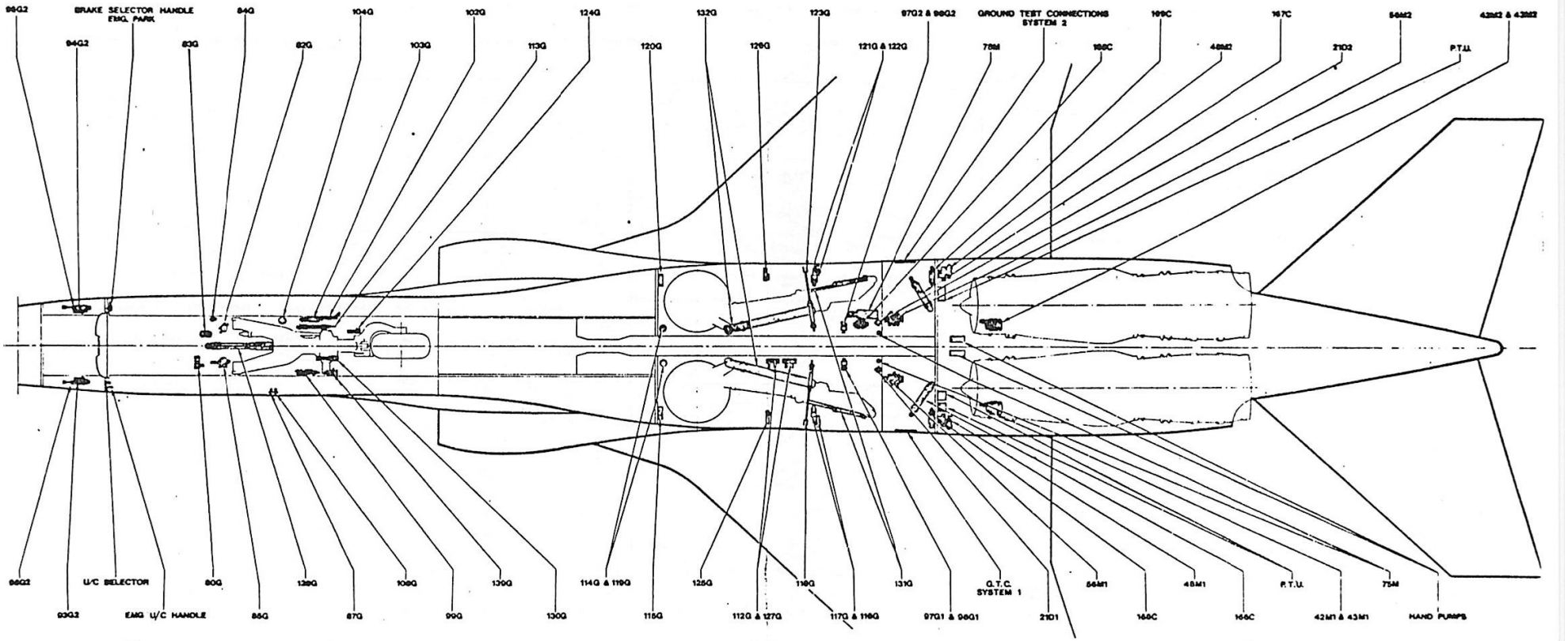

FIG.46 HYDRAULIC COMPONENT LOCATION CHART

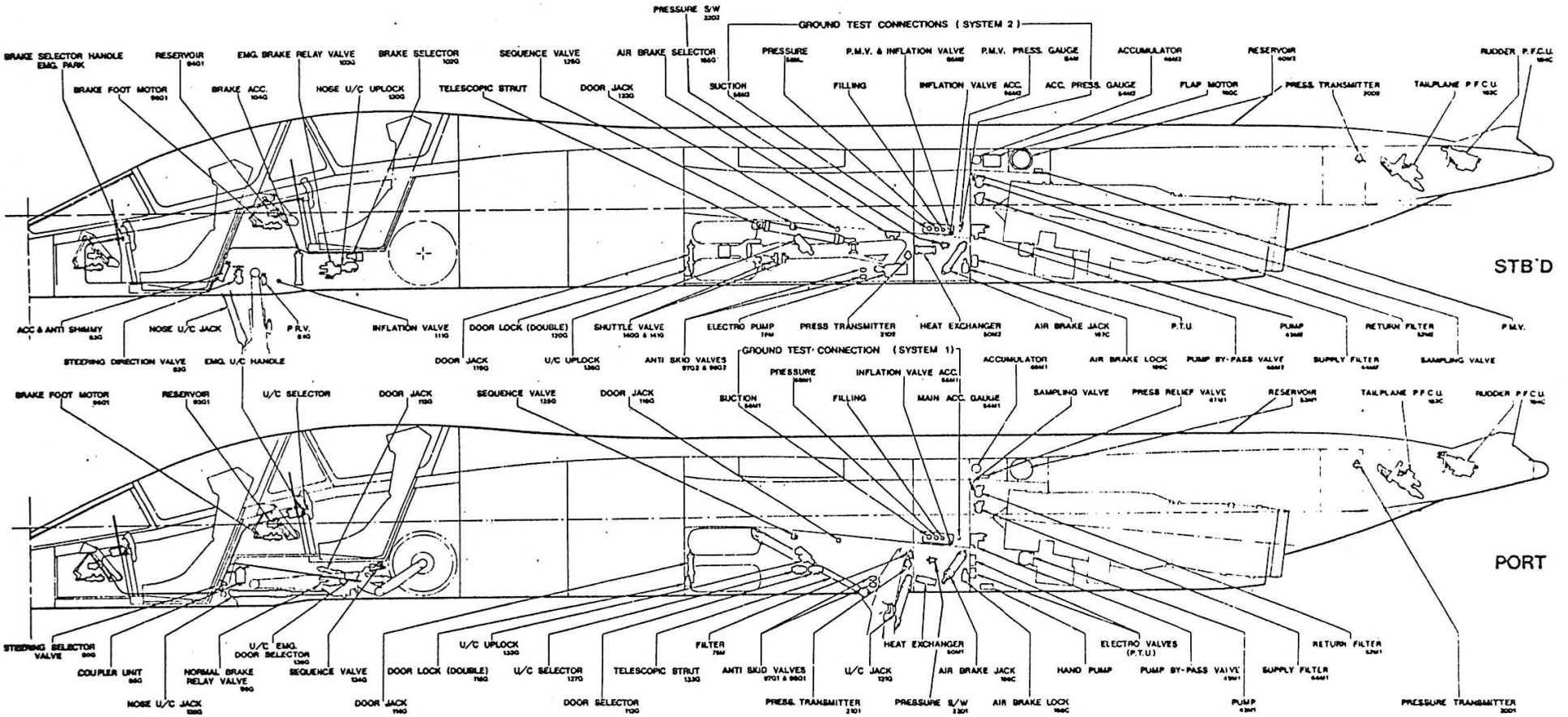

FIG.45 HYDRAULIC COMPONENT LOCATION CHART

CHAPTER. 2.

HYDRAULIC PIPE MANUFACTURE & IDENTIFICATION.

CHAPTER. 2.

CONTENTS.

1. PIPE COUPLINGS & UNIONS.
1.1. INTRODUCTION.
1.2. DESCRIPTION.
1.3. UNION IDENTIFICATION.
1.4. PIPE MATERIAL.

2. PRE-SETTING TOOLS.
2.1. TOOL COMPONENTS.

3. PIPE MANUFACTURE.
3.1. PREPARATION.
3.2. TOOL SELECTION.
3.3. ASSEMBLY PROCEDURE.

4. TESTS & LIMITATIONS.
4.1. FAULTS.
4.2. HYDRAULIC CONNECTIONS.

5. PIPE IDENTIFICATION.
5.1. DESCRIPTION.
5.2. DIRECTION OF FLOW-ARROWS.
5.3. IDENTIFICATION - PIPE POSITION.

6. QUICK-RELEASE SELF SEAL COUPLINGS.
6.1. DESCRIPTION.
6.2. DESIGN FEATURES.

7. HYDRAULIC SYSTEM PIPELINES.
7.1. SYSTEM IDENTIFICATION.

CHAPTER. 2.

ILLUSTRATIONS.

FIG.1. PIPE & BICONICAL COLLAR.
FIG.2. FEMALE PRE-SETTING TOOL.
FIG.3. MALE PRE-SETTING TOOL.
FIG.4. PIPE END ALLOWANCES.
FIG.5. STEEL REINFORCING SLEEVE.
FIG.6. TYPICAL PIPE CONNECTION.
FIG.7. PIPE IDENTIFICATION.
FIG.8. MINI-LOCK SELF-SEAL COUPLING.
FIG.9. PIPE SYSTEM COLOUR CHART.

1. PIPE COUPLINGS AND UNIONS.

1.1. Introduction.

Hydraulic pipe couplings are the Arsaero-Ermeto type widely used in French aircraft. Pipe sizes below 16 mm. ($\frac{5}{8}$inch) diameter do not require wire locking, unless locking holes are provided in the unions and adaptors.

The connection is based on the utilization of a symmetrical, biconical collar the bore of which is formed into a series of circular projections, triangular in section. These projections penetrate the outer surface of the pipe in the joint and ensures a fluid tight joint at the cylindrical surfaces.

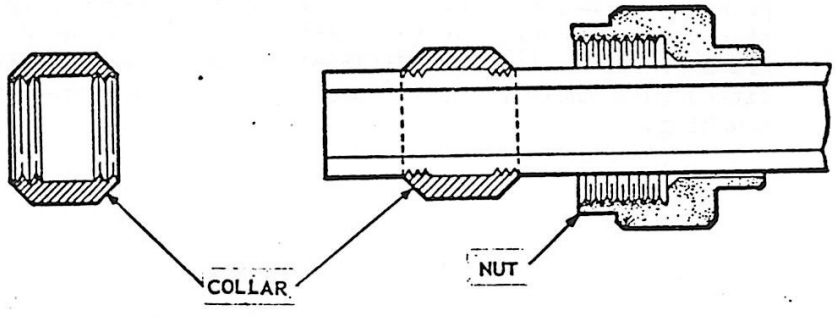

FIG.1 PIPE & BICONICAL COLLAR

1.2. Description of Operation.

The joint is obtained by the swaging action of the nut which compresses the collar and forces the projections into the surfaces of the pipe.

The conical ends of the collar engaging with the corresponding countersinks of the union body and nut, ensures the rightness of the joint.

The first operation in making the joint is the anchorage of the collars on the pipes.

The penetration of the projections on the collars requires an initial swaging action by the nuts. The torque required to remake the joint is considerably less than the initial swaging action.

When the joint is broken the collar remains fixed to the pipe and retains the nut on the pipe.

1.3. Union Identification.

The male nuts have a black finish, the female nuts have a blue finish and their sizes are related to the pipe outside diameter. Each are idented with the batch number, Maker's reference, and letter 'M'.

The collars have a yellow finish and are idented with the letters 'ARS' batch numbers, Maker's reference mark and letter 'M'. Collar sizes are also related to pipe outside diameters and collar bore.

1.4. Pipe Material.

Two types of material is in use for hydraulic pipe lines. High pressure pipes manufactured from stainless steel and Low pressure or Return pipes manufactured from light alloy. Coupling attachments are similar but initial torque loading during build are different, with an additional component reinforcing sleeve fitted into the bore of light alloy pipes to prevent the soft pipe crushing.

2. PRE-SETTING TOOLS.

2.1. Tool Components.

In all cases the collars are fixed to the pipes by means of a pre-setting tool supplied by ERMETO, which have three different diameter size mandrels for each different size pipe.

Pre-setting tools for Female nuts. (See Figure 2).

Pre-setting tools for Male nuts (See Figure 3).

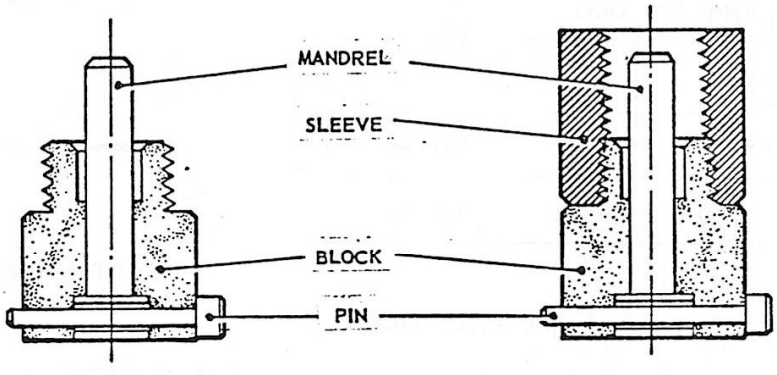

FIG.2 FEMALE PRE-SETTING TOOL FIG.3 MALE PRE-SETTING TOOL

2.1.1. Tool for Female Nuts.

For each pipe to be fitted with couplings a suitable mandrel must be chosen for the pipe bore. The mandrel size immediately less than the 'NO-GO' size is acceptable for use during assembly of the collars to the pipes. The selected mandrel must be free to rotate in the tubing.

2.1.2. Tool for Male Nuts.

The block is fitted with an appropriate sleeve for the male nut and the appropriate mandrel for the pipe.

3. PIPE MANUFACTURE.

3.1. Preparation.

3.1.1. Pipe Ends. (Steel and Light Alloy).

The pipe ends must be cut square with all burrs removed, and polished internally and externally using fine abrasive paper.

PIPE O/D (mm)		"A" (Max).
From	To	
4.0	25.0	0.5 mm
32.0	63.0	1.0 mm

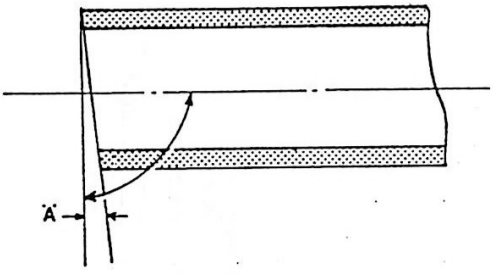

FIG.4 PIPE END ALLOWANCES

3.1.2. Pipe Ends (Light Alloy Only)

When Light Alloy pipes are used it is necessary to chamfer the internal diameter of the pipe end to enable the steel reinforcing liner to seal flush (Figure 5).

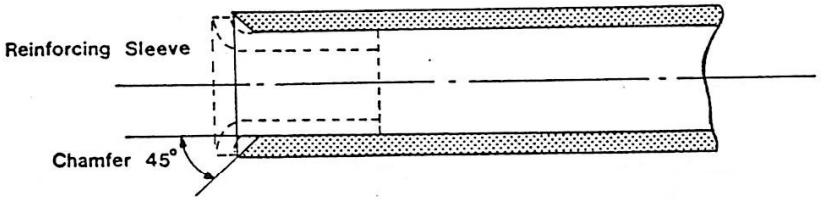

FIG.5 STEEL REINFORCING SLEEVE

3.2. Tool Selection.

Selection of the correct size mandrel for the particular size pipe is critical and must be free to rotate within the bore of the pipe, otherwise jamming of the mandrel in the pipe will cause excessive damage and possibility of pipe fracture.

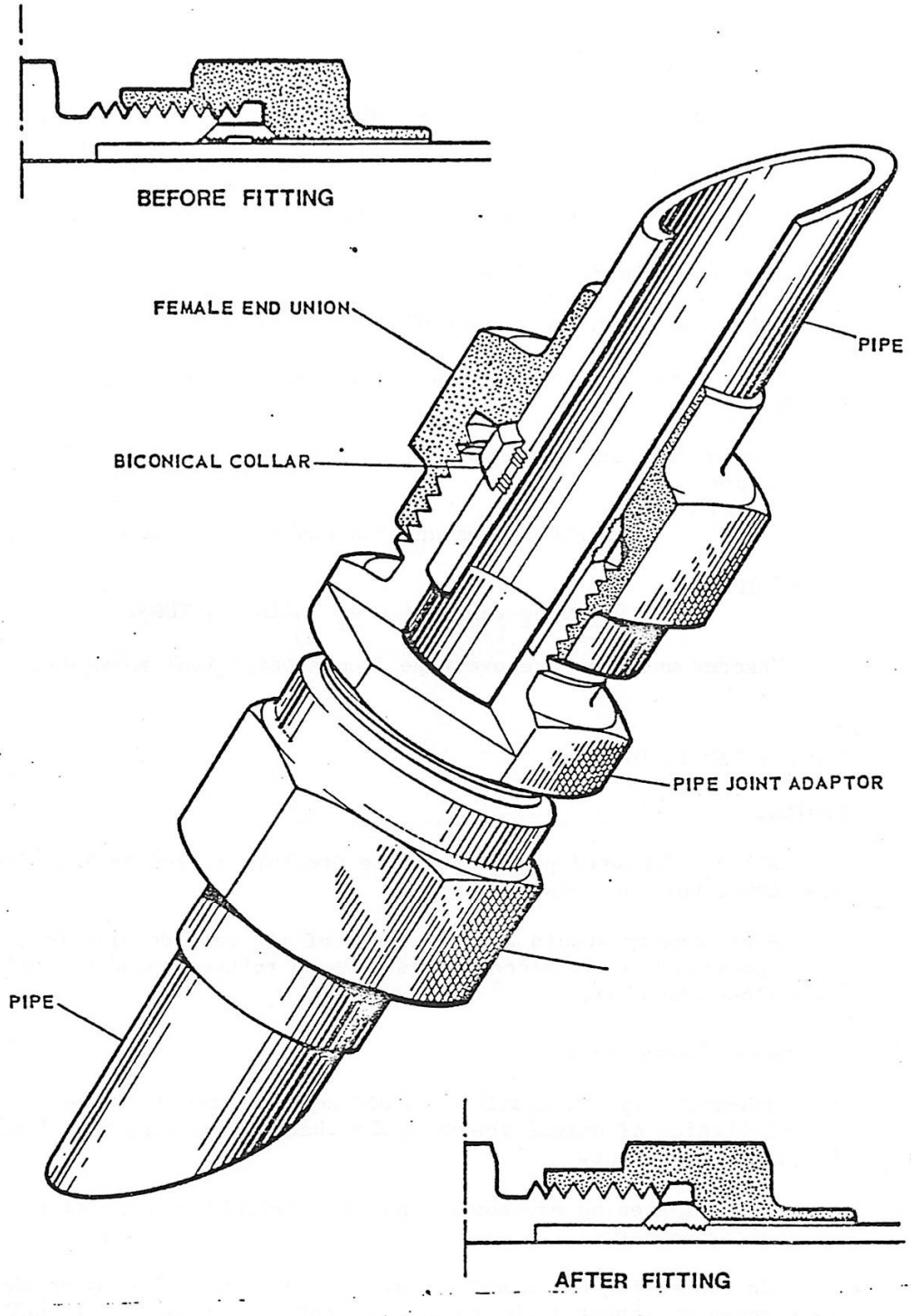

FIG.6 TYPICAL PIPE CONNECTION

3.3. Assembly Procedure.

Prepare Pipe.

Degrease and clean pipe internally and externally.

Fit steel reinforcing sleeve (LIGHT ALLOY PIPES ONLY)

Select pipe size special tool with correct mandrel.

Select correct end union (Male/Female) and biconical collar.

Secure Ermeto Special tool firmly in a vice.

Slide end union and biconical collar over the pipe end.

Insert pipe over mandrel and push firmly to the base of tool block.

Screw end union with a spanner until pipe just becomes nipped.

LIGHT ALLOY PIPES:

Further turn union 3 FLATS - $\frac{1}{2}$ TURN.

STEEL PIPES.

Further turn union $4\frac{1}{2}$ FLATS - $\frac{3}{4}$ TURN.

Unscrew union and remove pipe from special tool assembly.

4. TESTS & LIMITATION.

4.1. Faults.

All manufactured pipes should be pressure tested to 1.5 times its normal working pressure.

Pipe ovality should not exceed 8% of its outside diameter, and it is permissible for biconical collars to rotate around but not move along the pipe.

4.2. Hydraulic Connections.

Aircraft pipe connections should never be overtightened, overtightening of unions casuse leaks that are usually rectified by pipe replacement.

Pipe tightening procedures must be strictly adhered to in the following form:-

On connecting pipes and unions together the joint union should be screwed up finger tight to its adaptor then a further 1 FLAT or 1/6. TURN with a spanner and 30 for subsequent assemblies.

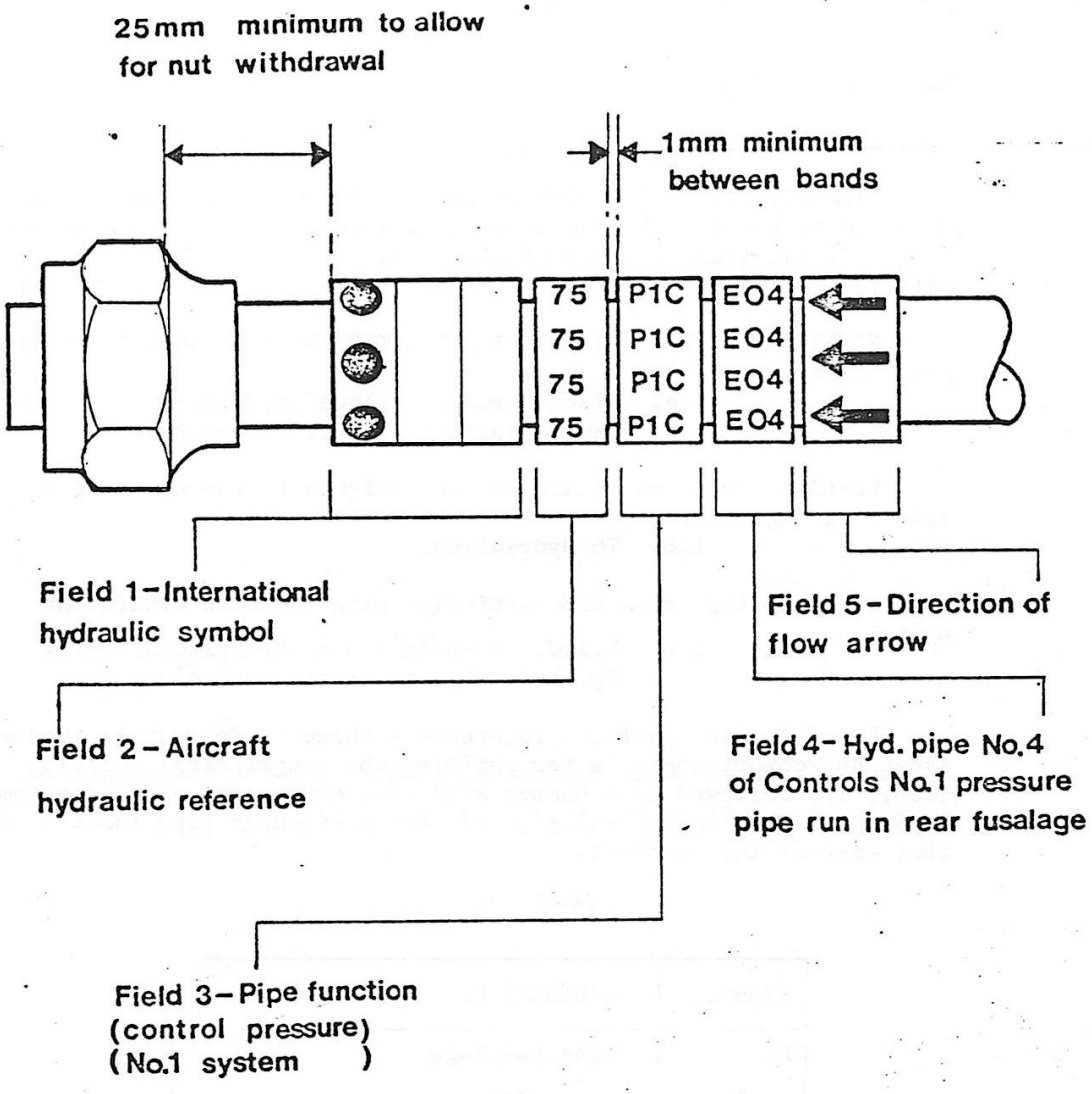

FIG.7 PIPE IDENTIFICATION

4.2. (contd)

If the pipe connection leaks then the union must be "SLACKENED", the pipe repositioned and the same procedure as previously explained carried out to re-establish the contact, and then tightened a further 30° with a spanner. If the connection still leaks it will necessitate investigation with a pipe change.

5. PIPE IDENTIFICATION.

5.1. Description.

Identification of a given pipe is made by inscriptions on bands attached to the actual pipe line and are set at a uniform distance in most cases from each end of all pipelines. Pipe chart drawings call for identifications in terms of fields from No's 1 to 5 inclusive.

Field 1 is the distinguishing N.A.T.O. symbol and colour for a particular system,

i.e. Black Circles followed by a Yellow and Blue Band signifies HYDRAULIC SYSTEM.

Field 2 is a two figure number assigned to the system for manufacturing reference,

i.e. 75 Hydraulics.

Field 3 indicates the particular pipe function within the system,

i.e. P.I.C. meaning a pressure pipe of No.1. Hydraulic System to the controls.

Field 4 Pipe position reference - three to four digit identfication, comprising a letter defining the geographical location (Table 1), followed by a number allocated on the appropriate assembly drawing to that individual pipe of that particular pipe function in that part of the aircraft.

TABLE 1.

SYMBOL	AIRCRAFT LOCATION.
N	Nose Fuselage
F	Centre Fuselage
E	Rear Fuselage and Tail
W	Wing

Field 5 is for miscellaneous markings

i.e. Flow Arrows.

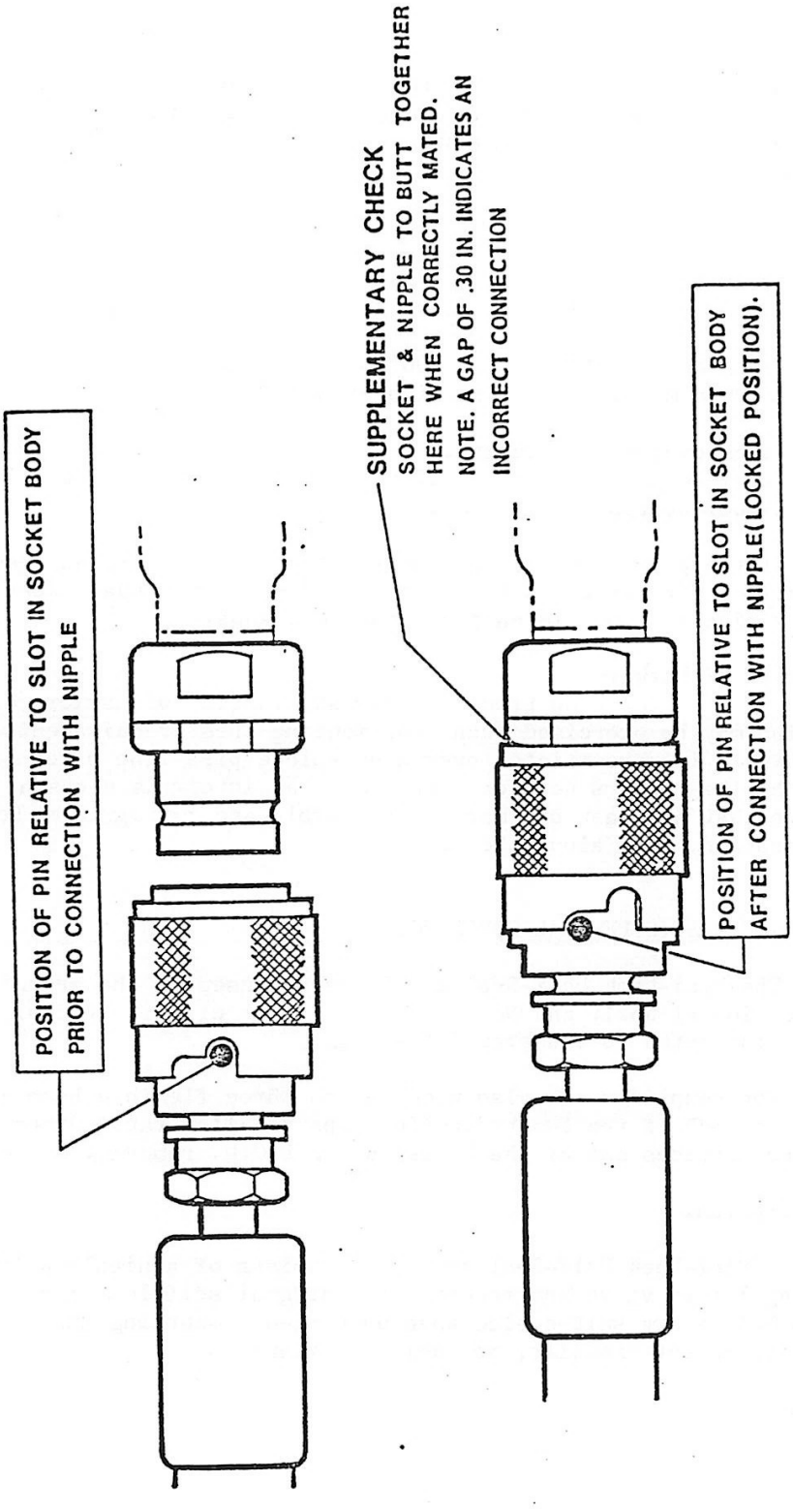

MINI-LOCK SELF-SEAL COUPLING

FIG.8

5.2. Direction of Flow-Arrows.

The use of flow-arrows is restricted to places where a knowledge of flow direction would be helpful, e.g. non-return valves, flow restrictors, etc., (the flow-arrow indicates the direction of the main flow).

5.3. Identification Pipe Position.

Pipes less than 150 mm length.
Carry field 2, 3 and 4 markings only at mid-length.

Pipes between 150 mm and 600 mm in length.
Carry complete identification at mid-length.

Pipes over 600 mm length.
Carry complete identification at each end with international symbol nearest to the end.

If the pipe is very long and /or the ends are hidden when installed, further bands shall be fitted so that visual identification of any pipe in a bay is easy and non-ambiguous.

5.4. Location of Markers.

To preclude over-application of marker, discretion may be exercised when implementing these requirements. Where visibility is unrestricted over a one-piece pipe-line of considerable length, the markers need only be placed at intervals necessary to ensure that at least one marker is visible and recognisable from any observation point along the line.

6. QUICK-RELEASE SELF-SEAL COUPLINGS.

The Mini-Lock Self-Seal couplings are used on the ground test connection of No.1. and No.2 hydraulic power circuit, the nipple ends being connected to the ground test rig.

The couplings are also used on the three flexible hose connections on each of the two hydraulic pumps to allow rapid disconnection of the services and of the hoses during E.C.U. removal.

6.1. Description.

A Mini-Lock Self-Seal coupling consists of a nipple with a spring-loaded valve and socket with integral self-lock mechanism; both halves are self-sealed when uncoupled. Coupling and uncoupling is carried out manually, no tools are required.

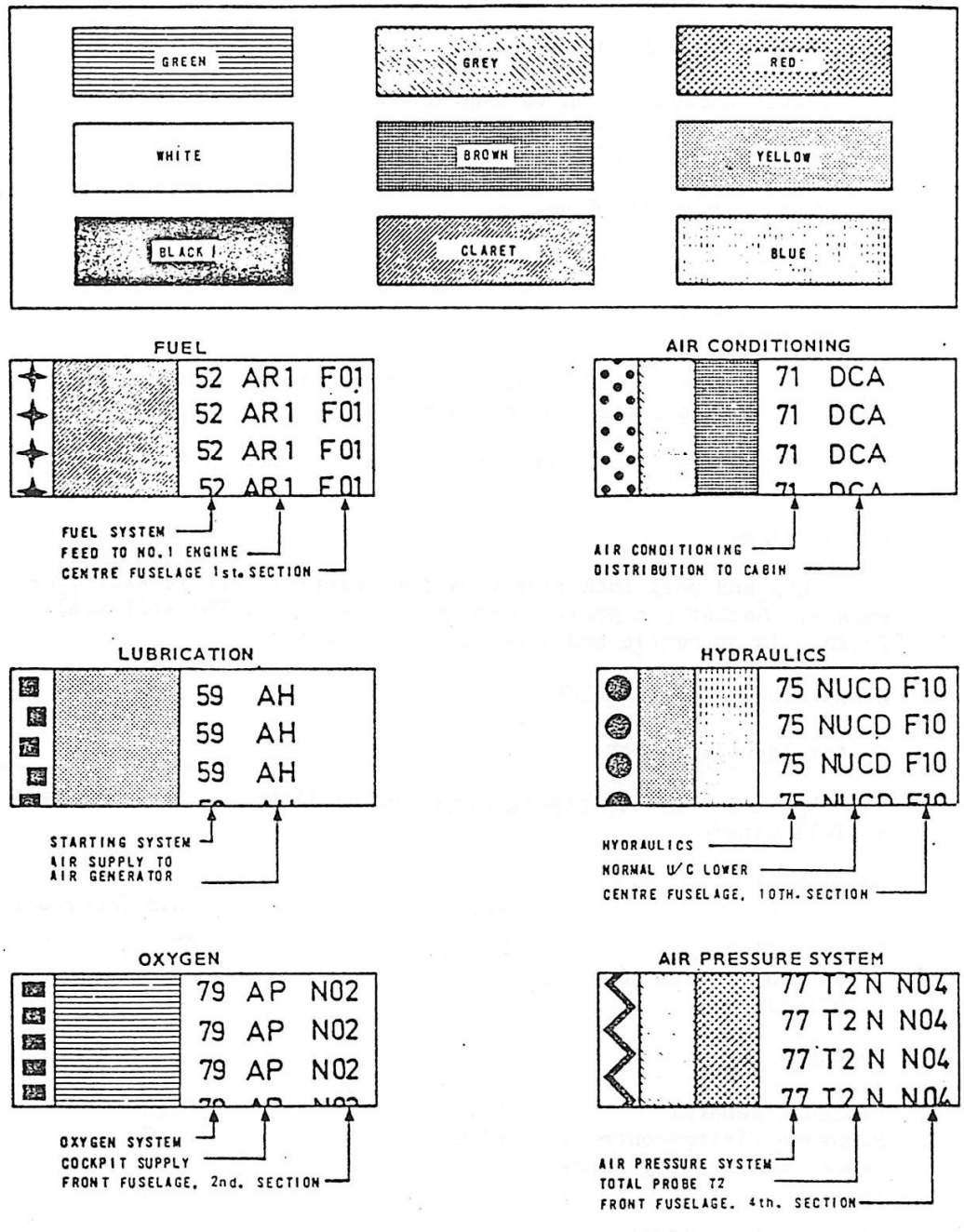

FIG.9 PIPE SYSTEM IDENTIFICATION

6.2. Design Features.

The design features are as follows:-

No air inclusion on connection.

Zero fluid loss on disconnection.

Instantaneous action to lock and unlock.

Integral Self-Lock.

Minimal pressure drop.

Minimum outside diameter compatible with Maximum bore.

6.2.1. To Couple.

Push socket hard over nipple. Lock ring will rotate automatically with pin located as shown on Page

Check security of coupling by straight axial pull.

6.2.2. To Uncouple.

Turn and pull lock ring away from nipple. Nipple will disengage. Socket pin position as on Page 12 . The self-seal feature is automatic and immediately effective.

7. HYDRAULIC SYSTEM PIPELINE.

7.1. System Identification.

Hydraulic system pipes, large and small bore are identified as following:-

Suction.	No.1 (port).	No.2 (starboard).
Pump-suction.	SP.p1	SP.p2
Electro-hydraulic pump (suction)		SE.p2
Pressure.		
Pressure general	P1.G	P2.G
Pressure flying controls	P1.C	P2.C
Pressure-ancillary services.	P1.SV	P2.SV
Pressure-undercarriage services	P1.u/c	
Electro-hydraulic pump (pressure)		PE.p2
Hand-pump (pressure).	P1.pm	P2.pm

7.1. (contd)	No.1 (port)	No.2.(starboard)
Hydraulic Power Transfer Unit.		
Motor supply pressure	P1.MP	
Pump discharge pressure		P2.MP
Pump suction	SP1.MP	SP2.MP
Motor return	SR1.MP	SR2.MP
Return.		
Return general.	R1.G.	R2.G.
Return flying controls.	R1.C.	R2.C.
Return ancillary services.	R1.SV.	R2.SV.
Return pump self-regulating.	RP.p1	RP.p2
Return electro-hydraulic pump self-regulating.		RE.p2
Nose Wheel Steering.		
Supply - steering.		A.D.I
Supply - steering port.		A.D.I.G
Supply - steering starboard		A.D.I.D
Pressure - anti-shimmy		P.A.S
Main Wheel Braking.		
Supply - normal braking	P1 FN	
Normal braking port (Starboard) inboard wheel	F1 GI FIDI	
Normal braking port (starboard) outboard wheel.	F1 GE-FIDE	
Emergency braking port (starboard)		F2G-F2D
Pressure-parking brake		P2-FP

7.1 (contd)

	No.1.(port)	No.2.(starboard).
Undercarriage and Doors.		
Undercarriage lower - normal	NU/CD	
Undercarriage retract- normal	NU/CR	
Undercarriage doors open normal	NPO	
Undercarriage doors close normal	NPF	
Undercarriage lower - emergency		EU/CD
Undercarriage doors open - emergency		E.P.O.
Flaps & Slats.		
Supply - flaps	AC1	AC2
Flaps - raise	IC.AI	2C.AI
Flaps - lower	IC.Br	2C.Br
Flaps - brake	IC.Fr	2C.Fr
Supply - slats	AB1	AB2
Slats - open	1BO	2BO
Slats - close	1BF	2BF
Slats - brake	1BFr	2BFr
Return - motor leakage	1RF	2RF
Air Brakes.		
Air brakes open - normal		NAO
Air brakes close- normal		NAF
Flight Refuelling Probe.		
Normal extension of probe	NRVS	
Normal retraction of probe	NRVR	
Emergency extension of probe.		ERVS

CHAPTER. 3.

POWER TRANSFER SYSTEM.

CONTENTS.

1. POWER TRANSFER SYSTEM.
1.1. INTRODUCTION.
1.2. DESCRIPTION.
1.3. OPERATION.

2. HYDRAULIC POWER TRANSFER UNIT.
2.1. INTRODUCTION.
2.2. DESCRIPTION.
2.3. OPERATION.

3. POWER TRANSFER CONTROL VALVE.
3.1. INTRODUCTION.
3.2. DESCRIPTION.
3.3. OPERATION.

4. TWO-WAY RESTRICTOR VALVE.
4.1. INTRODUCTION AND DESCRIPTION.

5. N.R.V.
5.1. INTRODUCTION AND DESCRIPTION.

ILLUSTRATIONS.

FIG.1. HYDRAULIC SYSTEM SCHEMATIC.
FIG.2. P.T.U. SYSTEM.
FIG.3. HYDRAULIC POWER TRANSFER SYSTEM (Electrical).
FIG.4. HYDRAULIC PUMP & ELCTRO HYDRAULIC PUMP.(Electrical)
FIG.5. P.T.U. PUMP.
FIG.6. P.T.U. CONTROL VALVES.
FIG.7. P.T.U. CONTROL VALVES.

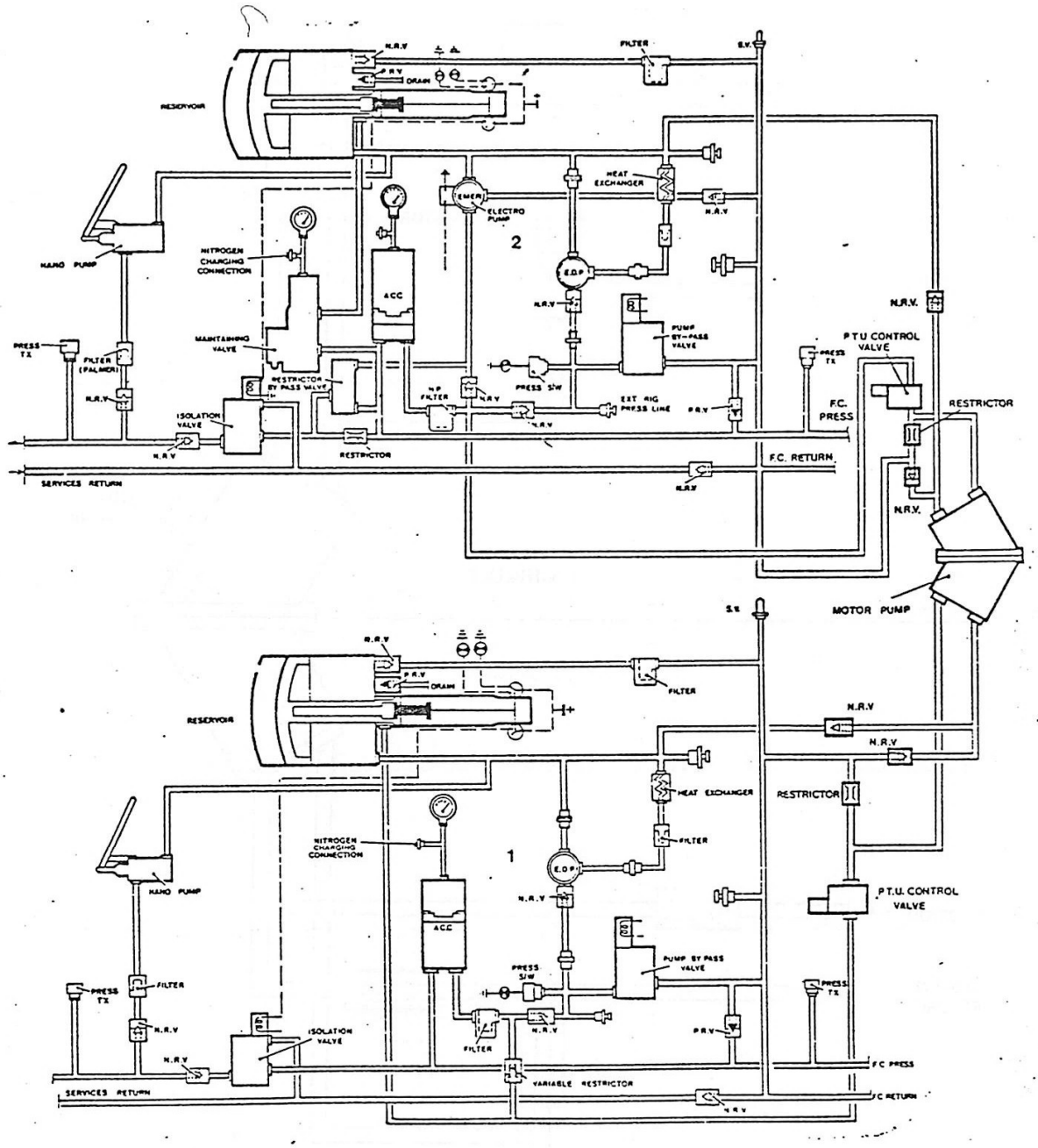

HYDRAULIC SYSTEM SCHEMATIC

FIG.1

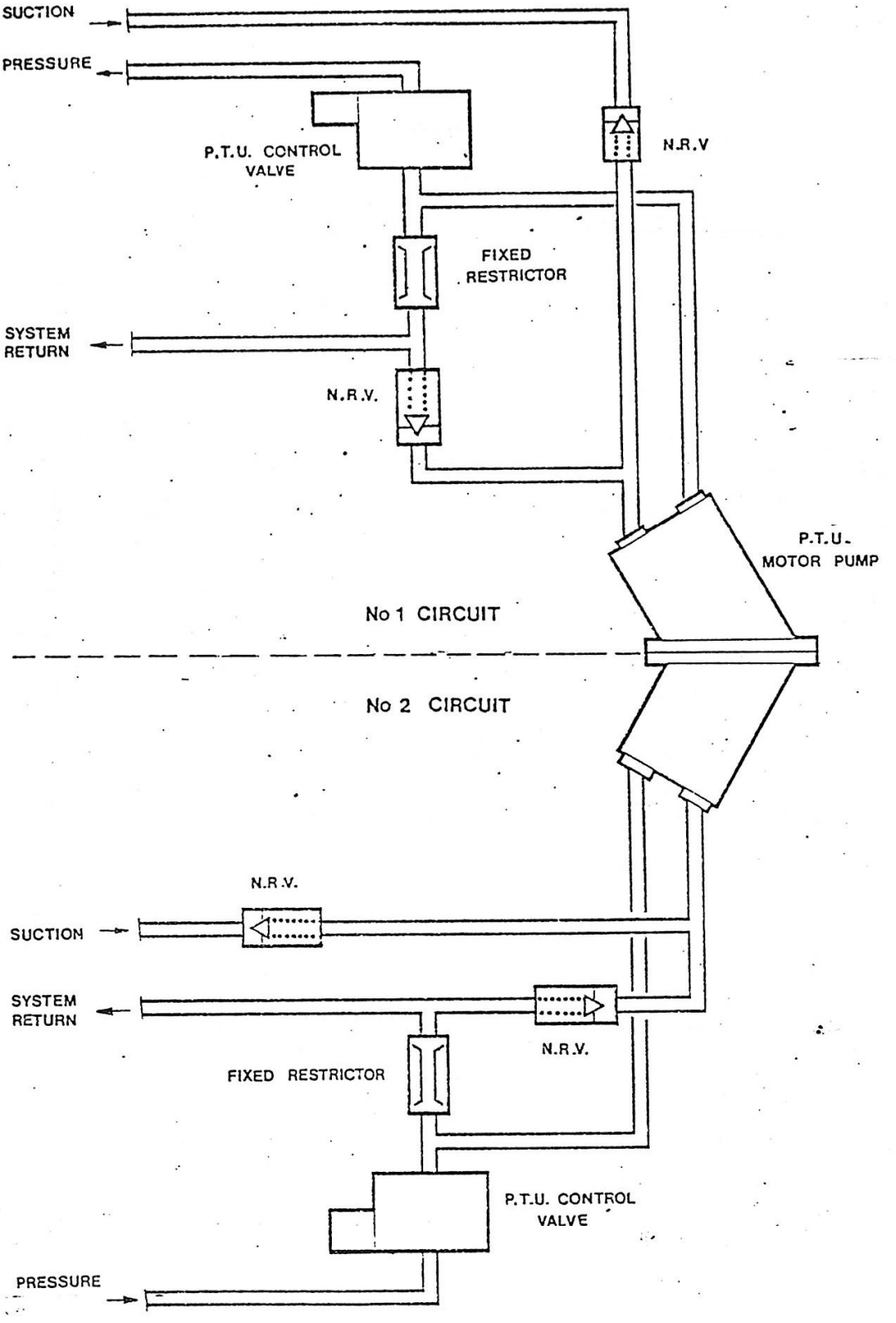

P.T.U. SYSTEM

FIG.2

1. POWER TRANSFER SYSTEM.

1.1. Introduction.

In the event of No.1. engine failure with the undercarriage down, there is insufficient power in the remaining engine to overcome the high drag of the undercarriage.

As 'U/C UP' is operated by No.1 system only, a Power Transfer Unit (P.T.U) circuit has been fitted between No.1. and No.2. system to allow No.2 system to operate No.1. system by mechanical interconnection.

The Power Transfer Unit Motor/Pump comprises of a hydraulic motor which drives an hydraulic pump. These are fitted back-to-back and comprise a compact unit, and either half will operate in reverse (i.e. the pump becoming the motor etc).

If the No.2 engine fails No.1. system will still be operative therefore 'Normal' u/c retraction facilities are still functionable but the motor/pump can be reversed with view to operating services not supplied by No.1. system (i.e. Airbrakes, Nose Steering and Anti-Shimmy).

1.2. Description.

Hydraulic control to the unit is initiated by an hydraulic selector valve which is an electrically operated non-return valve. The selector valve is controlled electrically by the engine speed tachometer, which operates when the engine speed drops below 42%, or by operating a switch in the cockpit anotated, - Pump By-Pass The components contained in the power transfer circuit are:-

Hydraulic Motor/Pump Unit.

Hydraulic Control Valves.

Fixed Restrictors.

N.R.V's.

Engine Tachometers.

Hydraulic System Pump By-Pass Switches.

Reservoir Low Level Switches.

Numerous Electrical Relays.

All the above items pay particular roles in the sequence of operation and emergency functions of the Power Transfer Circuit.

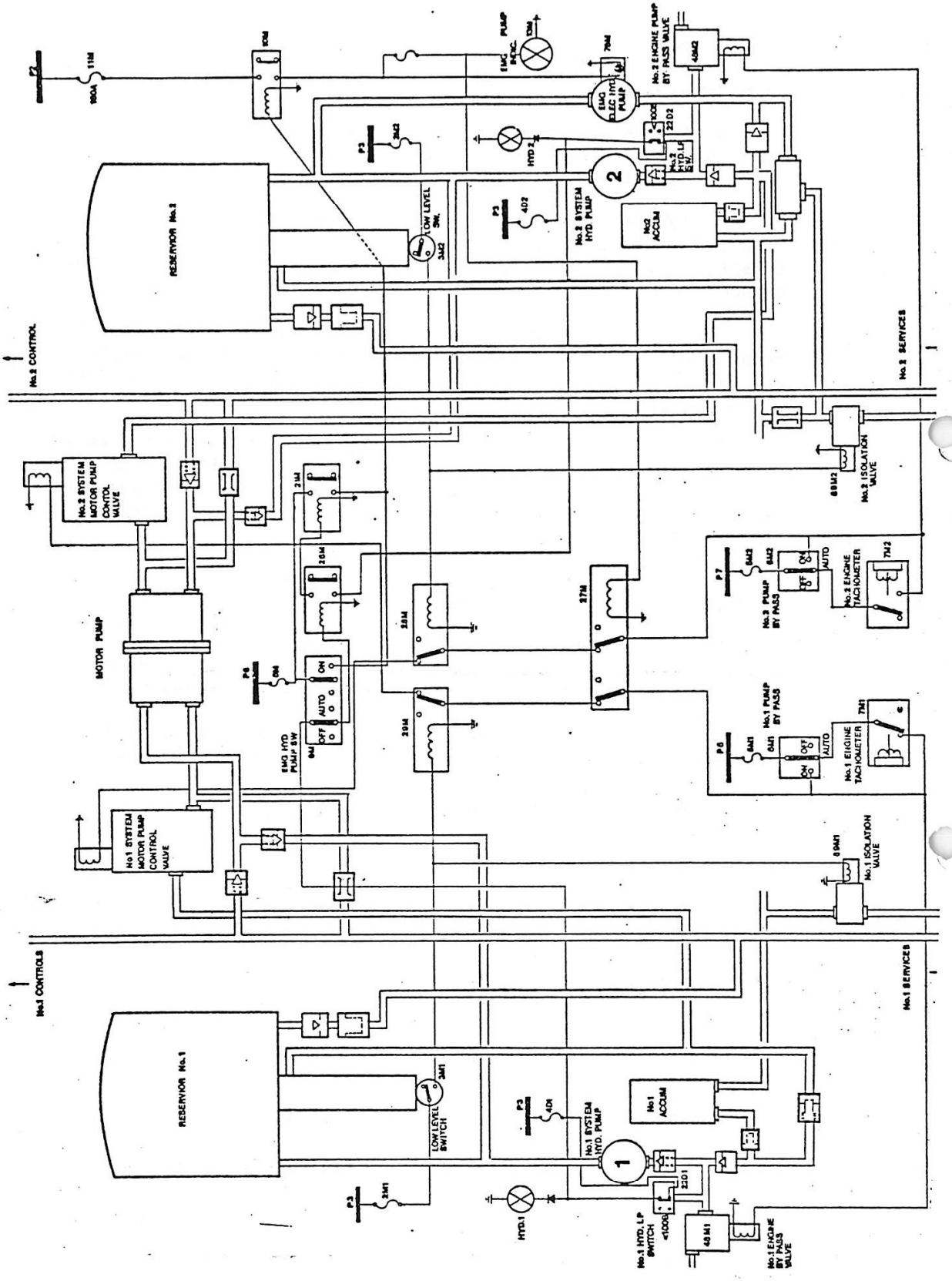

HYDRAULIC POWER TRANSFER SYSTEM (ELEC)

FIG.3

1.3. Operation.

With No.1.engine r.p.m. below 42% and the E.D.P. By-Pass switch in 'AUTO' the electrical circuit to the pump By-Pass valve and the branch line to the No.2. system Power Transfer Unit control valve will energise.

Hydraulic pressure from No.1. pump will dump back to the reservoir and the low pressure switch, situated between the E.D.P. and its accumulator, will illuminate the "HYD 1" light on the C.W.P. and switch on the attention getter flashing lights. At the same time, No.2. systems Power Transfer Unit control valve allows No.2. system pressure to the Power Transfer Unit operating its side as a Motor and driving the other half, connected to No.1 side, as a pump. Suction for the pump is taken from the pump return line, a non-return valve and a loop circuit being fitted to allow this reversal of flow. Pressure is passed into No.1. system via the de-energised control valve of No.1 system, free flow allowed in this direction.

Should the level in No.1 system reservoir drop to a dangerous level (1 litre) the services isolation valve energises cutting off the supply to the u/c therefore, the Power Transfer Unit circuit, fitted up-stream cannot function as it was intended, so a relay is fitted to de-energise the control valves to the Power Transfer Unit circuit.

In the event of the electro-pump in No.2 circuit being energised another relay is fitted to once again de-energise the motor/pump circuit, as the electro-pump, with its reduced flow and pressure cannot cope with the high resistance of the Power Transfer Unit.

As stated before No.1 system can operate No.2 system in the event of a No.2. engine failure, the Power Transfer Unit working in reverse, but its only function would be to operate either the airbrakes or nose wheel steering and anti-shimmy. The same safeguards are installed in the reverse system as in the normal mode of No.2. system driving No.1.

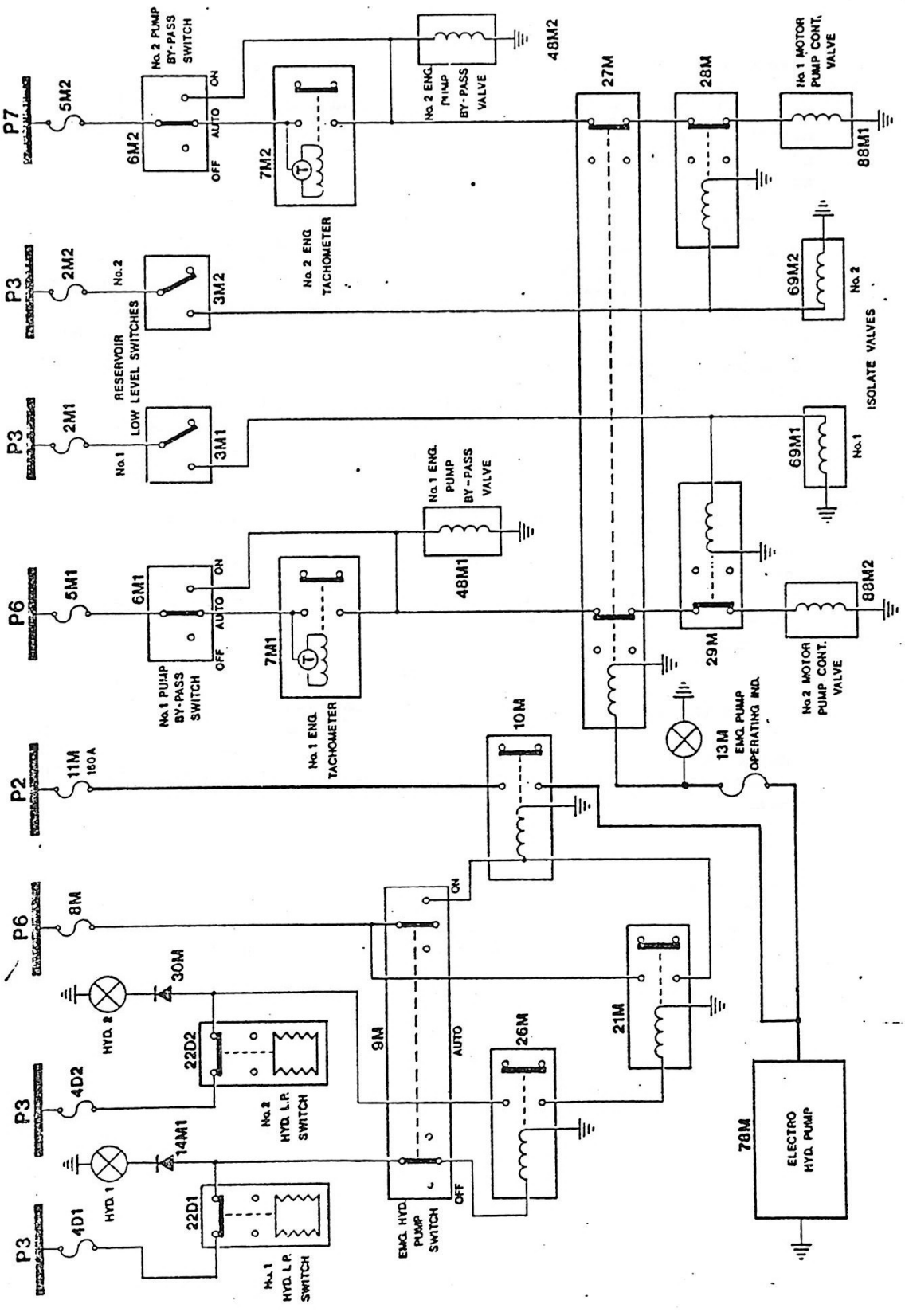

HYDRAULIC PUMP & ELECTRO HYDRAULIC PUMP (ELEC)

FIG.4

HYD. POWER TO A/C
- BY PASS S/W OFF

2. HYDRAULIC POWER TRANSFER UNIT. *

2.1. Introduction.

The Hydraulic Power Transfer Unit (P.T.U) comprises of two mechanically coupled hydraulic motors each of which can operate as a motor when supplied with pressure from the system still operating and driving the other which then operates as a pump, pressurizing the failed system. Each P.T.U. is connected to a hydraulic system by:-

A supply/delivery pipe, the flow being controlled by an electrically-operated valve which assures the supply when functioning as a motor or the delivery when operating as a pump.

A suction/return pipe, the flow being divided into two, assuring the return to the reservoir when operating as a motor, or the suction from the reservoir when operating as a pump.

2.2. Description.

* The function of the P.T.U. is to provide a continuous flow of hydraulic fluid at a pressure of 2,600 p.s.i. for the operation of the aircraft hydraulic circuits in the event of normal supply failure.

The power transfer unit consists of two hydraulic motors, one functioning as a pump, secured back-to-back. A spacer plate, sandwiched between the two motors has tapped holes to facilitate the mounting of the unit in position in the aircraft, which is situated in the Starboard Engine Bay Compartment on the rear face of Frame 30.

The two motors are coupled to each other by a splined coupling shaft. Hydraulic pressure for the drive motor is taken from the aircraft Power Circuit, thus ensuring that the two hydraulic circuits are effectively isolated from each other.

The motors are fixed stroke; nine-cylinder, piston type units which provide a constant displacement each revolution of the rotating assembly. The housing is cranked through 30 deg to give a constant angle of displacement for the shaft and pistons sub-assembly. The universal link, located between the drive shaft and cylinder block allows both to rotate as a unit.

2.3. Operation.

The driving unit rotates under hydraulic pressure supplied from the aircraft Power Circuit and rotates the driven unit by the splined coupling shaft connecting both units together. The driving unit, therefore, rotates as a motor and the driven unit as a pump. Operation of the power transfer unit is continuous by the inclusion of restrictor valves fitted in both pressure and delivery lines.

Pressure oil from the aircraft Power Circuit is directed via the inlet port to piston bores of the cylinder block. The pistons are pushed away from the valve plate and the angular displacement resulting from cranking the motor housing results in reciprocal movement being converted into a rotary motion of the rotating sub-assembly. As the end-of-stroke position is approached by the pistons, rotation of the sub-assembly will have aligned the pistons and outlet port. Hydraulic oil in each cylinder will thus be pumped out and returned to the reservoir.

Operation of the pump unit is the opposite to that of the motor. As the pump rotates (driven by the splined coupling shaft) the pistons draw in hydraulic fluid via the pump inlet port. Continued rotation of the cylinder block aligns the cylinders with the pump outlet port so that on the return stroke, hydraulic oil is pumped to the equipment being actuated at a pressure determined by the system relief valves.

Should an excess pressure condition occur within the motor/pump housing a relief valve, which is held closed by spring pressure will open and relieve directly to the low pressure port.

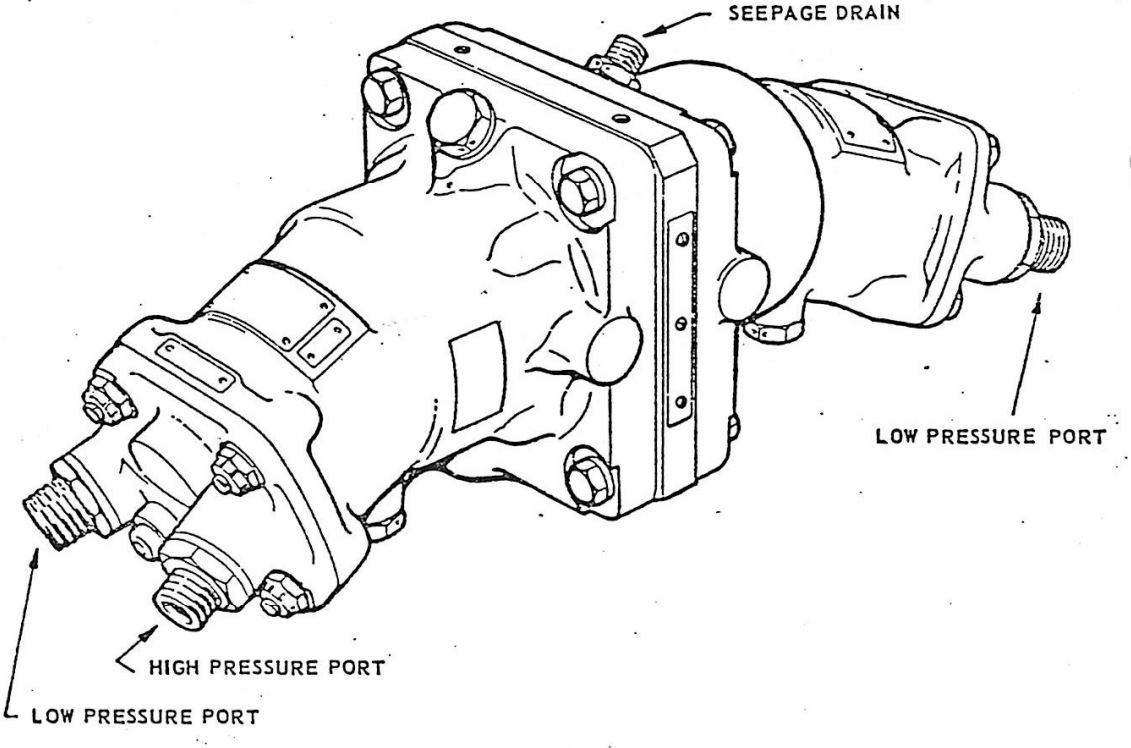

P.T.U. PUMP

FIG.5

CONTROL VALVE SHOWN IN CLOSED POSITION (N.R.V. CONFIGURATION)

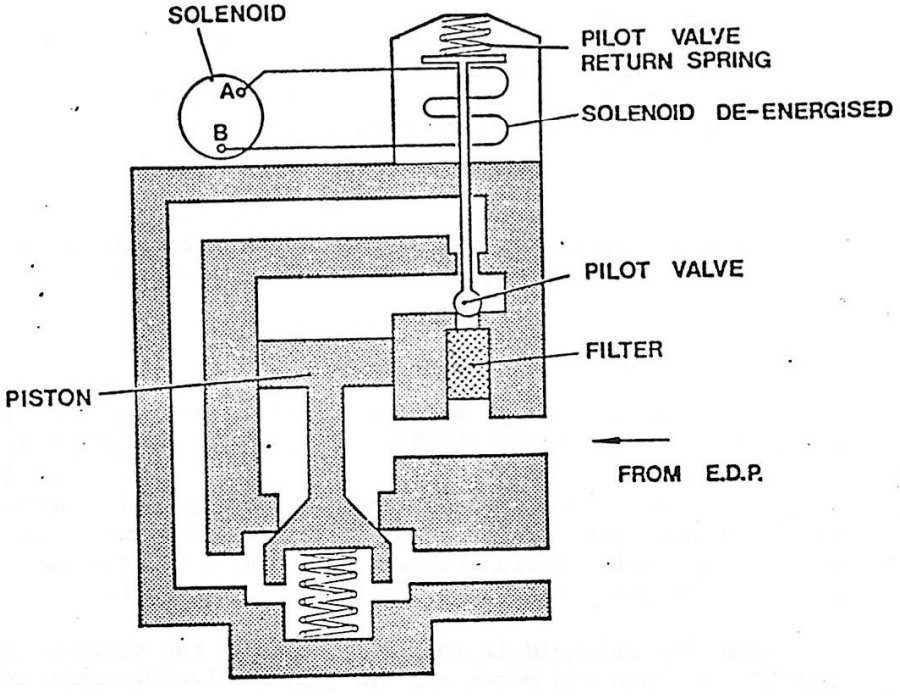

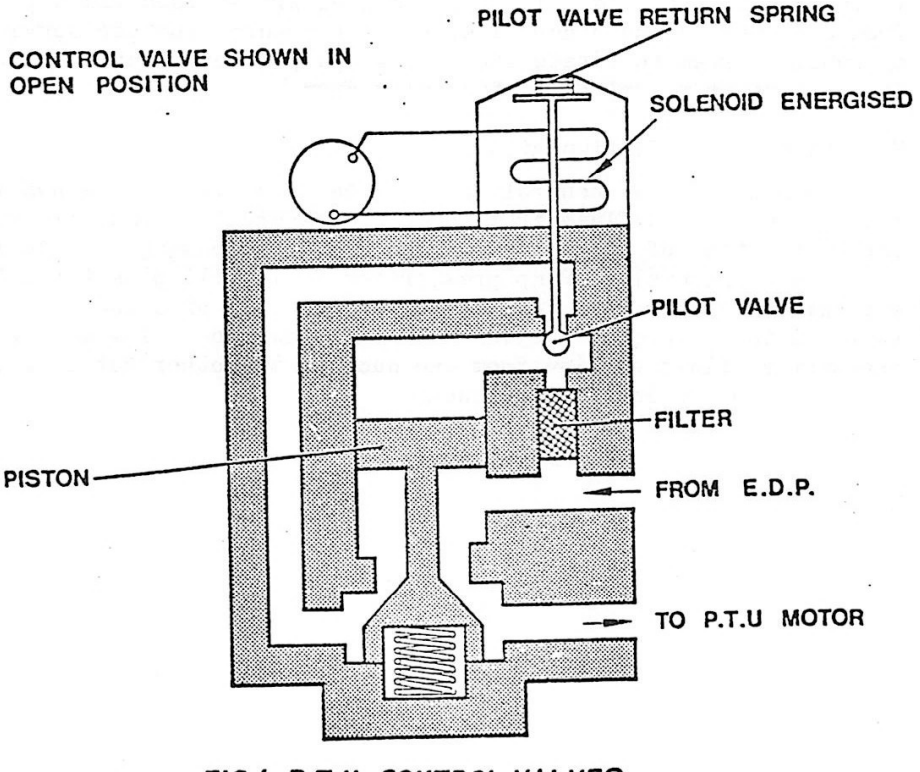

FIG.6 P.T.U. CONTROL VALVES

3. POWER TRANSFER UNIT CONTROL VALVE. (P.T.U.C.V).

3.1. Introduction and Description.

The power transfer control valve situated in the port engine bay compartment, attached to Frame 30 is an electrically operated valve which allows fluid flow in two directions - Hydraulic Power Circuit pressurised fluid flows if the valve is electrically actuated (energised) and P.T.U. pressurised fluid flows in the opposite direction when de-energised, acting as a non-return valve.

The unit has no neutral or central position and the flow of fluid is controlled by a piston type valve actuated by the fluid pressure diverted, as required, by a solenoid-operated pilot valve.

3.2. Operation. (Stop Valve Configuration).

When the solenoid is de-energised (FIG 5), the solenoid pilot valve rod is extended by its spring to thrust the pilot valve against the pilot valve pressure seat. Supply fluid is isolated from the outlet duct and fluid pressure acts on the reduced area face of the valve piston, thus closing and retaining the spring loaded valve against its seat. Fluid pressure from the full area face of the piston is relieved via the pilot valve return seat.

When the solenoid is energised (FIG 6) the solenoid pilot valve rod is withdrawn and moves off the pilot valve pressure seat forcing the pilot valve ball onto its opposite seat. Pressure fluid from the supply connection will now flow through the filter and pressure duct to act on the full area face of the valve piston to force the valve off its seat and allow a passage of pressurised fluid to flow from one duct to the other i.e. Fluid pressure from the serviceable hydraulic system to rotate the P.T.U. pump/motor which will be acting as a motor to drive the hydraulic pump.

Non-Return-Valve Configuration:

When the P.T.U. control valve is being utilised as a non-return valve, pressurised fluid from the P.T.U. hydraulic pump will flow into the bottom of the valve - around internal passageways to the pilot valve assembly. Pump pressurised fluid will pass through the open pilot valve return duct to act on the full area face of the valve piston - forcing the valve off its seat and allow a passage of pressurised fluid to flow from one duct to the other but in a reversed direction as previously mentioned.

CONTROL VALVE SHOWN IN CLOSED POSITION (N.R.V. CONFIGURATION)

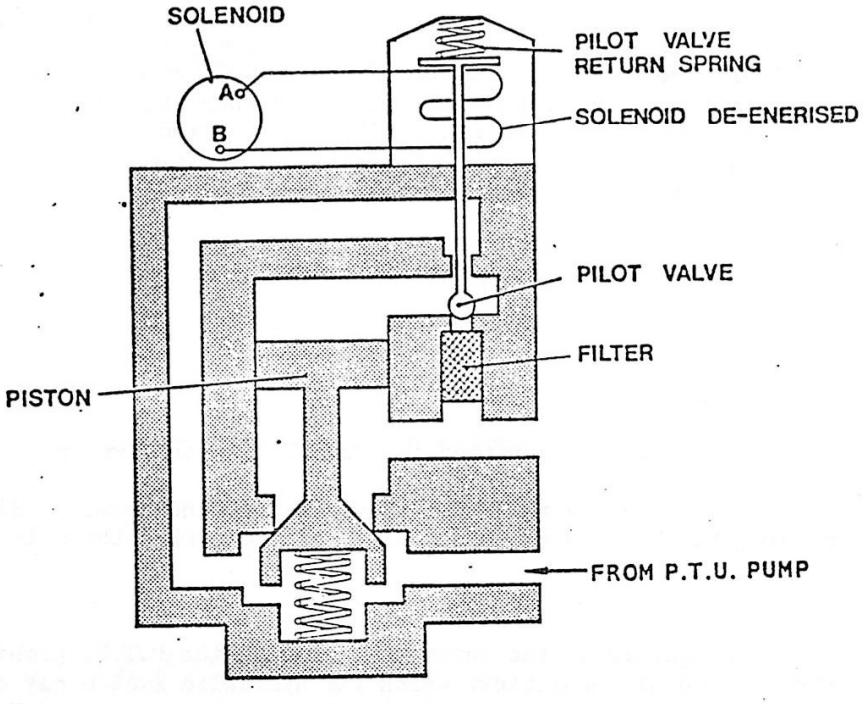

CONTROL VALVE SHOWN IN OPEN POSITION

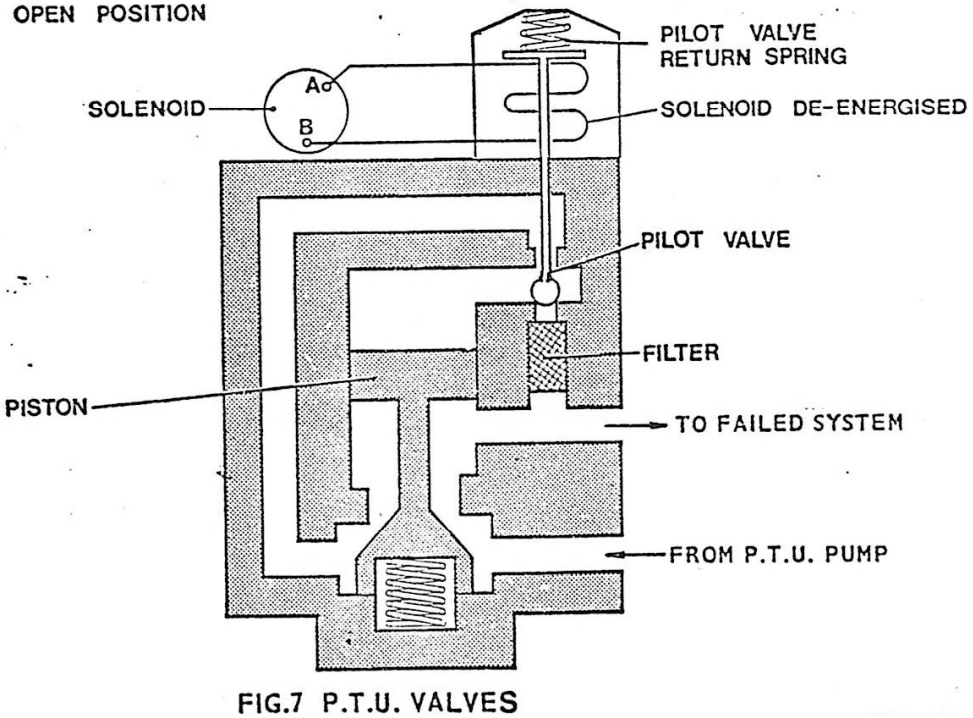

FIG.7 P.T.U. VALVES

4. TWO WAY RESTRICTOR VALVE.

4.1. Introduction and Description.

Connected in a by-pass circuit in the delivery pipe line of each Power Transfer Unit is a fixed or two way restrictor valve as previously described in Chapter 1 (Para 4.22) of 0.80 m.m. restriction. This ensures a continuous flow leak rate when the P.T.U. is in operation as a pump although no flow is required. This prevents to P.T.U. from stopping - as it is necessary to keep the P.T.U. rotating slowly to obtain a stabilised delivery pressure.

5. N.R.V's.

5.1. Introduction.

Four N.R.V's are fitted in the P.T.U system two in each circuit.

One located in the P.T.U. suction pipeline prevents direct return, to the Hydraulic Reservoir, of fluid when the unit is operating as a Motor.

One located in the return pipeline of the P.T.U. prohibiting the suction of impurities, which the hydraulic system may contain, from the main return to reservoir pipe line when the P.T.U. is running as a pump.

CHAPTER. . 4.

FLAPS AND SLATS.

CONTENTS.

1. FLAPS AND SLATS.
1.1. INTRODUCTION.
1.2. COMPONENT LIST.
1.3. DESCRIPTION.
1.4. COCKPIT CONTROLS AND INDICATION.
1.5. SYSTEM OPERATION - General.
1.6. SYSTEM OPERATION - Hydraulic.
1.7. FLAP AND SLAT PROTECTION.

2. SYSTEM COMPONENTS.
2.1. HYDRAULIC SELECTOR VALVE.
2.2. SHUTTLE VALVE.
2.3. TWO WAY RESTRICTOR.
2.4. NON-RETURN VALVES.
2.5. HYDRAULIC POWER UNIT. (Flaps).
2.6. HYDRAULIC POWER UNIT. (Slats).
2.7. SWITCHING UNIT. (Flaps).
2.8. SWITCHING UNIT. (Slats).
2.9. SCREW JACKS.

ILLUSTRATIONS.

FIG.1. FLAP & SLAT DRIVE SYSTEM.
FIG.2. SLAT SELECTOR BUTTONS.
FIG.3. SLAT & FLAP INDICATOR.
FIG.4. FLAP SELECTOR LEVER.
FIG.5. SLATS & FLAPS HYDRAULIC CIRCUIT.
FIG.6. SLATS & FLAPS ELECTRICAL.
FIG.7. HYDRAULIC SELECTOR VALVE.
FIG.8. HYDRAULIC SELECTOR VALVE.
FIG.9. SHUTTLE VALVE.
FIG.10. FLAP HYDRAULIC POWER UNIT.
FIG.11. SLAT HYDRAULIC POWER UNIT.
FIG.12. FLAP SWITCHING UNIT (End of Travel Switch).
FIG.13. SLAT SWITCHING UNIT (End of Travel Switch).

1. SLATS AND FLAPS.

1.1. Introduction.

The slat and flap controls are operated Electro-Hydro-Mechanically, each system containing a control unit, torque cross shafts,and 'Transrol' screw jacks. The two systems are interconnected electrically, preventing the flaps from operating before the slats have extended in order to avoid excessive pitch changes and loss of lift. Provision is also made for separate selections under certain conditions

The flaps can only be selected by its own selector switch or the Slat Override Switch both situated in the cockpit. The slats can be selected by either the slat or flap selector switch. Incorporated in the slat circuit is provision for automatic operation providing that appropriate switches are selected. Positions referred to of these high lift devices are:-

Slats IN.	Slats OUT.	Combat Position.
Flaps DOWN	Partial Flaps.	Flaps UP.

1.2. Component List.

1.2.1. Flaps:-

Flap Selector Switch.

Slat Override Selector Switch.

Combined Undercarriage, Slat and Flap Indicator.

Electro Hydraulic System Selector Valve.

Electro Hydraulic Directional Selector Valve.

Two Way Restrictor Valves.

Hydraulic Shuttle or Change Over Valves.

Combined Flap Hydraulic Motor Reduction Gear and Brake Clutch Assembly Control Unit.

Flap Electrical Switching Unit.

Torque Shafts and Screw Jacks.

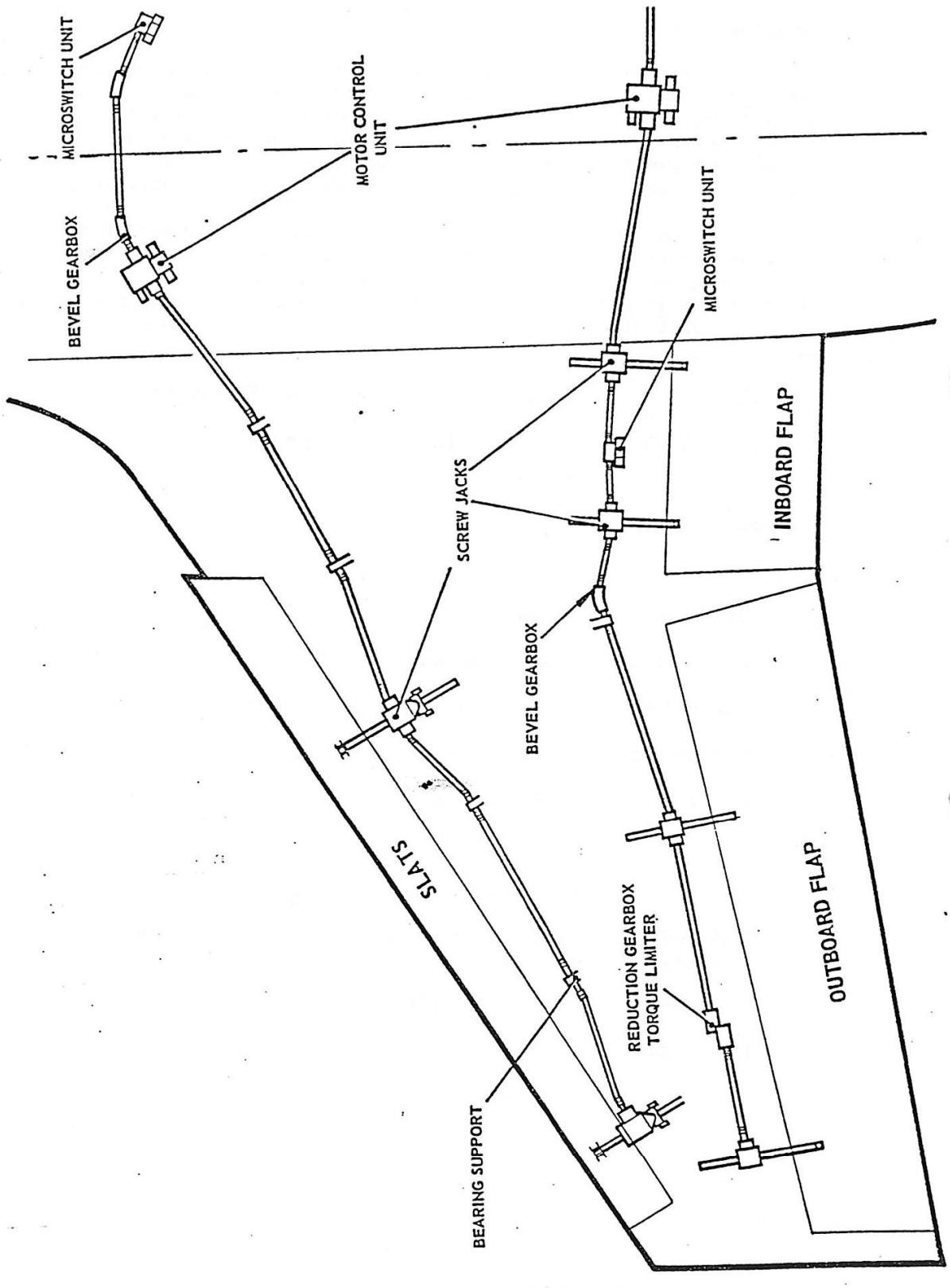

FIG.1 FLAP AND SLAT DRIVE SYSTEM

1.2.2. Slats.

The different type of switches and valves contained in the Slat Circuit are:-

Slat Selector Push Buttons.

Combined Slat Hydraulic Motor Reduction Gear and Brake Clutch Assembly Control Unit.

Slat Electrical Switching Unit.

1.3. Description.

The drive to the flaps is transmitted by torque shafts running from the control unit, located in the spine along the rear face of the mainplane rear spar to screw jacks (four per wing), which actuate the flaps. Changes in direction of the torque shaft run is achieved by the use of angled gearboxes. The layout for the slats is similar except that the control unit is located on the port side of the fuselage in line with the wing leading edge and the torque shafts, which run along the forward face of the mainplane port spar, driving two jacks per wing, to achieve large changes of direction, bevel gear boxes are used, small changes of direction are made by universal joints at various points along the shaft lengths.

Range limit switches are fitted in a switching unit connected into the torque shaft run. In the flap run, this unit is between the inboard flap jacks on the port side. In the slats it is located in the starboard upper wing in the torque shaft run.

The outer flaps extend fully to 25° against the inner flap angle of 40°(a ratio of approximately 8:5). This reduction of angle on the outer flap is produced by a bevel gear in the torque shaft run between the outer and inner flaps.

Yet another reduction gear box is fitted between the outer flap jacks which further reduces the outer jack speed (by approximately 2:1).

This gearbox, in conjunction with the previous bevel gear, ensures the outer flaps is extended to its best aerodynamic advantage.

The control units provide the turning force for the torque shafts. The flap motor is located within the spine rear of Frame 30. The Slat motor is located rear of Frame 20 on the port side beneath panel No. 301.

Both the Slats and Flaps run in 'H' section tracks, two to each unit, which guide the control surface outwards and downwards.

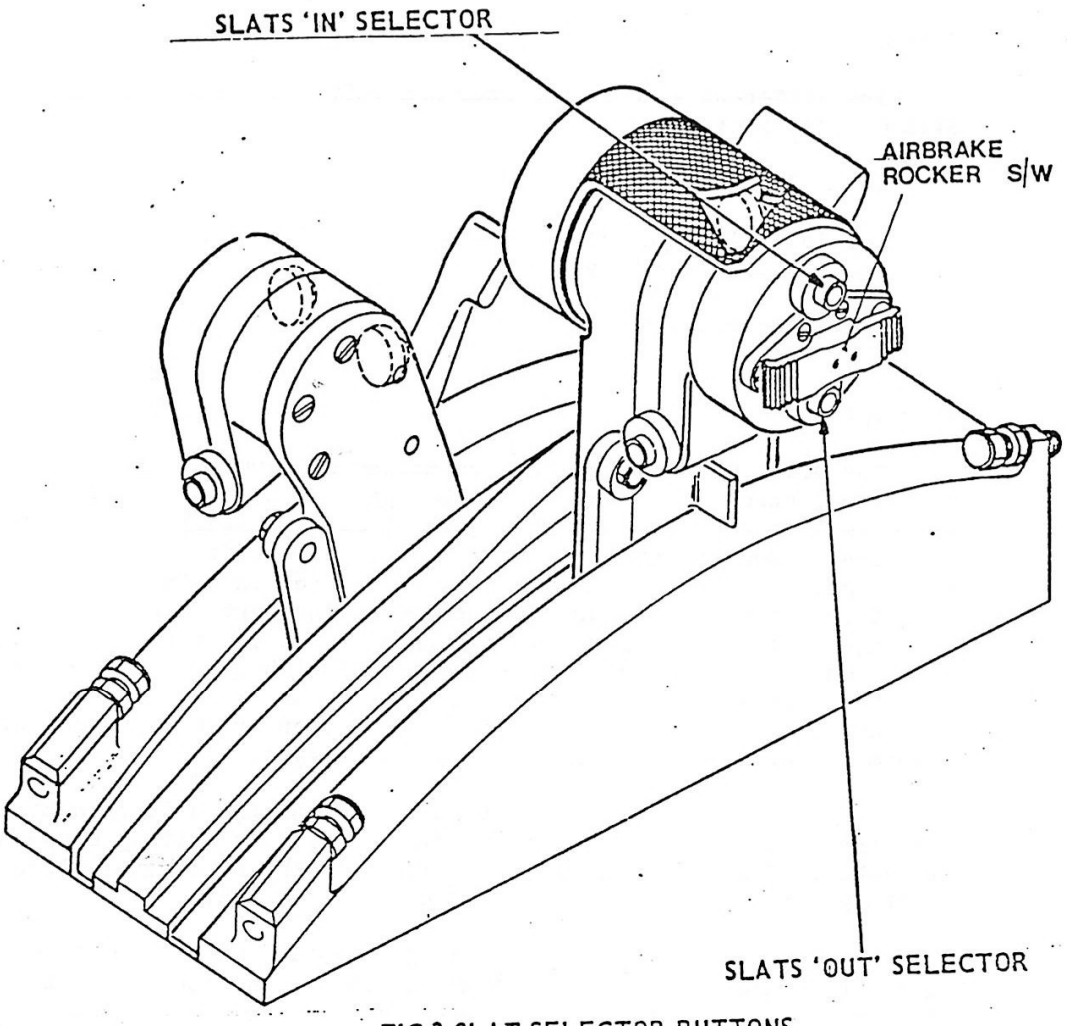

FIG.2 SLAT SELECTOR BUTTONS

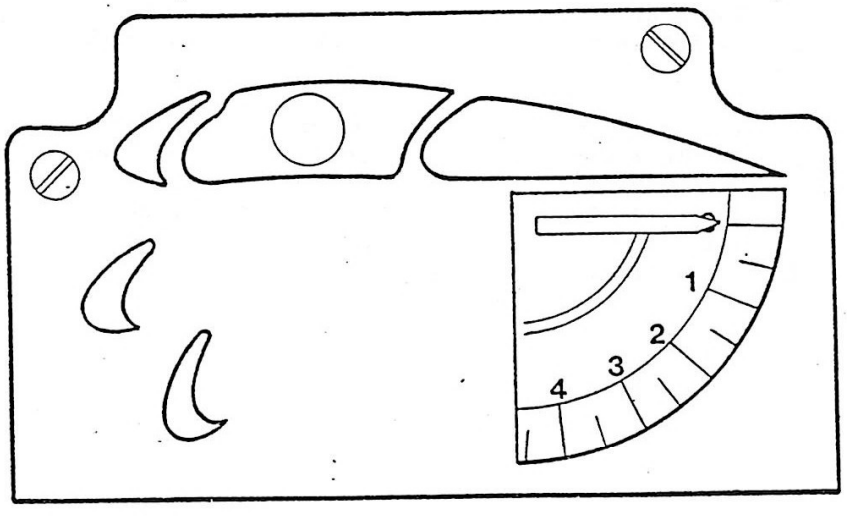

FIG.3 SLAT & FLAP INDICATOR

1.3. (contd).

The Slats have three positions: 'IN' - '¼ OUT' or 'COMBAT' and 'FULLY OUT', and travel out at 90° to the leading edge.

The Flaps have nine positions, which are: 0°, 5°, 10°, 15°, 20°, 25°, 30°, 35°, 40°, these angles refer to the inboard flaps. The outboard flap moves down to a maximum of 25° but as they are driven by the same unit as the inboard flaps, they will stop at the same time, taking on a proportional angle.

The tracks of the outboard flap extend through the lower surface of the flap when the flap is fully up.

To accommodate this extension of the flap track a fairing is fitted to the underside of the flap at the point of protrusion. On the outer flap track the tip of the fairing extends behind the trailing edge.

1.4. Cockpit Controls and Indicators.

Three modes of control exist for operating the slats, they are, flap selection, Auto selection, and Manual selection.

The slats and flap controls in the cockpit comprises:-

Two push button on the throttle lever for manual control of the slats. The upper button being the Slats In Selector and the lower button for Slats Out.

An Auto Slats Control Switch on the Port instrument panel.

A flap selection lever on the port console.

An override switch mounted adjacent to the flap selector

The condition of the flaps and slats are shown on a combined undercarriage, flaps and slats indicator panel. The slat position is indicated by BLUE lamp symbols, while flap position is shown by an AMBER unlocking lamp and a gauge. A flap warning on the CENTRAL WARNING PANEL operates when certain flight conditions are exceeded.

1.5. System Operation.

1.5.1. Slat Flap Selection.

The flying characteristics of the aircraft are such that the slats must be fully out when a flap selection is made. This is automatically achieved by operating the slats control circuit from the flap control lever.

1.5.1. (contd).

The slats are operated to one of two positions, when the flap selector lever is used:-

Fully out (23°) when the flap lever is moved to a Down selection.

Combat (11°) approx. when the flap lever is returned to the 'UP' position and the flaps have retracted to the fully up datum.

1.5.2. Slat Auto Selection.

The auto slat facility provides automatic slat selection, to improve lift at low speeds, when the angle of attack is greater than 5°, and provides the opposite selection when the angle of attack reduces to 4°

Auto operation of the slats is selected by pressing a auto slat selector switch located on the port instrument panel. The switch facia is idented SLATS and illuminated amber. When the switch is selected to auto, the illumination is extinguished. The system is inhibited while the flaps are down and during aircraft speeds in excess of 580 knots. When auto is selected the system will remain in auto unless cancelled by, a manual selection, or a fault condition whereby, the slats are not fully in at speeds greater than 580 knots, and whenever the d.c. power is switched off.

In the auto mode the slats operate automatically to the:-

Combat (9°) position, when the aircraft incidence exceeds 5°

Fully in (0°) position from combat, when the aircraft incidence becomes less than 4°.

Fully in (0°) position from combat, when the aircraft speed exceeds 580 knots if already in an AUTO OUT position.

1.5.3. Slat Manual Selection.

A manual selection facility in the form of two push buttons on No.2 Eng.throttle lever enables the pilot to select the slats to the combat or fully in position. Whenever a manual selection is made the auto slat system is immediately cancelled, indicated by the illumination of the auto slat switch.

Manual selection of the slats to the combat or fully in position is inhibited until the flaps are in the fully up position. Combat selection is also inhibited at aircraft speeds greater than 580 knots.

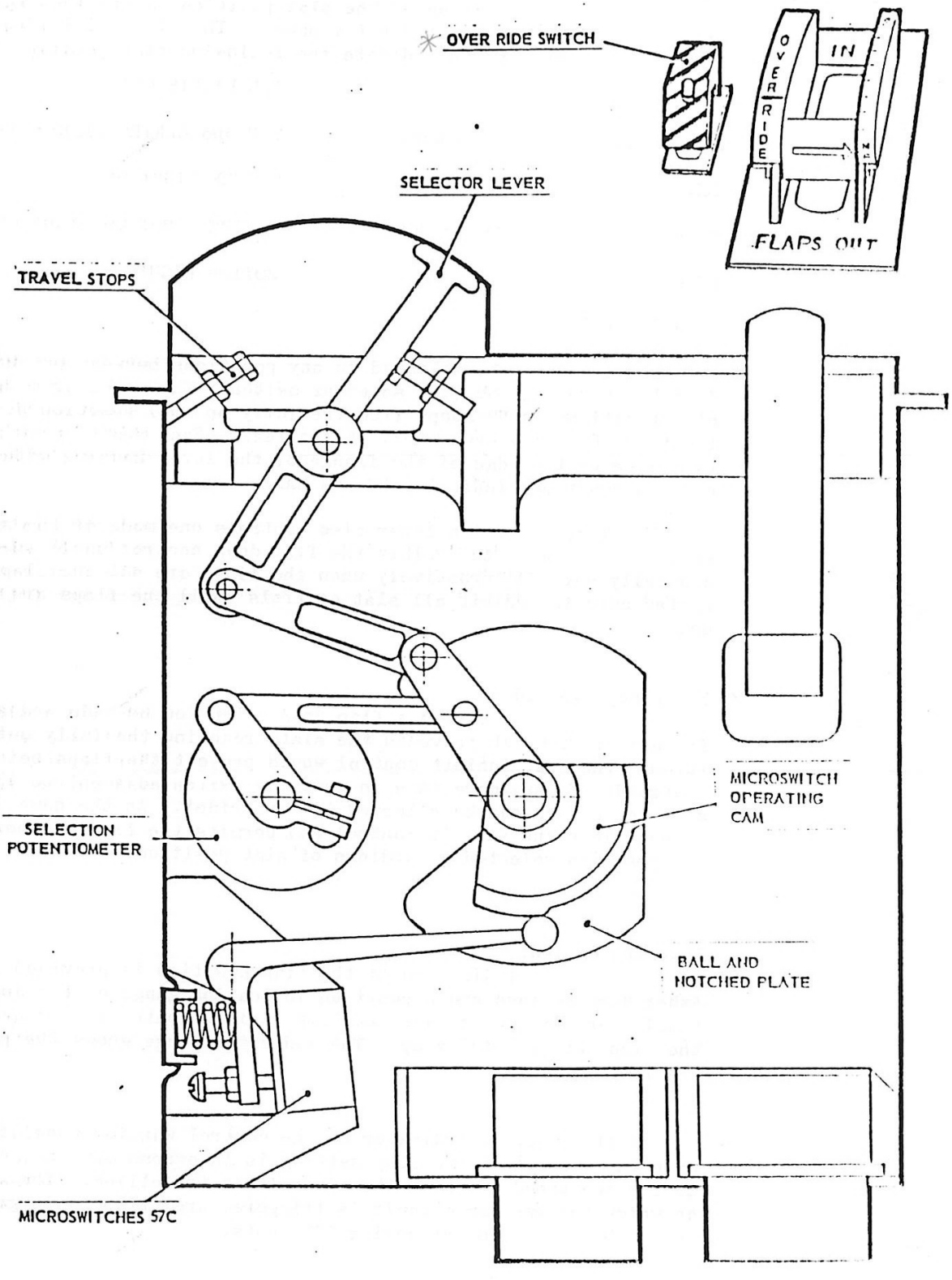

FIG.4 FLAP SELECTOR UNIT

1.5.3.(cont) Slat Indication:

Indication of the slat position is provided by the slat BLUE LIGHTS on the indicator panel. The Lights illuminated BLUE or extinguished to indicate the following slat positions:-

'FULLY IN'	ALL LIGHTS OUT.
Between Fully In and Combat.	TOP and CENTRE Lights ON.
COMBAT.	CENTRE LIGHT ON.
Between Combat and Fully OUT.	CENTRE & BOTTOM LIGHT ON.
FULLY OUT	BOTTOM LIGHT ON.

1.5.4. Flap Control.

The flaps can be selected to any positions between 0° and 40° down by operating the flap selector switch. The selector lever has nine positions in 5° steps from the fully up (0°) position at the front to the fully down (40°) at the rear. Each position is marked by a line on the edge of the flange of the lever housing with the extreme positions indicated (0 and MAX).

The flap selection lever also controls one mode of the slats system, which acts to inhibit the flap down control until the slats are fully out. Alternatively when the flaps are out the flap control system acts to inhibit all slat controls until the flaps are fully up.

Emergency Override:

Should a flap down selection be made and a slat failure occur which prevents the slats reaching the fully out position. The slat inhibit control would prevent the flaps being operated. To overcome this an override switch adjacent to the flap selector switch can be selected to 'override'. As the name implies it overrides the inhibit control and permits the flaps to move to the position selected regardless of slat position.

Flap Indication:

Indication of the flap position is provided by a Amber Warning lamp and a position indication gauge on the indicator panel. When the amber warning lamp is illuminated it indicates that the flaps are not fully up. The indicator gauge shows the position the flaps are at.

A flap warning indicator on the control warning panel is used to warn the pilot that the flap setting is in excess of that, it should be for the speed at which the aircraft is travelling. The values at which the warning circuit is triggered are, flap angle greater than 8.5^{o}, at speeds exceeding 260 knots.

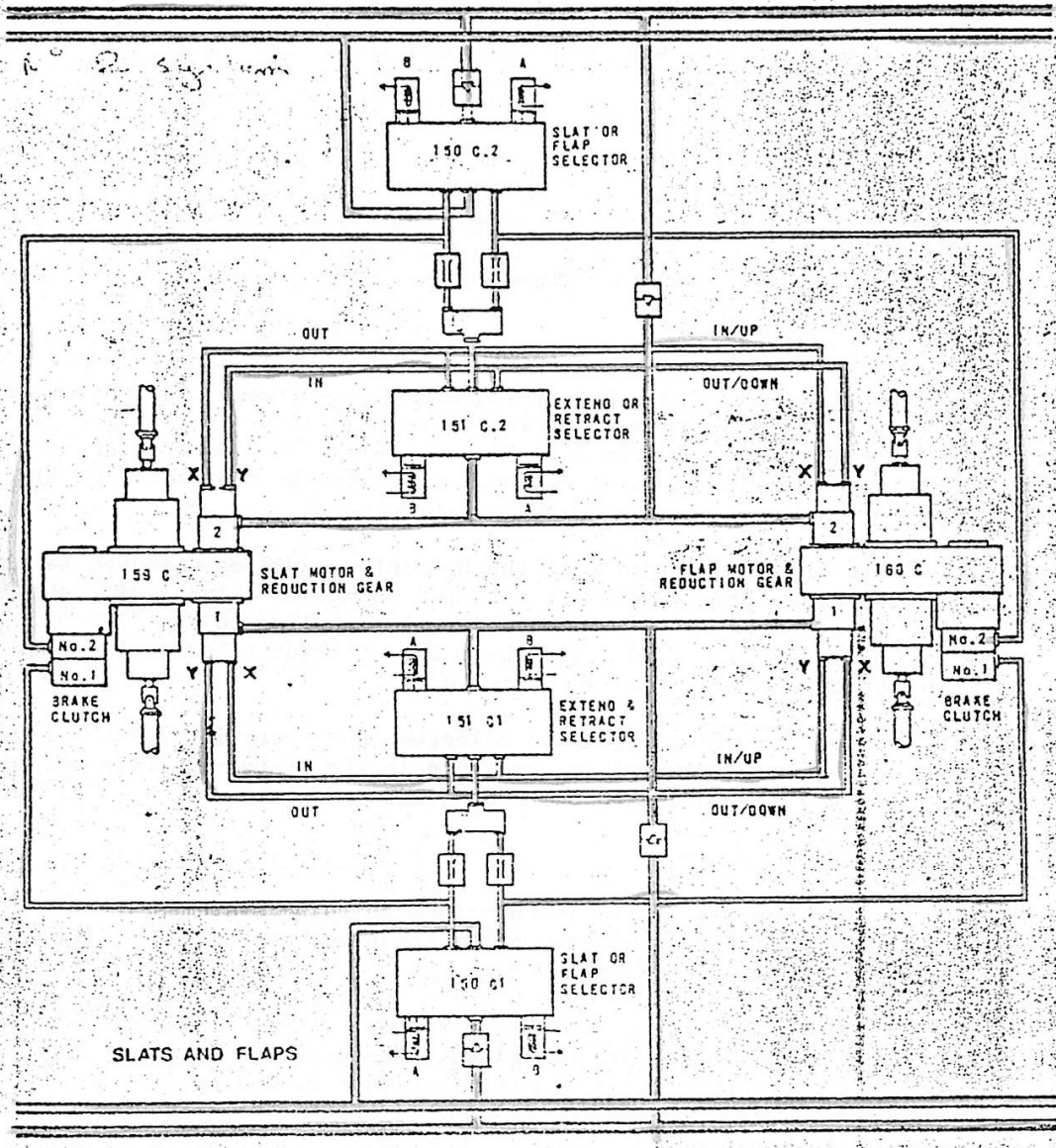

X-X } HYD LOCKS
Y-Y }

FIG.5 SLATS & FLAPS HYDRAULIC CIRCUIT

1.6. Operation Hydraulically.

1.6.1. Hydraulic Operation.

The hydraulic supply and control for the slat and flap system is duplicated. Under normal conditions No.1 and No.2. services hydraulic systems are used to provide the driving power to the system being operated. In the event of a No.1 or No.2 system failure the slats and flaps will continue to operate on a single system, but at a slower rate.

1.6.1.1. Slats OUT operation.

The slat flap valve is energised on both 'system selectors' 150 C1 and 150 C2, which direct hydraulic pressure to lift the brake on the slat power unit 159c. Simultaneously hydraulic pressure is directed via the shuttle valves to the ' direction selectors' 151C1 and 151C2.

Selection valve A, on the 'direction selector' 151C1, and selector valve B, on selector 151C2, are energised. The operation of which directs hydraulic pressure to slat motor 1, via line Y. and to slat motor 2, via line X. The two motors are driven in unison to produce a unidirectional drive to the slat rods, which in turn move the slats to the out position.

It will be noticed that the hydraulic supplies directed to the slat motors 1 and 2 are also directed to motors 1 and 2 of the flap hydraulic power unit 160C. However the supplies to the flap motors are both via the X lines and the motors attempt to drive in opposite directions producing a hydraulic lock.

When the slats reach the selected 'out' position all the selector valves are de-energised, pressure in the system is relieved, which causes the slat brake to be re-applied.

1.6.1.2. Slats IN Operation.

The slat flap valve is energised on both 'system selectors' 150C1 and 150C2, and the same sequence takes place as that described in Slats OUT operation.

Selection valve B, on the 'direction selector' 151C1, and valve A on selector 151C2, are energised. The operation of which directs hydraulic pressure to slat motor 1 on line X, and to slat motor 2, on line Y. The two motors will work in unison to drive the slats to the in position.

A hydraulic lock is produced on the flap motors in the same manner as that described for slats out. The only difference being, that this time the two Y lines are used.

When the slats reach the selected 'in' position all the valves are de-energised, pressure in the system is relieved, and the slat brake is re-applied.

1.6.1.3. Flap Down Operation.

The slat flap valve is energised on both system selector's 150C1 and 150C2, which direct hydraulic pressure to lift the flap brake on the flap power unit 160c. Simultaneously hyd.press. is directed via the shuttle valves to the direction selectors 151C1 and 151C2.

Valve A, is energised on both 'direction selectors' 151C1 and 151C2, which directs hyd.press. to flap motor 1, via line X. and to flap motor 2, via line Y. The motors operate in unison to drive the flap rods, which in turn move the flaps to the down position.

A hydraulic lock is produced on the Slat Motors by the Y lines, in the same manner as that described previously.

When the flaps reach the selected down position, all the valves are de-energised pressure in the system is relieved and the flap brake is re-applied.

1.6.1.4. Flap Up Operation.

The difference between the down operation as previously described and the UP operation, is, Valve B is energised on the 'direction selectors' instead of valve A. This changes over X and Y lines to Motor 1 and 2, changing the direction of the drive, and the flaps are moved to the UP position.

1.6.1.5. Flap Partial Selection.

When a flaps DOWN position if not more than 35° is selected on the flap selector. The selector lever moves a command potentiometer to the datum selected. Simultaneously the lever operates three micro switches inside the unit. Attached to the flaps is a second potentiometer recording actual flap degree angle, so that when both potentiometers register the exact amount of resistance - electrical supply to the hydraulic selector valves is cut off. Thus the selector valves become de-energised and revert to neutral with the flaps remaining in this pre-selected position.

1.7. Flap and Slat Protection.

1.7.1. Flap Warning.

If the flaps are selected out to a position greater than 8.5° a warning micro switch in the flap end of travel unit is operated to a flap $> 8.5^{\circ}$ condition. The contacts of which change over to arm a warning circuit, connecting an electrical supply to an indicated air speed switch unit (I.A.S. Unit). Should the aircraft speed exceed 260 knots the I.A.S. unit will operate to connect the supply to a red 'FLAP' warning caption on the central warning panel. It will be appreciated that a warning indication will not be given, should either, the flaps be selected to a position of less than 8.5° or the aircraft speed is less than 260 knots.

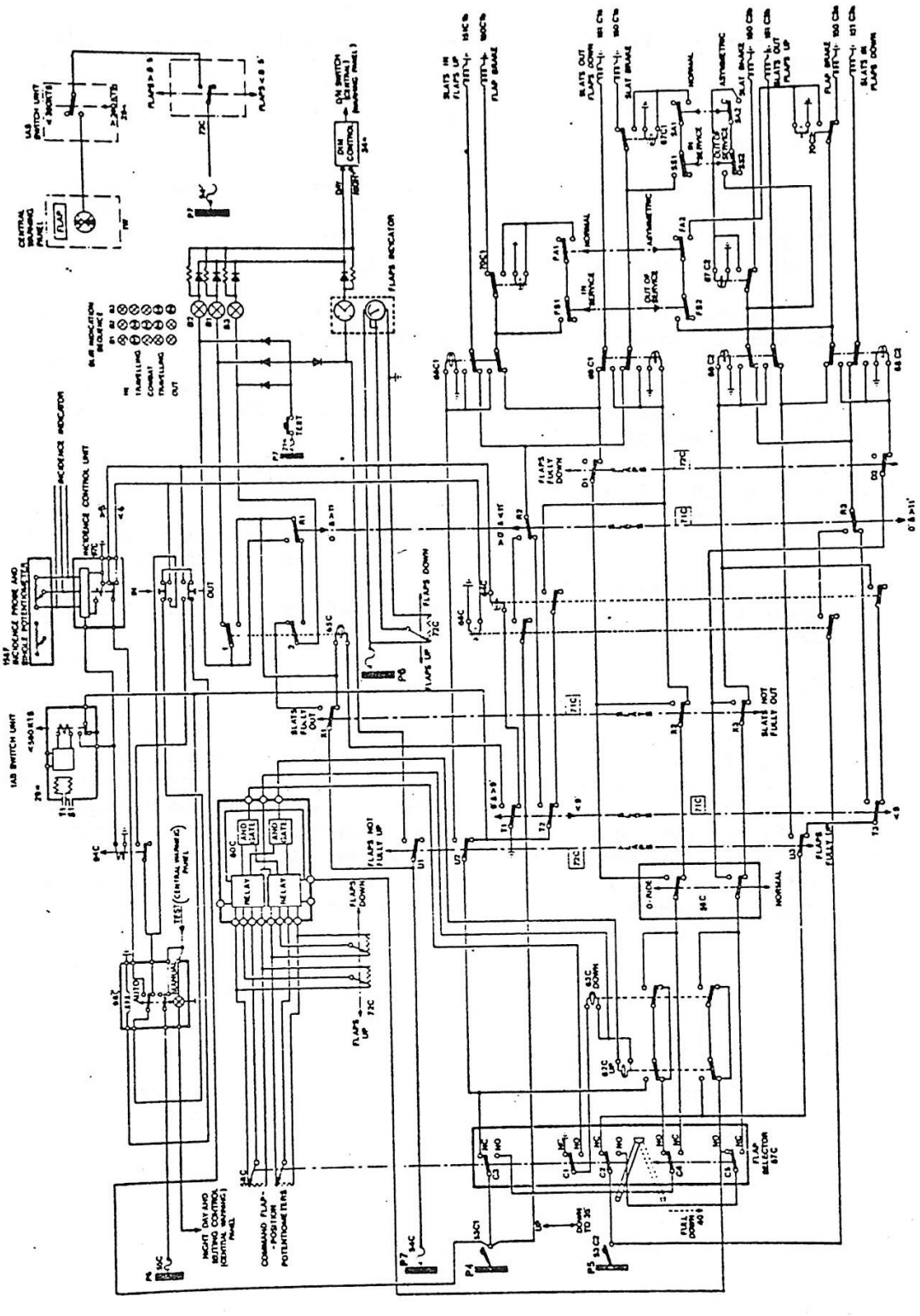

FIG.6 FLAPS AND SLATS ELECTRICAL

1.7.2. Flap Asymmetric Protection.

The asymmetric protection circuit provides to stop the hydraulic power unit should the drives to the port or starboard flaps be restricted, such as to produce a differential torque greater than 8 lbs.ft. Each time the hydraulic power unit (160C) operates to drive the flaps, the brake is released which in turn (at the fully released position) operates two micro switches, to give an 'IN SERVICE' condition. In the event of a torque differential in excess of 8 lb.ft. two more micro switches are operated to give an indication of flaps asymmetric condition. An asymmetric condition will stop the flap travel at that point because electrical supply to the circuit will be cut. In an attempt to recover flap control a flap selection must be made in the opposite sense then re-selected to its original position.

1.7.3. Slat Asymmetric Protection.

The slat asymmetric protection circuit acts to shut down the slat hydraulic system, in exactly the same manner as that described for the flaps; should a torque differential greater than APPROX 9.6 - 11.8 lbs/ft exist between the PORT & STBD slat drives.

1.7.4. Auto Slat.

In the event of the SLATS being OUT (COMBAT position) at speeds in excess of 580 knots with the AUTO-SLAT system selected irrespective of the angle of incidence the slats will automatically retract to the FULLY IN position.

2. SYSTEM COMPONENTS.

2.1. Hydraulic Selector.

2.1.1. Introduction.

This selector is electrically operated to direct fluid to either of two services and to simultaneously open the return line from the other service. The main flow of fluid is controlled by a bobbin type valve operated by the fluid directed, as required, by two pilot valves each operated by a solenoid. When both solenoids are de-energised, the bobbin is in the central position so that supply fluid to the services is cut-off, but return fluid from the services is able to flow to the return connection.

2.1.2. Description.

The body of this unit houses a bobbin valve assembly and two identical pilot valves each connected by fluid ways to pipe adaptors which provide for connection purposes.

The bobbin valve assembly consists of a sealed liner in which the bobbin operates to direct fluid through drillings in the liner to the selected connection ports. The bobbin valve is moved by two sealed opposing actuating pistons, positioned one at each end of the bobbin and each housed within a centralising piston. The centralising pistons each operate in the sealed bore of an end fitting which is screwed in to secure the liner in a centralised position. Each centralising piston is loaded at its outer end by a spring interposed between the centralising piston and a spring guide in the end fitting.

Each pilot valve assembly comprises of a spring, filter, two sealed valve seats and a spacer, shimmed for fitted spring length and ball movement. A push rod locates through the spacer and the outer valve seat to contact a ball valve which operates between the two valve seats. Centrally surmounting each pilot valve assembly is a solenoid, retained by four cap screws, with its screw abutting a spring loaded rod which it depresses to contact the pilot valve push rod and actuate the pilot valve when energised. The armature screw provides for adjustment and is surmounted by a sealed cap, while a plug receptacle is retained by four cap screws to receive the plug carrying the electrical supply from the aircraft to the unit.

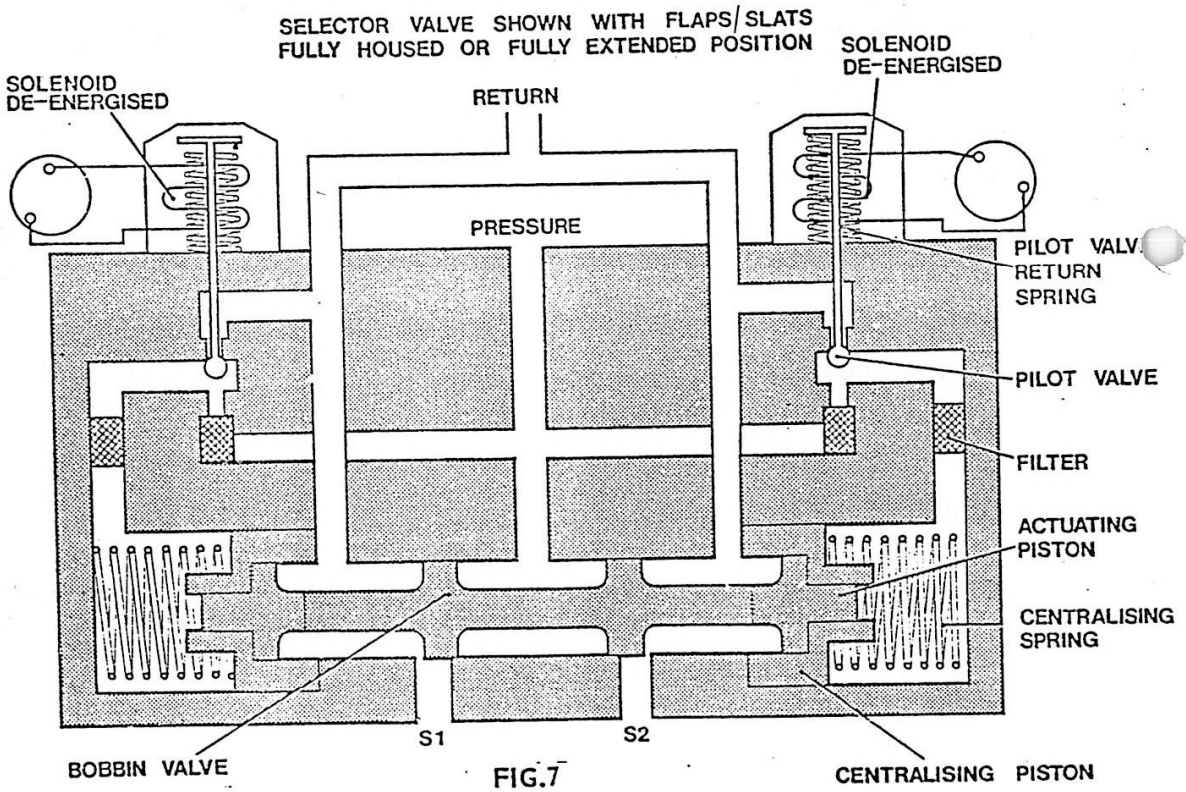

FIG.7

SELECTOR VALVE TYPE 8675 MK1
(FLAPS/SLATS)

2.1.3. Operation.

When both solenoids are de-energised Fig 7, the solenoid armature in each pilot valve is withdrawn from the ball valve seat the spring loaded rod and supply fluid from connection P unseats the ball valve and flows via the fluid ducts Z to act on the centralising pistons which become hydraulically balanced. The bobbin is thus centralised, and the pressure port in the liner is closed by the bobbin to prevent flow from connection P to either service connection, while permitting the passage of fluid from the service connections to the tank connection.

When either solenoid is energised Fig.8, the solenoid armature of the applicable valve is forced against the spring loaded rod to thrust the ball valve against the inner valve seat. Supply fluid is thus cut off from duct Z and the relevant pistons but a path is now open for fluid behind these pistons to flow to the tank connection. Pressure now acting on the opposite actuating piston moves the bobbin together with the now 'idle' actuating and centralising pistons which are moved towards the spring guide, thus displacing fluid along duct Z through the open outer valve seat to the tank connection. The bobbin is now aligned with the service connections to permit the passage of fluid to the relevant service connection and the return of displaced fluid from the other service connection to the tank connection.

In the event of low pressure in the supply line, the spring at each end of the bobbin valve assembly will centralise the bobbin and prevent positive selection.

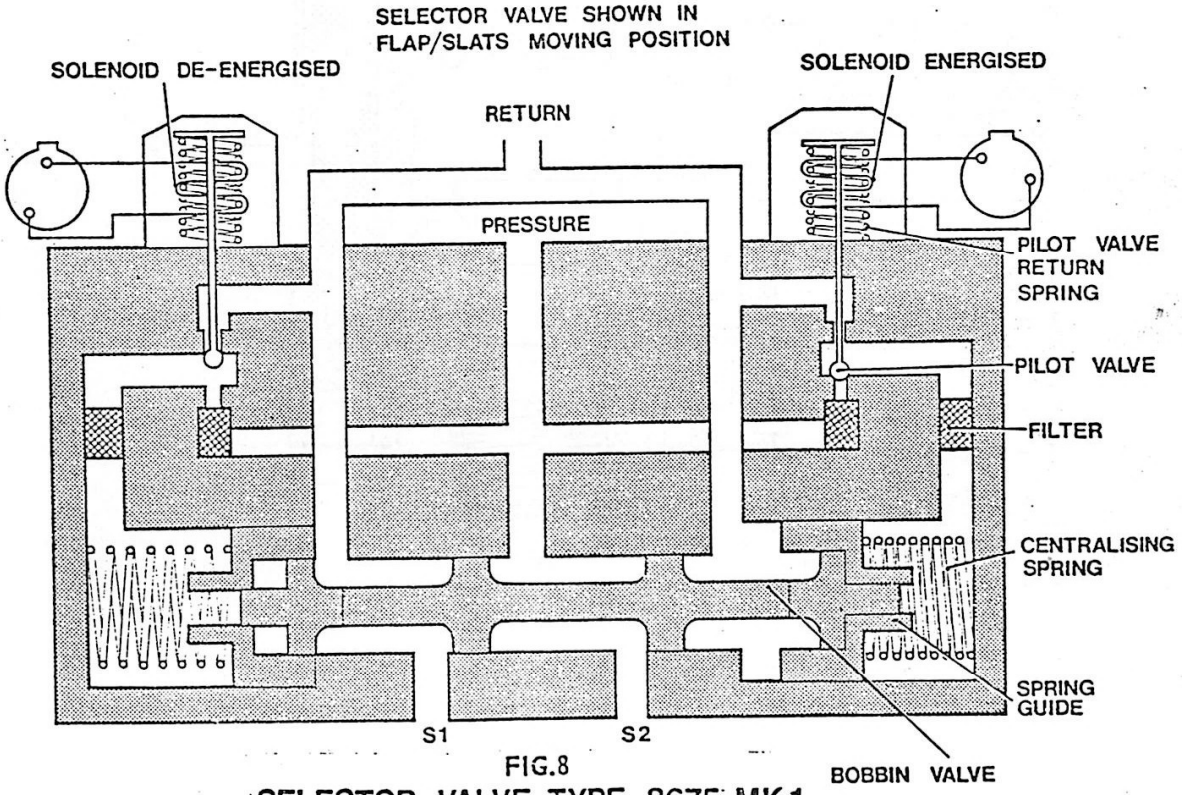

FIG.8

SELECTOR VALVE TYPE 8675 MK1
FLAPS/SLATS

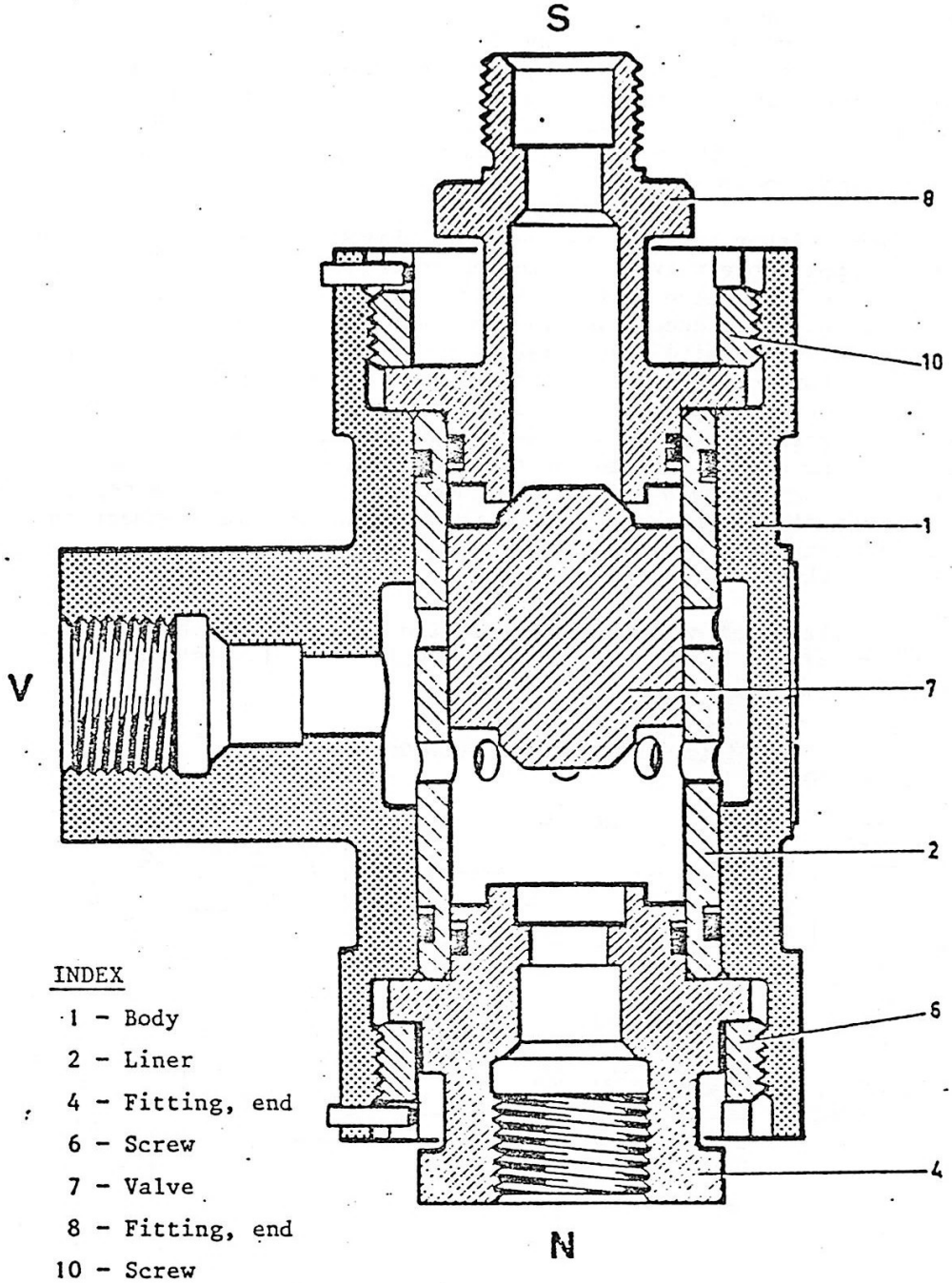

INDEX

1 - Body
2 - Liner
4 - Fitting, end
6 - Screw
7 - Valve
8 - Fitting, end
10 - Screw

FIG.9 SHUTTLE VALVE

2.2. Shuttle Valve.

2.2.1. Introduction and Description.

Two shuttle valves, fitted one in each hydraulic system No 1.and No.2. between the two selector valves (System and Direction Selectors) are installed to direct pressurised fluid to the flaps and slats Motor Units via the direction selector, without risk of interference between their circuits. The valve consists of a body housing a liner in which a piston is free to slide in either direction dependant upon fluid pressure acting on it.

2.2.2. Operation. (FIG 9).

Fluid supply through Port N:

The hydraulic pressure inlet through port N moves the valve (7) against the seat of the end fitting (8) port S is isolated.

The fluid flows through Port V, through a series of holes drilled in the liner (2).

Fluid supply through Port S:

The valve (7) is moved against the seat of the end fitting (4) by the hydraulic pressure inlet in S.

During its displacement in the liner (2), the valve (7) first isolates the supply system connected to N and then clears another series of holes, thus allowing communication between the supply system connected to S and the service system connected to V.

2.3. Two Way Restrictor Valve

2.3.1. Introduction.

Two way restrictor valves are fitted to ensure correct sequencing of the circuit and slow down the system operation, i.e. ensuring that the Control Unit brakes are released before pressure is directed to operate and rotate its motor unit.

2.4. Non-Return Valves.

2.4.1. Introduction.

Four Non-Return Valves are installed within the flap/slat hydraulic circuit to prevent back pressure in the system return lines effecting the system operation and also to maintain a volume of fluid in the return lines from the motors, sufficient to lubricate them, should one of the hydraulic systems fail which would otherwise run dry.

2.5. Flap Hydraulic Power Unit.

2.5.1. Description and Operation.

The unit consists of two hydraulic motors driven by hydraulic pressure from No.1. and No.2. hydraulic systems, a braking unit with its own electrical switch unit containing levers to operate an 'IN SERVICE' micro switch on one side, with a reduction gear assembly linking it to a drive shaft and an asymmetric switch unit.

The unit interlinks the drive from the two hydraulic motors, reducing the speed and transmitting it to the drive shaft . One motor is driven from No.1. hydraulic power system and the other from No.2. hydraulic power system.

When the supply to the hydraulic motors is interrupted, a brake which is spring-applied and hydraulically released, locks the drive shaft and prevents rotation. The brake is released by hydraulic pressure directed simultaneously to the brake and to the motors. In addition, the withdrawal of the brake piston operates the 'IN SERVICE' switch unit the contacts of which change over to arm the 'ASYMMETRIC' switch unit .

The drive to the transmission is taken through an 'Autoloc' roller clutch controlled by a two-cam system (one driving, the other driven) and maintained in contact, normally non-sliding, by a calibrated spring. In the event of too high an opposing torque on one main plane, or both, the cams slide away from each other, and their combined movement causes the 'Autoloc' to declutch, operating the 'ASYMMETRIC' switch unit, the contacts of which change over to de-energise the electro-hydraulic control.

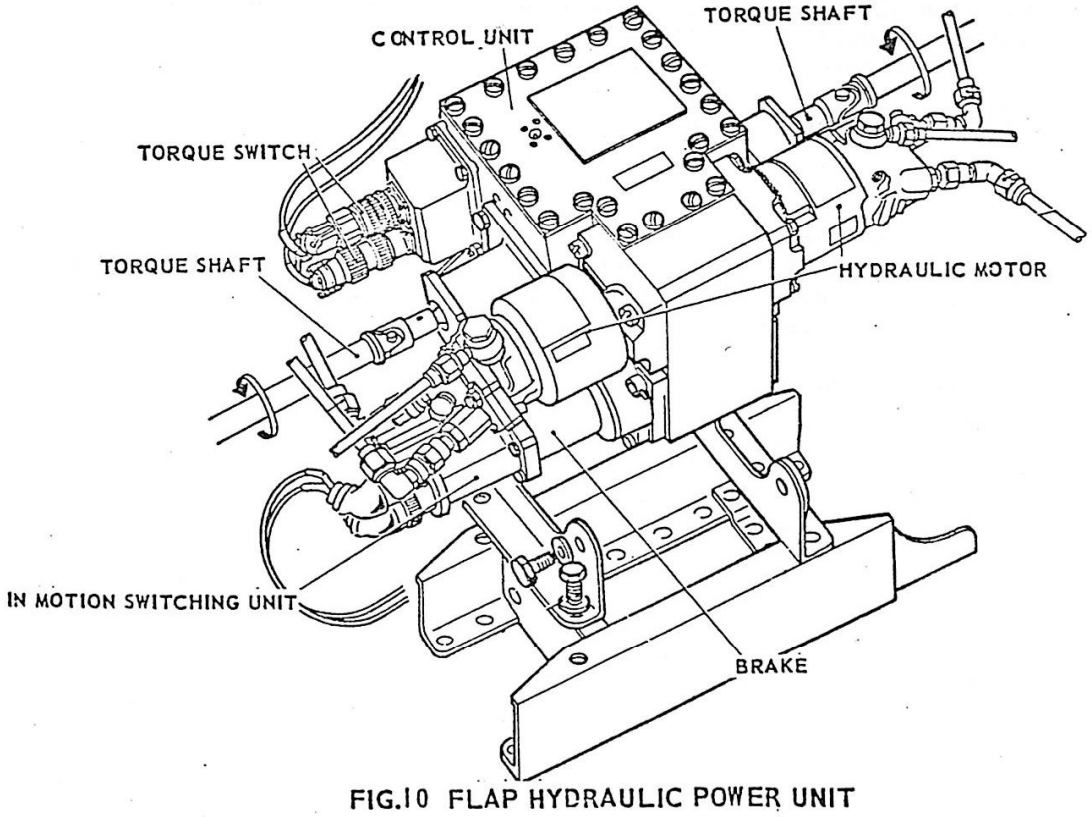

FIG.10 FLAP HYDRAULIC POWER UNIT

2.6. Slat Hydraulic Power Unit.

2.6.1. Description and Operation.

The Slat hydraulic power unit is similar to that for the flaps. The only difference between these AVIAC Power Units being confined to drive motor, shaft speeds and overall gearing.

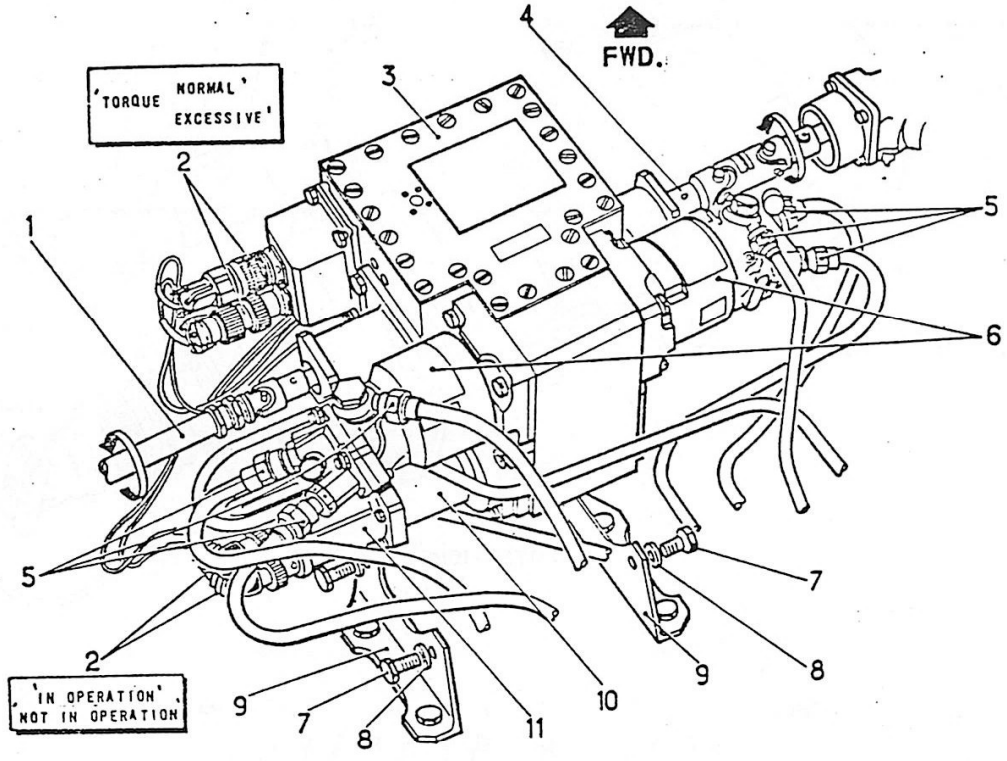

1 DRIVE SHAFT
2 ELECTRICAL CONNECTORS
3 SLATS CONTROL UNIT
4 DOUBLE UNIVERSAL JOINT
5 HYDRAULIC PIPELINES
6 HYDRAULIC MOTORS
7 BOLT
8 WASHER
9 MOUNTING BRACKET
10 BRAKE
11 MICROSWITCH HOUSING

FIG.11 SLAT HYDRAULIC POWER UNIT

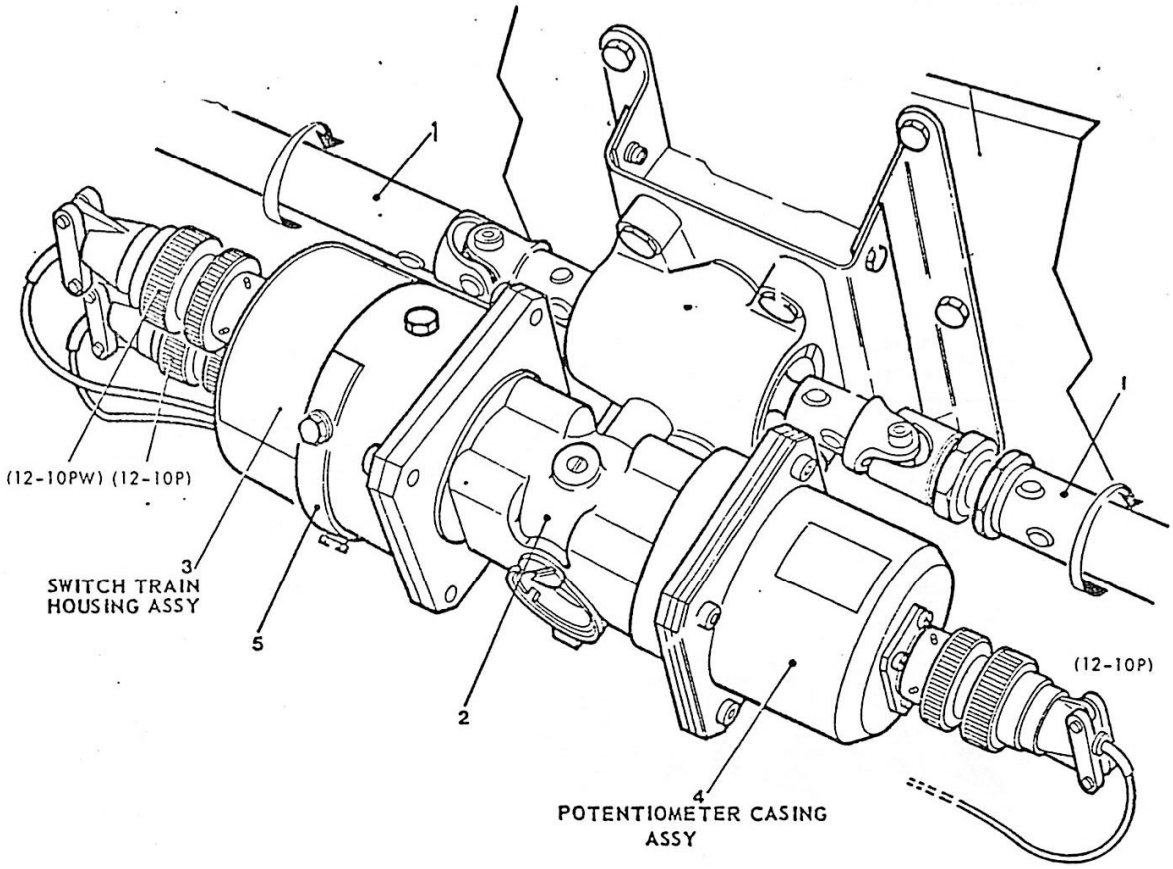

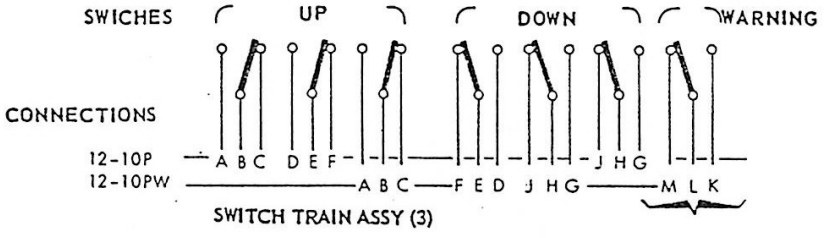

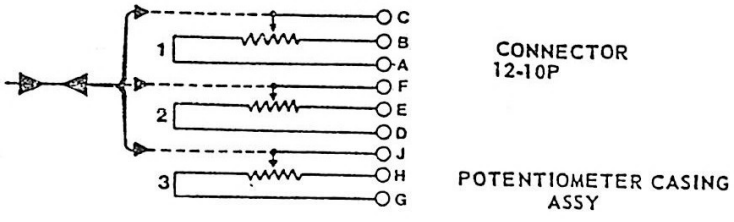

FIG. 12 FLAP SWITCHING UNIT

2.7 Flap Switching Unit (End of Travel Switch Unit)

2.7.1. Description & Operation.

The function of the unit is to monitor flap movement and de-energise the electro hydraulic control valves when a flap position of fully down, or fully up is reached.

Monitor flap movement and transmit the position to both the flap electronic control unit and the flap position indicator gauge.

Monitor a flap not fully up position and transmit the condition to the flaps indicator light.

Monitor a flaps down position greater than 8.5^{o} and transmit the condition to a flap warning system.

Isolate the slat control circuit, until the flaps are in the fully up condition.

The switch unit interlinks the transmission rods,(1), to the port flaps. Any motion of the transmission rods is transmitted via a reduction gear assembly (2) to operate the micro-switch assemblies contained in the switch train housing assembly (3) and the potentiometer wiper in the casing assembly. (4).

The switch train housing assembly (2) consists of three separate switch assemblies two of which comprise three micro switches per assembly, whilst the third assembly is for a single micro switch. The function of each assembly is different being classified as follows:-

The 'DOWN' assembly which acts to control the flaps to the fully down position 40°.

The 'UP' assembly, which acts to control the flaps to the fully UP position 0°, transmit indication information, and isolate the slat electrical control circuit.

The 'WARNING' assembly, which acts to transmit a warning condition when a flaps down position greater than 8.5^{o} is reached.

In-situ adjustment in the form of slider (5) enables the fully down datum setting to be changed.

The potentiometer casing assembly (4) consists of a shaft driven three track tandem potentiometer. Track one acrs as the flap position transmitter for the flap indicator gauge. Tracks two and three act as flap position transmitters for the electronic flap control unit. In-situ adjustment enables the potentiometer to be set to the true flap position.

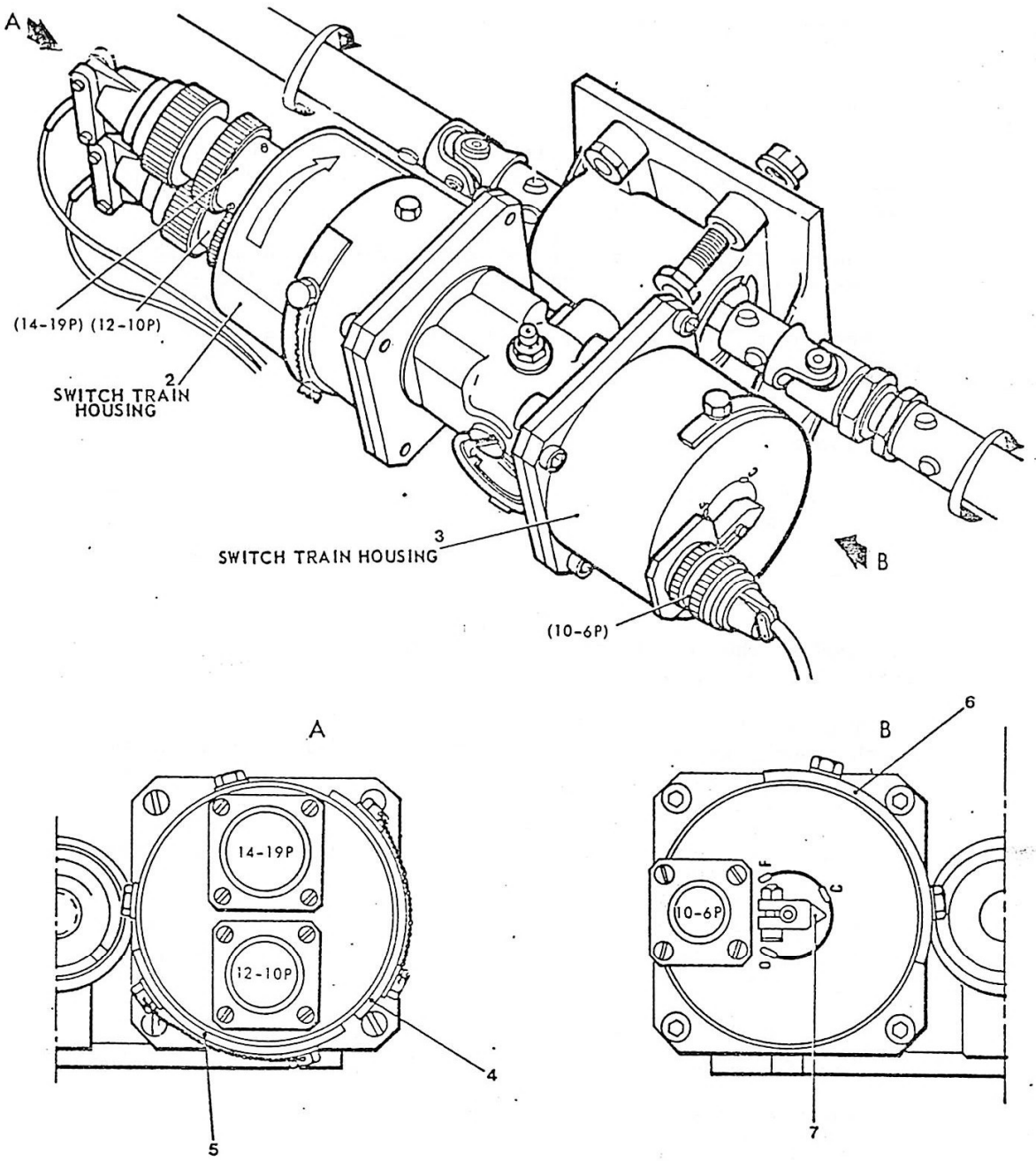

FIG.13 SLAT SWITCHING UNIT

2.8. Slat Switching Unit (End of Travel Switch Unit)

2.8.1. Description and Operation.

This Unit is connected into the Slat drive shaft controls and records drive shaft travel to electrical switches.

The function of unit is to:-

Monitor the slat movement and de-energise the electro-hydraulic control valves when the selected slat position is reached.

Isolate the flaps down selection circuit until the slats are in the fully out condition.

Monitor the slat movement and transmit the position to the slat indicator panel.

Monitor the slats 'IN' position, to maintain a auto slat selection above 520 knots.

The switch unit interlinks the transmission rods to the starboard slats. Any motion of transmission rods is transmitted via a reduction gear assy, (1) to operate micro switch assemblies contained in two switch train housing assemblies. (2) and (3).

The switch train housing assembly (2) consists of three separate switch assemblies, each of which comprises three micro switches. The function of each assembly is different, being classified as:-

The 'EXTEND' assembly, which acts to control the slats to the fully extended position (23°) and transmit indication information.

The 'COMBAT' assembly, which acts to control the slats to the combat position (9°) and transmit indication information.

The 'RETRACT' assembly, which acts to control the slats to the retracted position (0°) and transmit indication information.

In-situ adjustment in the form of slider (4) and slider (5). enables the extend datum and combat datum settings to be changed.

The switch train housing (1) consists of a single switch assembly of two micro switches which act to transmit a 'slats retracted' condition to the auto slats control circuit. In-situ adjustment in the form of slides (6) enables the switch datum to be changed. A pointer (7) on the face of the housing indicates the status of the end of travel switch unit. Position 'F' being the retracted state, 'C' the combat state and '0' extended state.

CHAPTER. 5.

UNDERCARRIAGE.

CHAPTER. 5.

CONTENTS.

1. UNDERCARRIAGE.
1.1. INTRODUCTION AND DESCRIPTION.
1.2. CONTROLS AND INDICATIONS.
1.3. COMPONENTS WITHIN THE CIRCUIT.
1.4. OPERATION.

2. SYSTEM COMPONENTS.
2.1. NORMAL/EMERGENCY MECHANICAL SELECTOR VALVE.
2.2. ELECTRO/HYDRAULIC SELECTOR VALVE.
2.3. RELAY VALVE.
2.4. ELECTRO HYDRAULIC LOCK UNITS.
2.5. VARIABLE AND TWO WAY RESTRICTORS.
2.6. NON-RETURN VALVE.
2.7. NOSE U/C OPERATING JACK.
2.8. NOSE U/C DOOR OPERATING JACK.
2.9. MAIN U/C OPERATING JACK.
2.10. MAIN U/C DOOR FWD OPERATING JACK.
2.11. MAIN U/C REAR OPERATING JACK.
2.12. MAIN U/C TELESCOPIC BRACING STRUT.
2.13. SLIDE VALVE (Shuttle Valve).
2.14. MECHANICAL SEQUENCE VALVE.

CHAPTER. 5.

ILLUSTRATIONS.

FIG.1.	CONTROLS AND INDICATIONS.
FIG.2.	LANDING GEAR HYDRAULIC.
FIG.3.	LANDING GEAR ELECTRICAL.
FIG.4.	NORMAL/EMERGENCY MECHANICAL SELECTOR VALVE (Diagramatic).
FIG.5.	ELECTRO/HYDRAULIC SELECTOR VALVE.
FIG.6.	ELECTRO/HYDRAULIC SELECTOR VALVE.
FIG.7.	RELAY VALVE.
FIG.8.	UNDERCARRIAGE UP LOCK UNIT.
FIG.9.	MAIN U/C DOOR SINGLE AND DOUBLE LOCK UNITS.
FIG.10.	TYPICAL HYDRAULIC MECHANICAL LOCK.
FIG.11.	NOSE U/C JACK GENERAL VIEW.
FIG.12.	NOSE U/C DOOR JACK GENERAL VIEW.
FIG.13.	MAIN U/C OPERATING JACK.
FIG.14.	MAIN U/C DOOR FWD OPERATING JACK.
FIG.15.	MAIN U/C DOOR REAR OPERATING JACK.
FIG.16.	MAIN U/C DOOR REAR OPERATING JACK (Schematic)
FIG.17.	MAIN U/C TELESCOPIC BRACING STRUT.
FIG.18.	SLIDE VALVE.
FIG.19.	MECHANICAL SEQUENCE VALVE GENERAL VIEW.
FIG.20.	MECHANICAL SEQUENCE VALVE FUNCTIONAL. DIAGRAM.

CHAPTER. 5.

1. UNDERCARRIAGE.

1.1. Introduction and Description.

The Jaguar's fully retractable tricycle undercarriage is housed in the fuselage during flight. The doors re-close to partially seal the bays when the undercarriage is down. The hydraulic supply for the operation of the undercarriage and doors during normal operation is from No.1. Hydraulic system, the sequencing being electrical. Emergency operation which consists solely of 'Doors Open' and 'Undercarriage Down' is from No.2. system with mechanical selection and sequencing.

In the event of a No 1 engine failure, and the pilot requiring the undercarriage to be retracted, an hydraulic power transfer system will come into operation automatically.

This circuit is described more fully in the Hydraulic Power Transfer Chapter.

A number of lock units retain the undercarriage and doors in the appropriate position. These units lock mechanically and unlock hydraulically. They also contain integral micro-switches for indication and sequencing.

Sequencing for normal undercarriage is controlled by micro-switches fitted in the legs as well as in the lock units.

1.2. Controls and Indication.

1.2.1. System Selection.

Cockpit selection is achieved by a lever mounted on the Port instrument panel. An interlock circuit operates a latch on the selector which prevents an 'up' selection when the starboard and nose undercarriage oleos are compressed and the nose wheel steering is ENGAGED. This interlock circuit can be overridden by a switch on the selector. The Emergency selector lever is adjacent to the normal selector and is identified by emergency colour coding of 'YELLOW AND BLACK' stripes. The undercarriage doors can also be opened by an outside switch located on the Port side at Frame 20 without effecting the normal undercarriage locking units, this switch is used for ground servicing operations only.

1.2.2. Indicators.

Three Green lamps light when the undercarriage is locked down, and a single Red lamp is illuminated at any time that a leg door is not locked. The filaments of the indicator can be checked by depressing the Test Button situated on the STBD side of the indicator panel.

A lamp fitted in the selector lever handle is initiated by an airspeed switch to provide a flashing warning if the airspeed falls below 200 knots with the undercarriage retracted and both the Port and Starboard Engine R.P.M. below 97% (Max Dry Thrust).

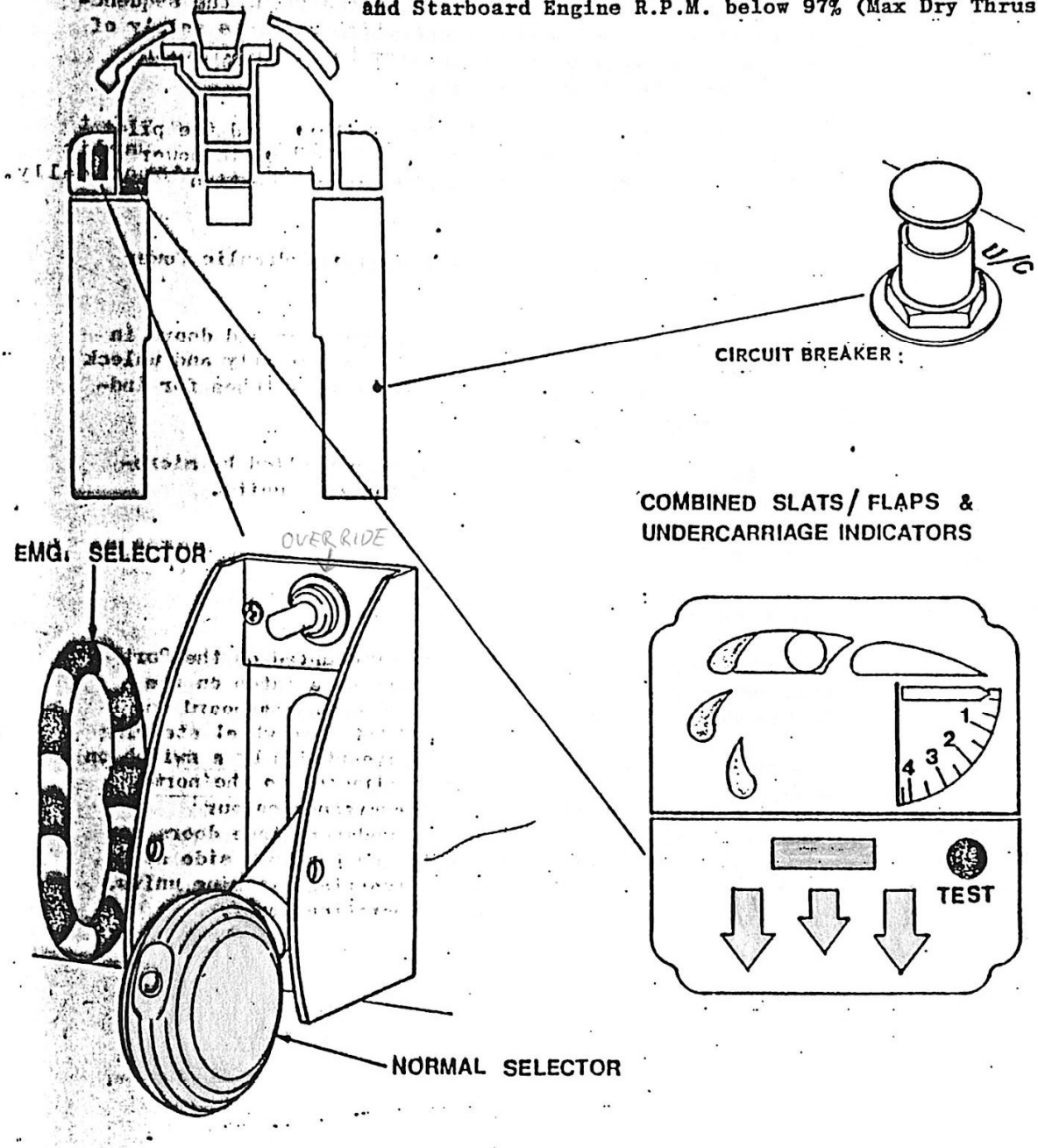

FIG. 1. UNDERCARRIAGE CONTROL & INDICATIONS

1.3. Components within the Circuit.

1.3.1. Component List.

A comprehensive list of hydraulic components fitted into the undercarriage circuit are listed below they consist of:-

Undercarriage Normal/Emergency Selector Valve (Mechanical)

Undercarriage Door Selector Valve (Electro/Hydraulic)

Undercarriage Leg Selector Valve (Electro/Hydraulic).

Nose undercarriage combined operating and locking Jack.

Nose undercarriage door operating and locking Jack.

Nose undercarriage variable Restrictor Valve.

Nose undercarriage Mechanical Sequence Valve.

Nose undercarriage Non-Return Valve.

Nose undercarriage Slide Valves.

Nose undercarriage Leg Up Lock Unit.

Main undercarriage Operating Jack.

Main undercarriage Telescopic Locking Jack.

Main undercarriage Leg Uplock Unit.

Main undercarriage Door Operating Jacks of which:-

Fwd Combined Operating and Locking Jack.

Rear Extend Ram Type Jack.

Main undercarriage Single Type Door CLOSED Units.

Main undercarriage Double Type Door CLOSED Units.

Main undercarriage Slide Valves.

Main undercarriage Relay Valves.

Main undercarriage Variable Restrictor Valves.

Main undercarriage Two-way Restrictor Valves.

Main undercarriage Mechanical Sequence Valves.

Main undercarriage Non-Return Valves.

1.4. Operation.

1.4.1. Indicator Light Sequencing.

The indicator light sequencing for the main and nose undercarriage are as follows:-

Undercarriage Locked Down with all undercarriage doors LOCKED CLOSED.

3 GREEN LIGHTS ILLUMINATED.

Undercarriage Locked DOWN with any one of the undercarriage doors NOT LOCKED CLOSED.

3 GREEN LIGHTS and RED STRIP LIGHT ILLUMINATED.

Undercarriage Doors OPEN with the nose and main undercarriage locking units UNLOCKED.

RED STRIP LIGHT ILLUMINATED.

Undercarriage LOCKED UP and Undercarriage Doors CLOSED ALL LIGHTS OUT.

1.4.2. Undercarriage Leg and Door Sequencing.

Undercarriage Retraction (Normal).

Nose U/C door operating jack UNLOCKS & RETRACTS.

Nose U/C Leg operating jack UNLOCKS & EXTENDS.

Main U/C door UP LOCK UNITS - UNLOCK.

Main U/C door operating Jacks (2 off).

FWD - RETRACTS & LOCKS IN RETRACTED POSITION.

REAR- EXTENDS.

Telescopic Locking Strut UNLOCKS.

Main U/C operating jack EXTENDS.

When all three U/C leg jacks extend fully to retract the undercarriage legs and lock in the retracted position electrical sequencing will enable the reverse operation of the doors - moving the:-

Nose U/C door jack to EXTEND and LOCK.

Main U/C FWD door jack to UNLOCK and EXTEND.

REAR - - RETRACT.

Main door UP lock units will engage with rollers attached to the doors and LOCK in the CLOSED position.

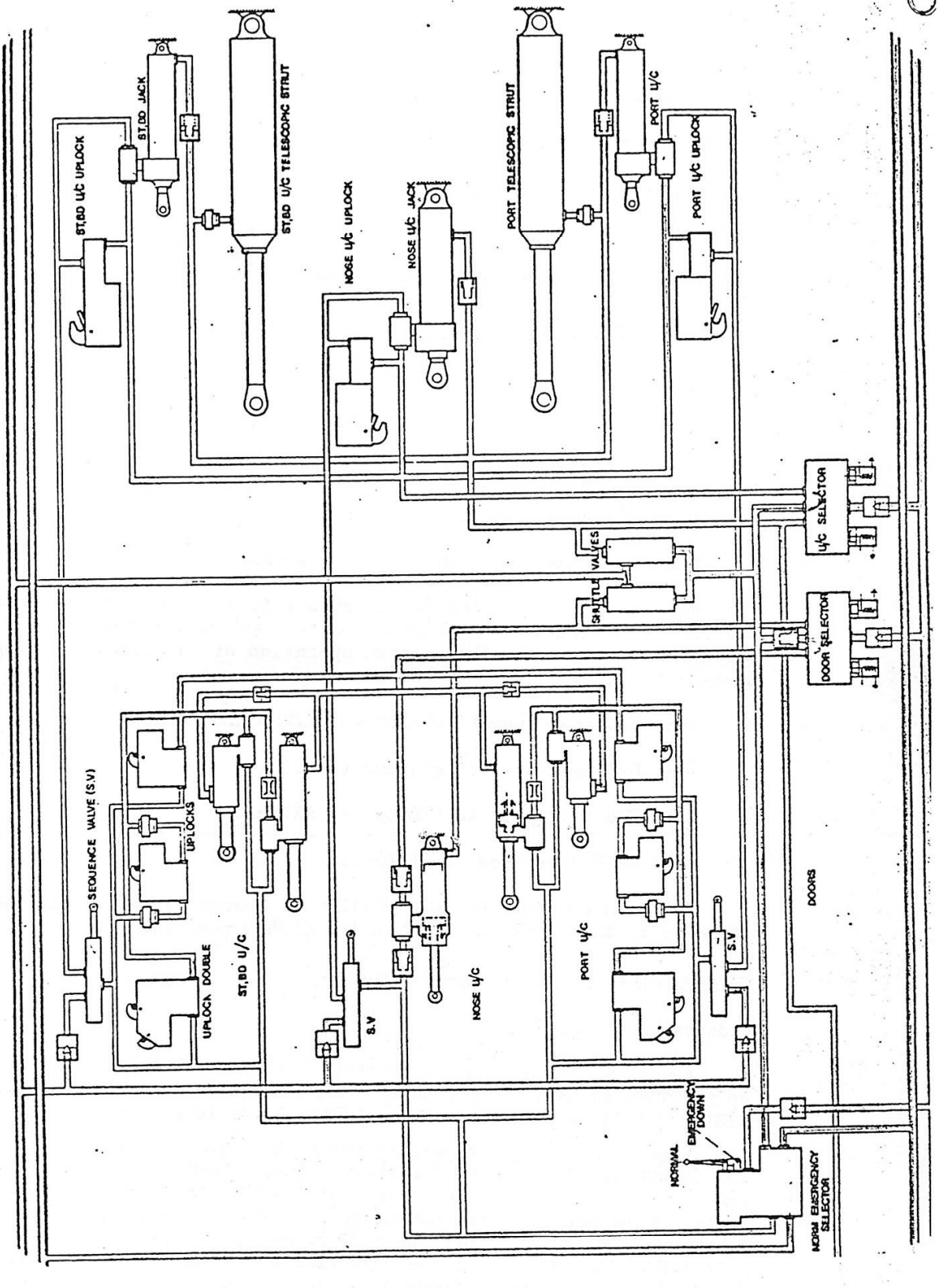

FIG. 2. LANDING GEAR (HYDRAULICS)

1.4.2. (contd).

Undercarriage DOWN (Normal).

Nose U/C door operating jack UNLOCKS & RETRACTS.

Nose U/C UP lock unit UNLOCKS.

Nose U/C Leg operating jack RETRACTS & LOCKS.

Main U/C door UP LOCK UNITS - UNLOCK.

Main U/C door operating jacks (2 off):-

FWD RETRACTS and Locks in the RETRACTED POSITION.

REAR - EXTENDS.

Main U/C UP LOCK UNIT - UNLOCKS.

Main U/C operating Jacks - RETRACT.

Telescopic locking strut EXTEND & LOCKS.

When all three U/C leg jacks retract fully to extend the undercarriage legs become LOCKED in the Down position electrical sequencing will enable the reverse operation of the doors - moving the:-

Nose U/C door operating jack to EXTEND and LOCK.

Main U/C door operating jacks (2 off):-

FWD door jack to UNLOCK and EXTEND.

REAR door jack to RETRACT.

The main U/C door UP LOCK UNITS will engage with the rollers attached to the doors and lock in the CLOSED position.

1.4.3. Undercarriage Electrical Sequencing.

Undercarriage UP.

Power supply must be through both COMPRESSION MICRO SWITCHES on the NOSE and STARBOARD MAIN U/C LEGS, and the NOSE WHEEL STEERING MASTER SWITCH to enable the U/C selector lever to be moved.

Electrical supply to operate the DOOR SELECTOR VALVE will be via the EMERGENCY ISOLATION MASTER SWITCH, GROUND DOORS OPEN MICRO SWITCH and any one of the LEG UP MICRO SWITCHES to the door selector valve. Its earth return being via the GROUND DOORS OPEN MICRO SWITCH, U/C SELECTOR SWITCH, and either the PORT or STARBOARD U/C fairing DOOR CLOSED MICRO SWITCHES. At the same time electrical power will be available to the nose U/C DOOR OPEN MICRO SWITCH, but there will be no supply through it to the U/C LEG SELECTOR VALVE until the NOSE DOORS have OPENED.

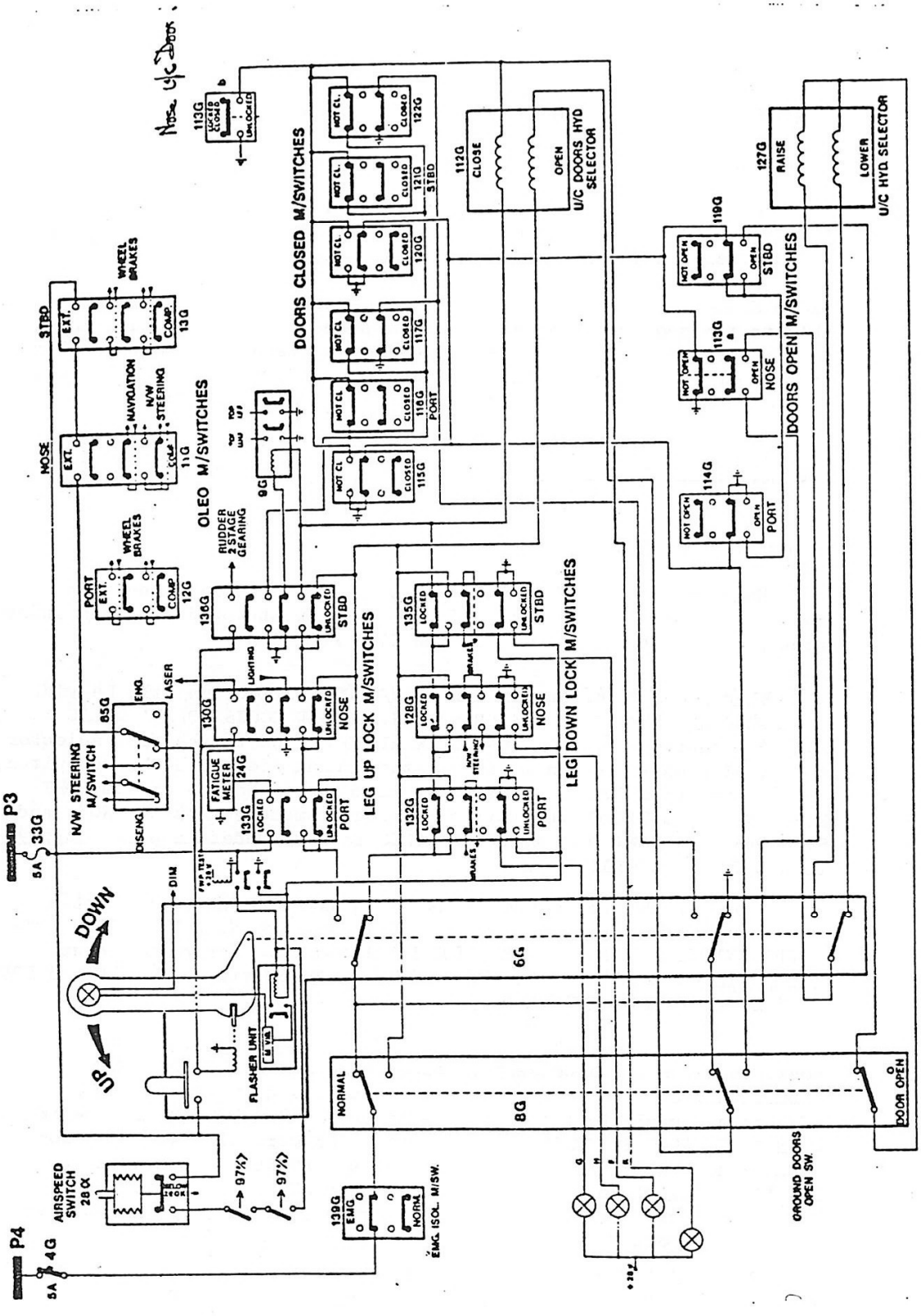

FIG.3 LANDING GEAR ELECTRICS

1.4.3. (contd).

When the U/C doors are in the fully LOCKED OPEN position the power supply to the U/C Selector will be via the NOSE U/C DOORS OPEN MICRO SWITCH and the U/C SELECTOR LEVER SWITCH. Its earth return being via the GROUND DOORS OPEN SELECTOR SWITCH the STARBOARD and PORT 'DOORS OPEN' MICRO SWITCHES.

As the Main and Nose U/C's retract and Lock in the retracted position it is now necessary to change the DOOR SELECTOR VALVE SELECTION from OPEN to CLOSE. This is achieved by breaking the electrical supply to the OPEN side of the DOOR SELECTOR, by the LEG UP MICRO SWITCHES changing over. Electrical power will now be made available to the door selector valve CLOSED side through the LEG UP LOCK MICRO SWITCHES. (PORT, NOSE & STARBOARD) to the door selector. Its earth return being via either the Nose, Starboard or Port DOOR CLOSED MICRO SWITCHES or the STARBOARD U/C LEG UP LOCK MICRO SWITCH.

Once all the U/C doors are closed the earth return from the U/C DOOR SELECTOR VALVE is broken by the doors CLOSED MICRO/SWITCHES changing over.

Undercarriage DOWN.

Movement of the U/C selection lever to DOWN will reposition contacts within the selector switch and allow the spring loaded interruptor pin to lock the lever in the DOWN POSITION.

Electrical Power supply for an U/C DOWN selection will be via the EMERGENCY ISOLATION MASTER SWITCH, GROUND DOORS 'OPEN' MICRO SWITCH, and the PORT LEG 'DOWN LOCK MICRO SWITCH to the door selector valve. Its earth return being via the Ground Doors Open Micro Switch, and U/C Selector Switch. If a fault in contacts occurs in the PORT LEG DOWN MICRO SWITCH contacts provision is made within the NOSE and STARBOARD LEG DOWN LOCK MICRO SWITCHES to accommodate a power supply to U/C DOOR SELECTOR VALVE.

When the U/C doors are in the fully LOCKED OPEN position the power supply to the U/C SELECTOR will be via the NOSE U/C DOORS OPEN MICRO SWITCH and the U/C SELECTOR LEVER SWITCH. Its earth return being via the GROUND DOORS OPEN SELECTOR SWITCH the STARBOARD and PORT 'DOORS OPEN' MICRO SWITCHES.

As the Main and Nose U/C's extend and LOCK in the extended position it is now necessary to change the DOOR SELECTOR VALVE SELECTION from OPEN to CLOSE. This is achieved by breaking the electrical supply to the OPEN side of the DOOR SELECTOR, by the LEG DOWN LOCK MICRO SWITCHES changing over. Electrical power will now be made available to the door selector valve CLOSED side through the LEG DOWN LOCK MICRO SWITCHES (PORT, NOSE & STARBOARD) to the door selector. Its earth return being via either the Nose, Starboard or Port DOOR CLOSED MICRO SWITCHES.

Once all U/C doors, are closed the earth return from the U/C DOOR SELECTOR VALVE is broken by the doors CLOSED MICRO/SWITCHES changing over.

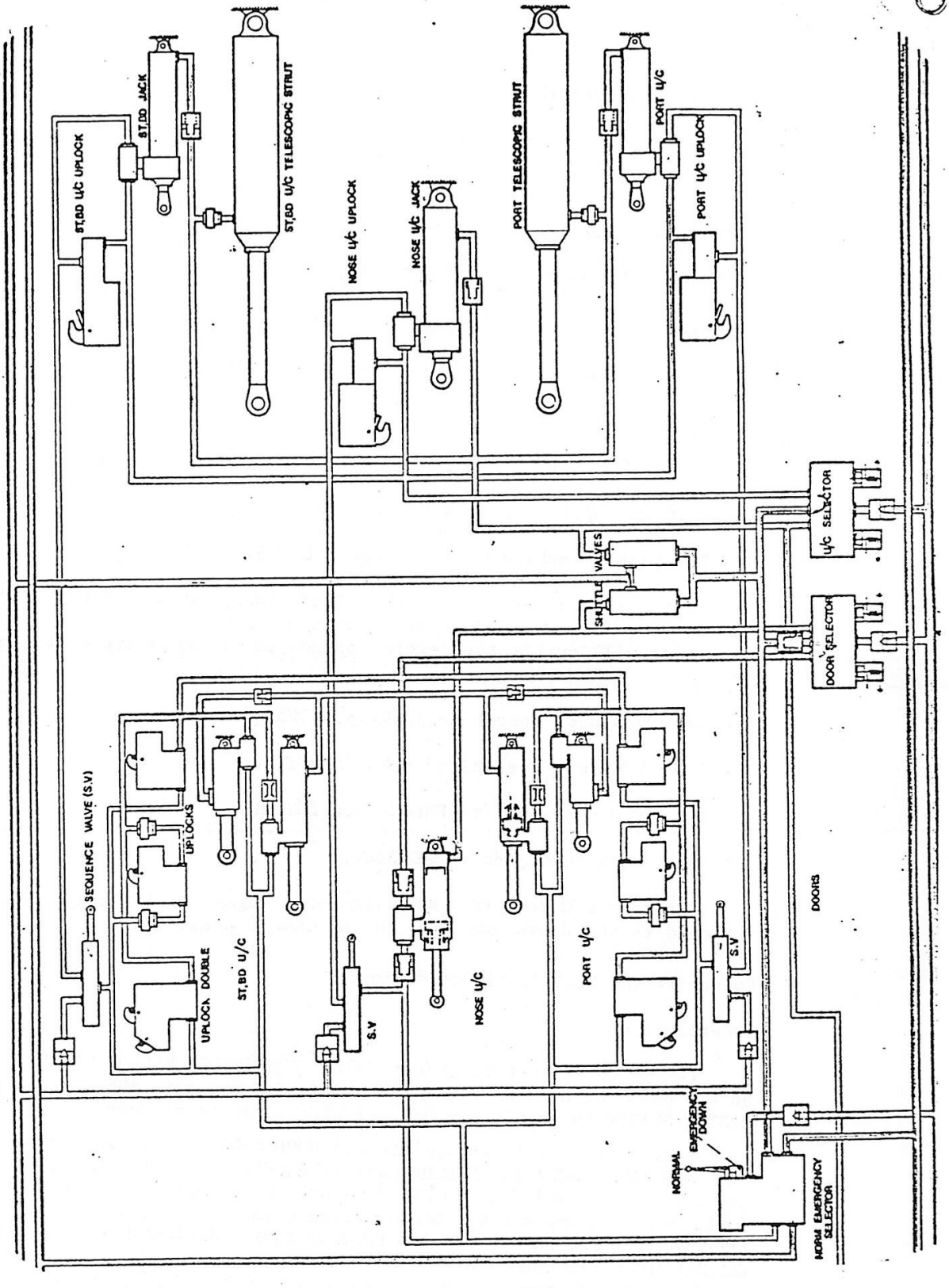

FIG. 2. LANDING GEAR (HYDRAULICS)

1.4.2. (contd).

Undercarriage DOWN (Normal).

Nose U/C door operating jack UNLOCKS & RETRACTS.

Nose U/C UP lock unit UNLOCKS.

Nose U/C Leg operating jack RETRACTS & LOCKS.

Main U/C door UP LOCK UNITS - UNLOCK.

Main U/C door operating jacks (2 off):-

FWD RETRACTS and Locks in the RETRACTED POSITION.

REAR - EXTENDS.

Main U/C UP LOCK UNIT - UNLOCKS.

Main U/C operating Jacks - RETRACT.

Telescopic locking strut EXTEND & LOCKS.

When all three U/C leg jacks retract fully to extend the undercarriage legs become LOCKED in the Down position electrical sequencing will enable the reverse operation of the doors - moving the:-

Nose U/C door operating jack to EXTEND and LOCK.

Main U/C door operating jacks (2 off):-

FWD door jack to UNLOCK and EXTEND.

REAR door jack to RETRACT.

The main U/C door UP LOCK UNITS will engage with the rollers attached to the doors and lock in the CLOSED position.

1.4.3. Undercarriage Electrical Sequencing.

Undercarriage UP.

Power supply must be through both COMPRESSION MICRO SWITCHES on the NOSE and STARBOARD MAIN U/C LEGS, and the NOSE WHEEL STEERING MASTER SWITCH to enable the U/C selector lever to be moved.

Electrical supply to operate the DOOR SELECTOR VALVE will be via the EMERGENCY ISOLATION MASTER SWITCH, GROUND DOORS OPEN MICRO SWITCH and any one of the LEG UP MICRO SWITCHES to the door selector valve. Its earth return being via the GROUND DOORS OPEN MICRO SWITCH, U/C SELECTOR SWITCH, and either the PORT or STARBOARD U/C fairing DOOR CLOSED MICRO SWITCHES. At the same time electrical power will be available to the nose U/C DOOR OPEN MICRO SWITCH, but there will be no supply through it to the U/C LEG SELECTOR VALVE until the NOSE DOORS have OPENED.

1.4.3. (contd).

N.B.

Whenever a selection of U/C UP or DOWN has be completed both electro-hydraulic selector valves will become de-energised and revert back to its centre locked or neutral position, relieving hydraulic pressure from both sides of all operating jacks back to system low pressure return.

1.4.4. Emergency Operation. (DOWN ONLY).

The emergency operation of the undercarriage circuit will be used only if an hydraulic failure of No.1. system, or an electrical failure has occurred in either the power or system circuit. Emergency operation is purely MECHANICAL and is not reliant on any electrical sequencing or selection.

Hydraulic Sequence.

On pulling the Emergency U/C Selector handle hydraulic pressure from No.2. hydraulic system will be directed via the Normal/Emergency U/C Selector Valve, at the same time isolating any possibility of electrical supply by operating the Emergency Isolation Micro Switch, into the emergency DOWN lines of the U/C. Fluid will now pass to shuttle valves on:-

Main U/C DOOR LOCK UNITS - unlocking all six doors.

Nose U/C LOCKING JACKS - unlocking and retracting the door operating Jack.

Main U/C Operating Jack FWD AND REAR - Retracting & Extending.

Pressure will also be felt at, but not through, the two main and one nose leg mechanically operated sequence valves. As the U/C doors OPEN fluid pressure will be directed through the sequence valve to its own U/C leg circuit up lock and operating Jack shuttle valves which move over to allow hydraulic pressure to unlock the U/C Up Lock Units and retract all three U/C retraction Jacks. Return fluid from the circuit being fed back to No.2. Hydraulic System low pressure return via two OPEN Shuttle Valves.

RELAY

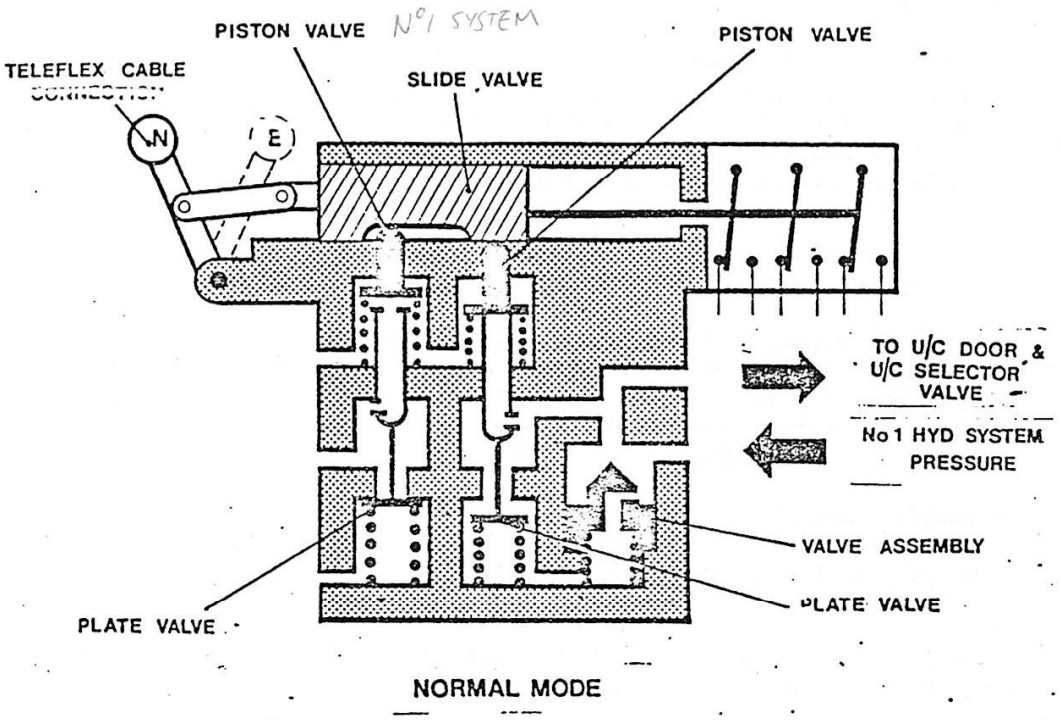

NORMAL MODE

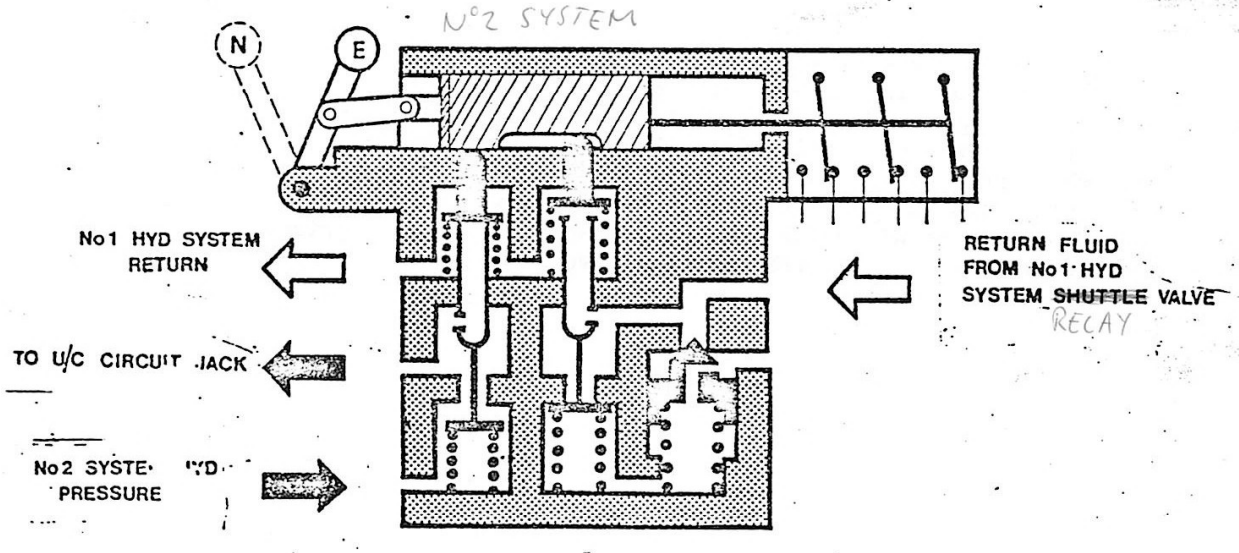

EMERGENCY MODE

FIG. 4. NORMAL EMERGENCY MECHANICAL SELECTOR VALVE (DIAGRAMATIC)

2. SYSTEM COMPONENTS.

2.1. Normal/Emergency Mechanical Selector Valve.

2.1.1. Introduction.

This selector, which is mechanically remote controlled, is installed in a undercarriage control electro-hydraulic system.

It features two stable positions which respectively ensure fluid supply of the service units through the normal or the emergency hydraulic system.

Three micro switches incorporated in the unit control the electrical circuits according to the position of the control lever.

2.1.2. Description.

The emergency selector valve consists of a body with five fluid connections. Two ports being used in its NORMAL MODE and three when operated in EMERGENCY. The assembly consists of two plate valves, selected by a sliding block, its action moving piston valves to depressed or released valve units. A third servo assisted inlet conical seat valve is installed on the emergency side of the selector valve.

2.1.3 Operation. (FIG 4).

NORMAL:

With the U/C Normal/Emergency selector lever slide valve depressing No.1 piston valve and opening the plate valve, fluid pressure from No.1. HYD. System can pass from the bottom connection through the centre of the conical valve plunger to the U/C circuit to both the U/C and U/C door selector valves. At the same time fluid pressure acting on the greater surface area of the conical valve plunger will fully OPEN the valve - allowing full fluid flow into the undercarriage circuit.

EMERGENCY:

With the selector lever operated to give an emergency selection, the internal valves as previously stated will be reversed. No.1 piston valve will be released and OPEN with its plate valve CLOSED and No.2 piston valve will be depressed and CLOSED with its plate valve OPEN, fluid pressure from No.2 HYD. system will now pass through the OPEN plate valve into the U/C emergency lines.

Return fluid from an emergency selection will pass from the system relay valves through the OPEN piston valve into No.1 2 system low pressure return.

2.2. Electro/Hydraulic Selector.

2,2,1. Introduction.

This selector is electrically operated to direct fluid to either of two services and to simultaneously open the return line from the other service. The main flow of fluid is controlled by a bobbin type valve operated by the fluid directed, as required, by two pilot valves each operated by a solenoid. When both solenoids are de-energised, the bobbin is in the central position so that supply fluid to the services is cut-off, but return fluid from the services is able to flow to the return connection.

2.2.2. Description.

The body of this unit houses a bobbin valve assembly and two identical pilot valves each connected by fluid ways to pipe adaptors which provide for connection purposes.

The bobbin valve assembly consists of a sealed liner in which the bobbin operates to direct fluid through drillings in the liner to the selected connection ports. The bobbin valve is moved by two sealed opposing actuating pistons, positioned one at each end of the bobbin and each housed within a centralising piston. The centralising pistons each operate in the sealed bore of an end fitting which is screwed in to secure the liner in a centralised position. Each centralising piston is loaded at its outer end by a spring interposed between the centralising piston and a spring guide in the end fitting.

Each pilot valve assembly comprises of a spring, filter, two sealed valve seats and a spacer, shimmed for fitted spring length and ball movement. A push rod locates through the spacer and the outer valve seat to contact a ball valve which operates between the two valve seats. Centrally surmounting each pilot valve assembly is a solenoid, retained by four cap screws, with its screw abutting a spring loaded rod which it depresses to contact the pilot valve push rod and actuate the pilot valve when energised. The armature screw provides for adjustment and is surmounted by a sealed cap, while a plug carrying the electrical supply from the aircraft to the unit.

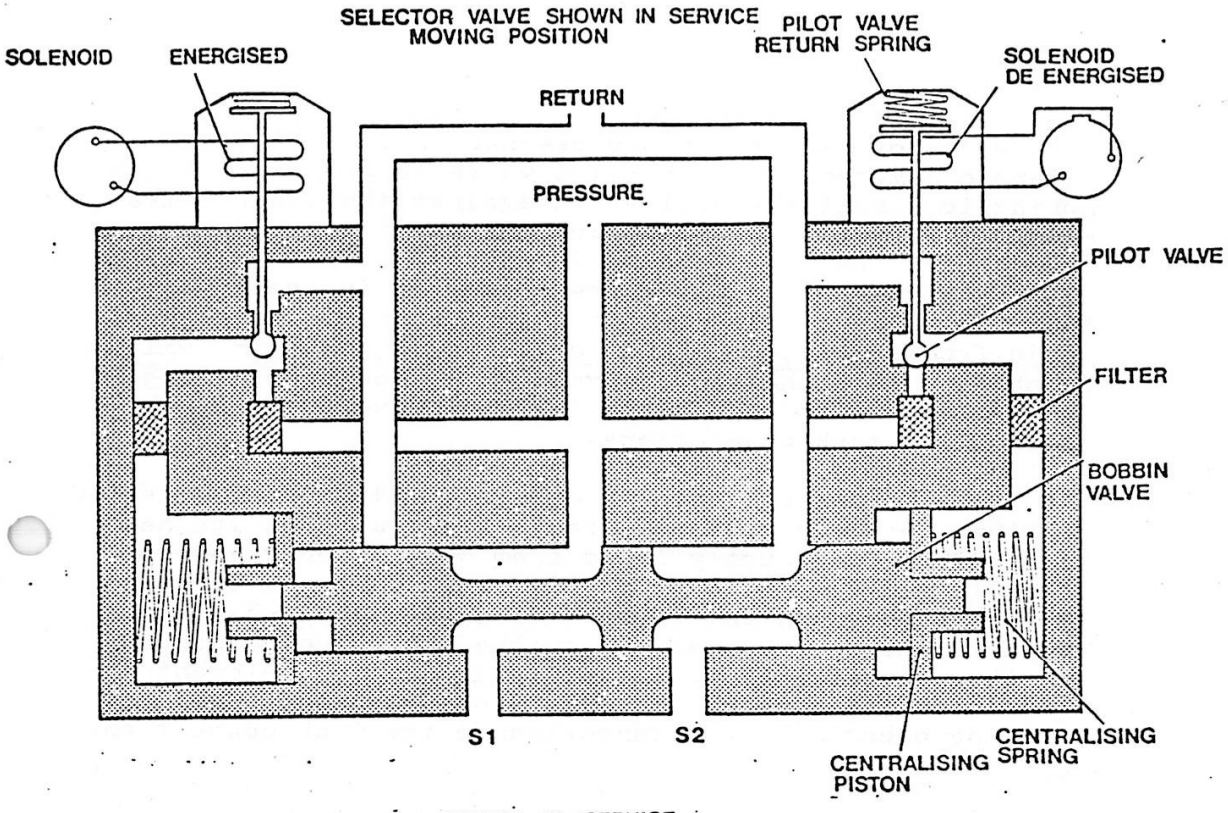

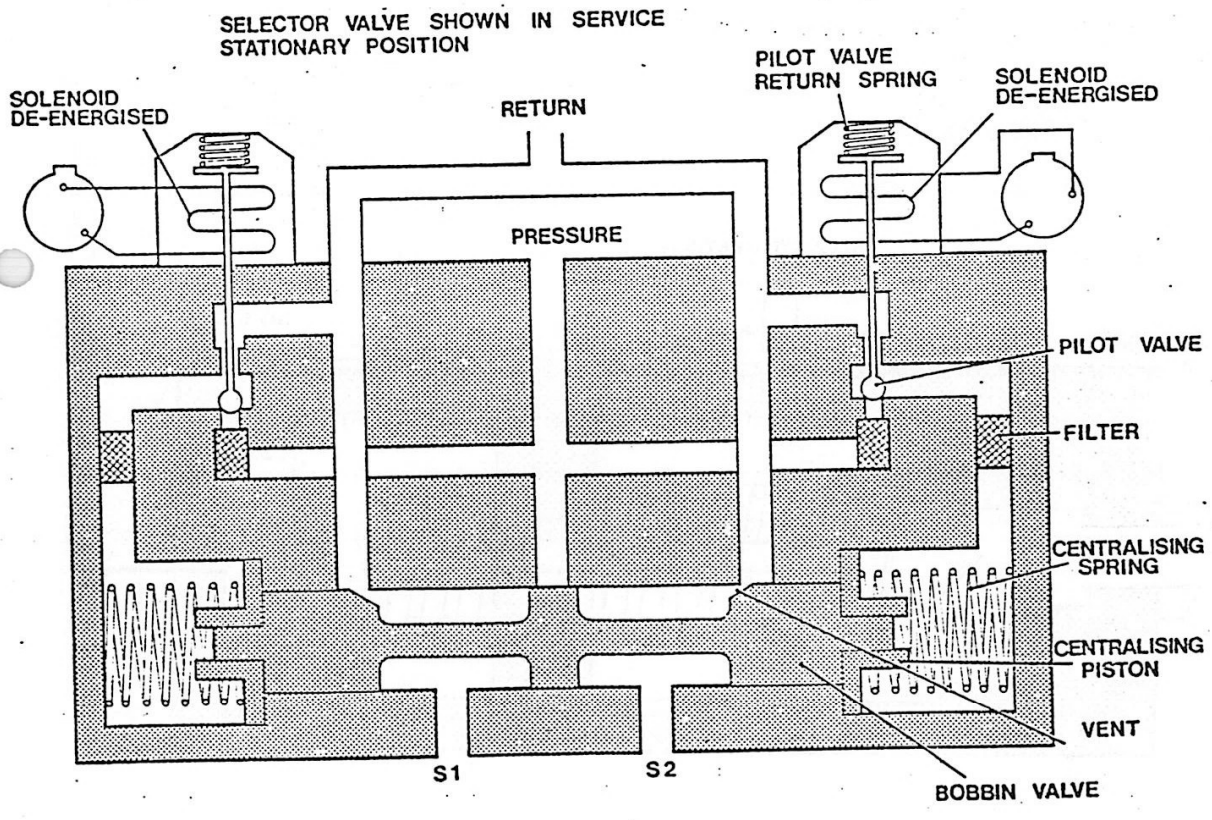

FIG. 5. & 6. ELECTRO HYDRAULIC SELECTOR VALVE

2.2.3. Operation.

When both solenoids are de-energised FIG 6., the solenoid armature in each pilot valve is extended by its spring to thrust the ball valve against the inner valve seat. Supply fluid is thus cut off and the spring at each end of the liner centralises the bobbin the central flange of which closes the pressure port in the liner, thus preventing fluid flow through the unit. Return fluid from service connections S1 and S2, however, will be able to pass through the vent in the adjacent flanges of the bobbin and return via the fluid ducts in the body to the tank connections.

When either solenoid is energised FIG 5, the solenoid armature retaining the applicable valve against its seat is withdrawn and supply fluid from connection P unseats the ball valve and flows via the fluid ducts in the body to the appropriate end of the bobbin assembly where axial movement of the bobbin in the pre-selected direction then permits the passage of fluid to the relevant service connection and the return of displaced fluid from the other service connection to the tank connection.

2.3. Relay Valve.

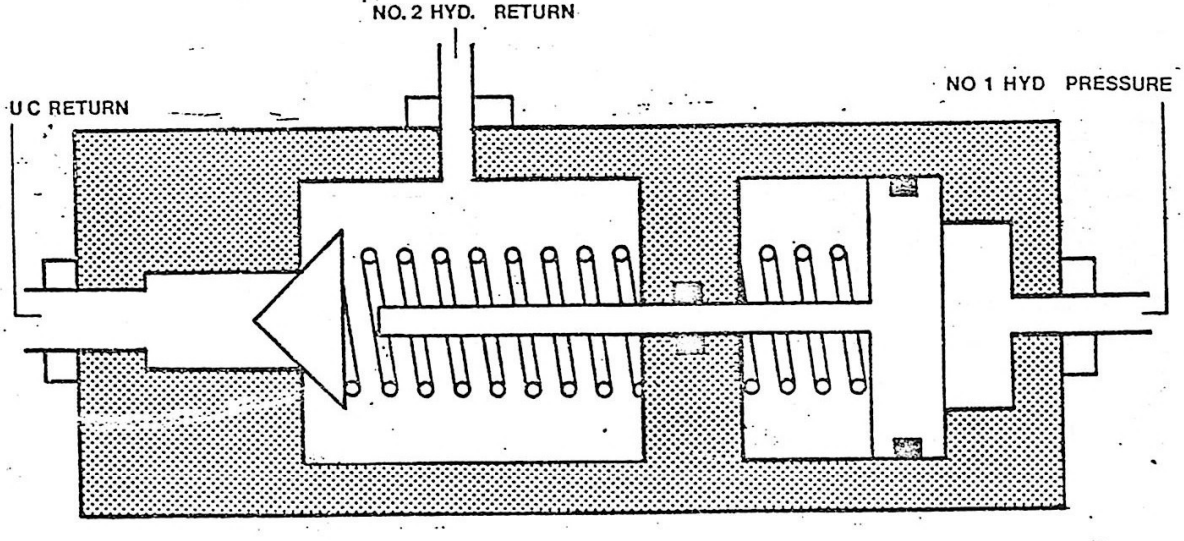

FIG. 7. RELAY VALVE

2.3.1. General Description & Operation.

The hydraulically operated relay valve installed in No.1. Hydraulic System is kept CLOSED whenever system pressure is applied it is also assisted by internal springs. Its purpose is to supply a return passage for fluid in an emergency configuration from the undercarriage up lines back to No.2. hydraulic system low pressure return.

The valve consists of a body incorporating three parts - two connected into No.1. hydraulic system and one to No.2 system. Internally a non-return valve is kept onto its seat by an operating spring, with an operating piston kept out of contact with the N.R.V. by a second spring.

When ever No.1 system hydraulic pressure is available the valve will be CLOSED - if system pressure should fail its N.R.V. will still remain CLOSED by internal spring action. The N.R.V. will only open when return fluid passing back to return exceed the spring pressure acting upon the N.R.V. conical ball valve, with no hydraulic pressure acting on the operating piston.

2.4. Electro-Hydraulic Lock Units.

2.4.1. General Description & Operation (FIG 8).

The lock units for legs and doors are similar in construction. Locking action is achieved by a self-locking snap-action hook, which engages on the stirrup fitting of the door or leg. Two hydraulic plungers are fitted to release the locks, and supplied from No.1. hydraulic system, via the normal undercarriage down line, the other from No.2 hydraulic system during an emergency lowering sequence.

A removable switch sub-assembly contains three Petereen micro-switches. The switches are activated by a cranked lever integral with the main body of the lock and the switch sub-assembly can be replaced without removing the main unit or disturbing the hydraulic supplies. In-situ adjustment of the switch assembly should not be necessary, all setting-up being done in the servicing bay.

2.5. Variable & Two way Restrictor Valves.

These valves are similar to those previously described in Chapter 1 with the main difference being restrictor orifice size.

2.6. Non-Return Valve.

Information regarding this valve is anotated in Chapter 1.

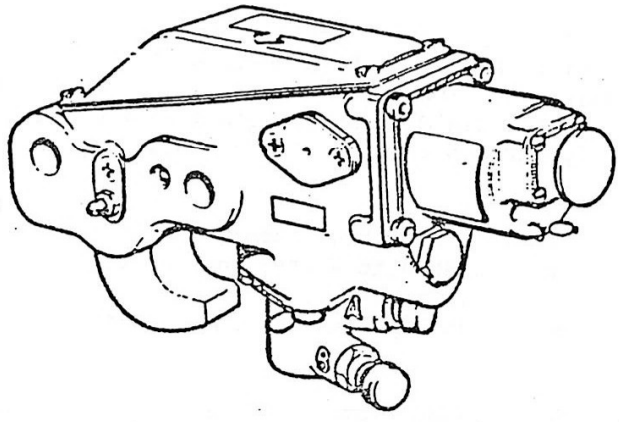

FIG. 8. UNDERCARRIAGE UP LOCK UNIT

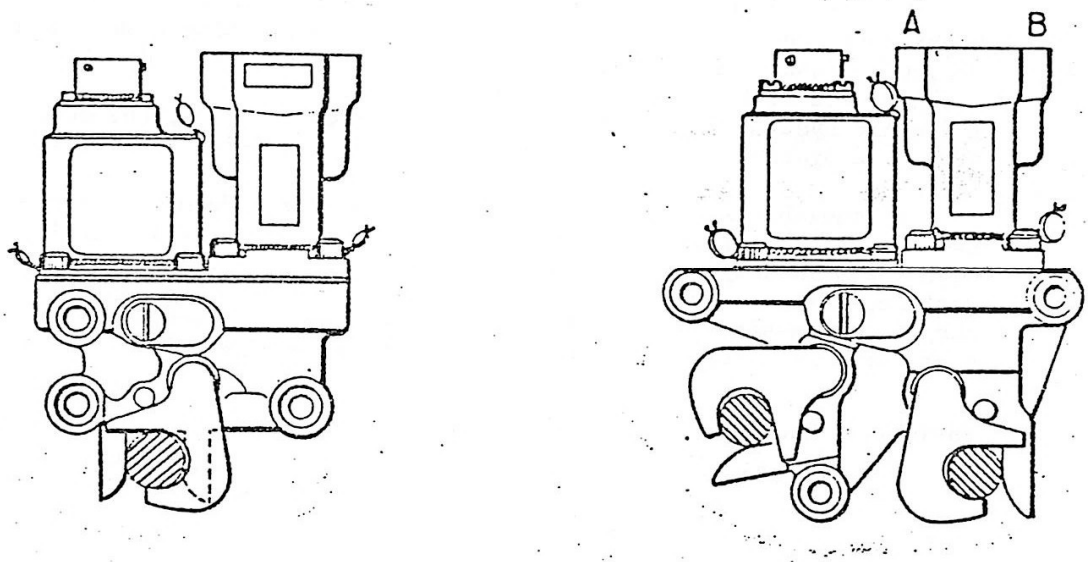

FIG. 9. MAIN U/C DOOR SINGLE & DOUBLE LOCK UNITS

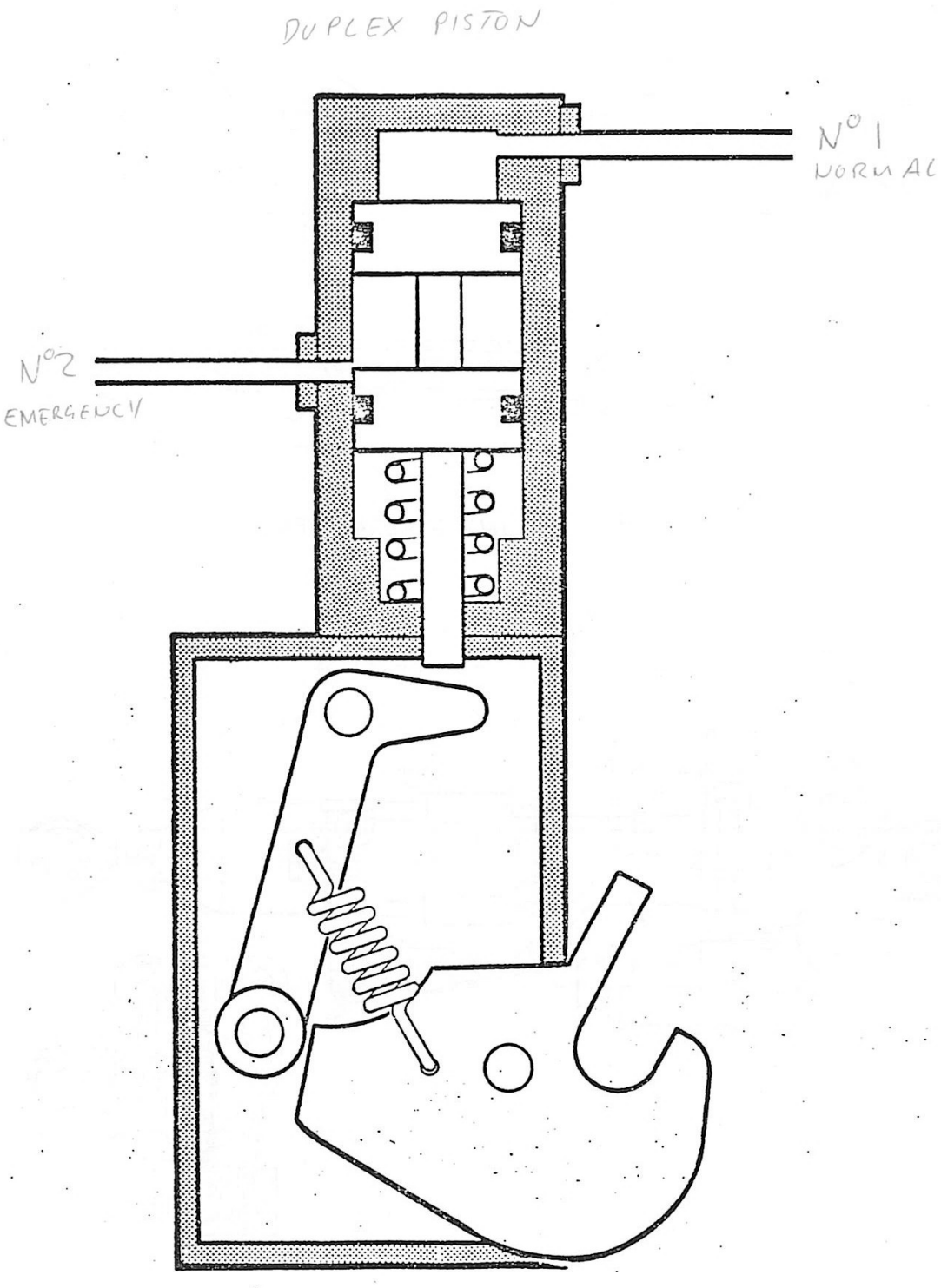

FIG. 10. TYPICAL HYDRAULIC MECHANICAL LOCK

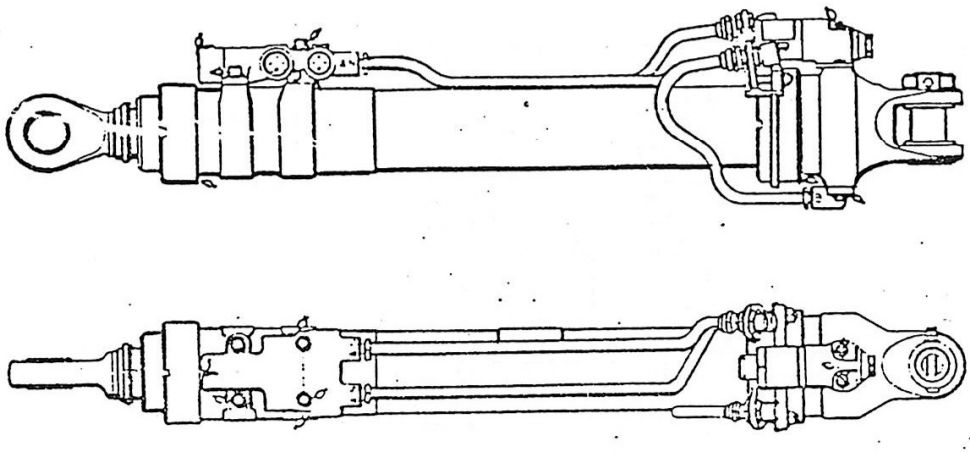

FIG. 11. NOSE U/C JACK GENERAL VIEW

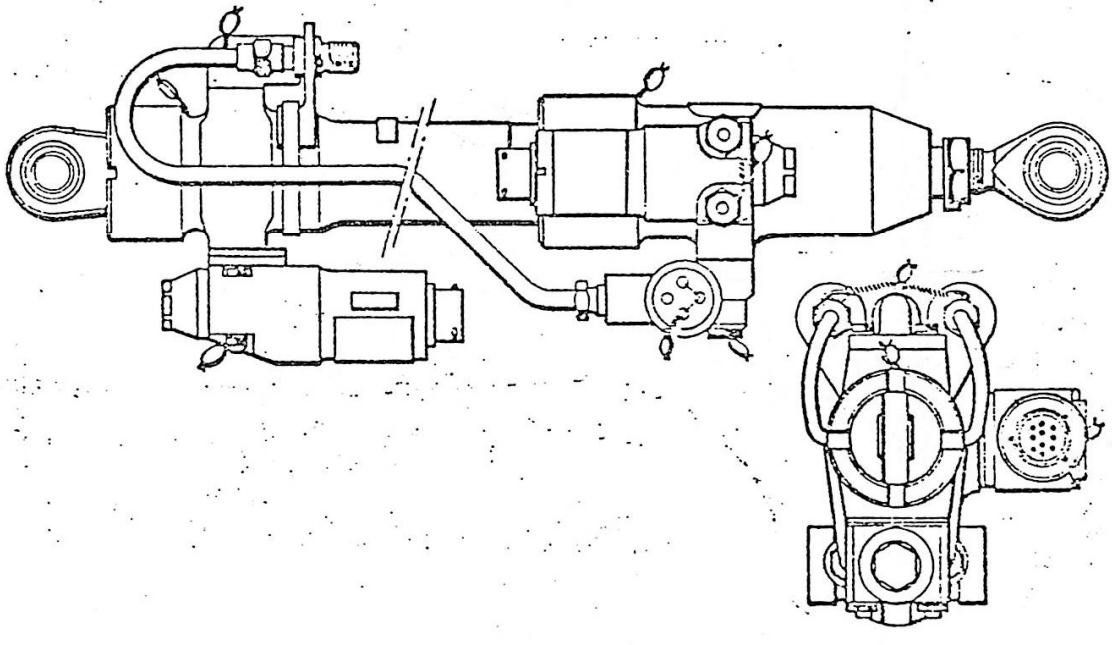

FIG. 12. NOSE U/C DOOR JACK GENERAL VIEW

2.7. Nose U/C Operating Jack.

2.7.1. General Description & Operation.

The nose undercarriage operating jack is of the double acting type with internal mechanical locking for a 'retracted' ram position. It is fitted with a Switching Unit controlling the nose wheel steering system. Secured to the cylinderical body of the jack is a slide valve and flow reducing assembly. This assembly ensures piston ram retraction by two independent hydraulic systems and reduction of the piston ram displacement rate at the end of the 'RAM EXTENSION' travel.

2.8. Nose U/C Door Operating Jack.

2.8.1. General Description and Operation.

The nose undercarriage door operating jack is similar to the nose undercarriage operating jack, but with its mechanical locking device operated in the 'extend' ram position. It is not connected electrically with the nose wheel steering circuit, or have slowing up facilities at its extremities.

2.9. Main U/C Operating Jack.

2.9.1. General Description and Operation.

This operating jack is of the double acting type, and it does not feature any internal locking mechanism. The piston is fitted with a spring type damper in order to absorb possible pressure fluctuations during the ram extension sequence. A valve box, containing a slide valve, controls the fluid inlet to enable piston ram extension and retraction it also allows the connection of two independent hydraulic systems to be used. An internal flow reduction device ensures that fluid displacement rate is reduced at its end of ram extension travel.

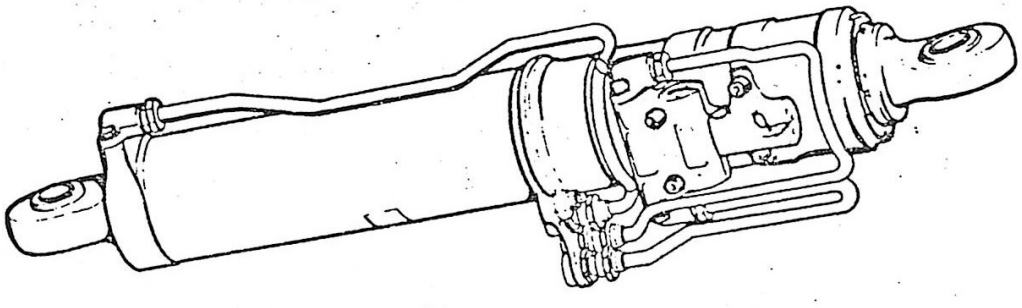

FIG. 13. MAIN U/C OPERATING JACK

2.10. Main U/C Door FWD Operating Jack.

2.10.1. General Description & Operation.

The main undercarriage door FWD operating jack is of the double acting type with an internal mechanical locking device for the RETRACTED position of the piston ram. The cylinder is also fitted with a slide valve allowing the use of two independent hydraulic supplies for jack ram retraction. The operating jacks ensure operation of the main undercarriage to the OPEN and LOCKED Position.

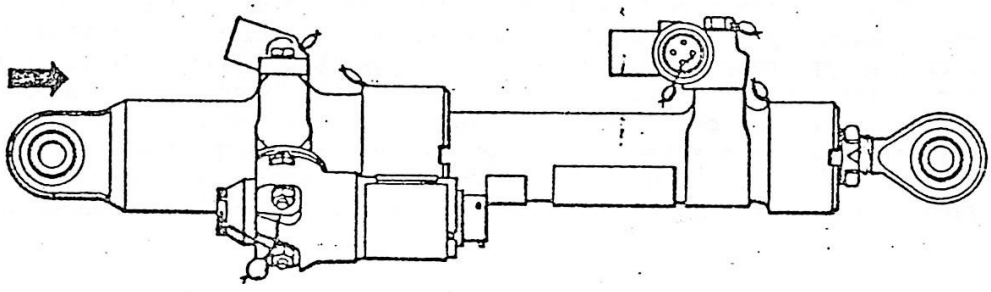

FIG. 14. MAIN U/C DOOR FWD. OPERATING JACK

2.11. Main U/C Door REAR Operating Jack.

2.11.1. General Description & Operation.

The rear main undercarriage operating Jack is hydraulically controlled and of the double acting type. Each Jack is fitted with a slide valve assembly allowing the use of two independent hydraulic supplies to enable the jack to be EXTENDED in the event of an emergency. The Jack is of the extend ram type giving the impression that the jack is always in the extended position, with a hollow piston and ram.

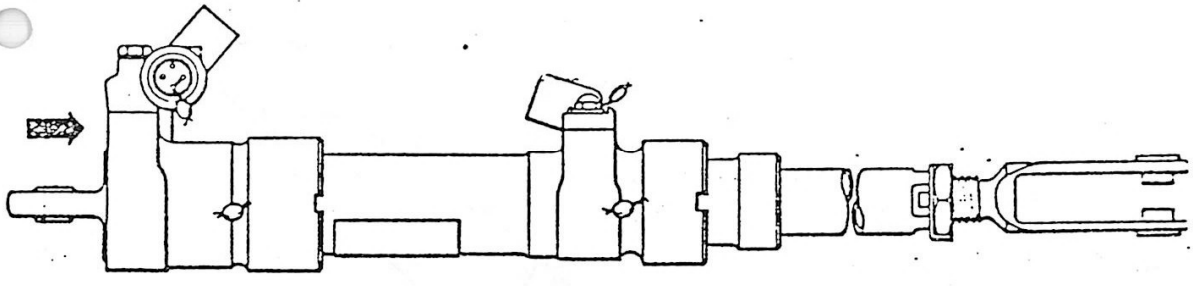

FIG. 15. MAIN U C DOOR REAR OPERATING JACK

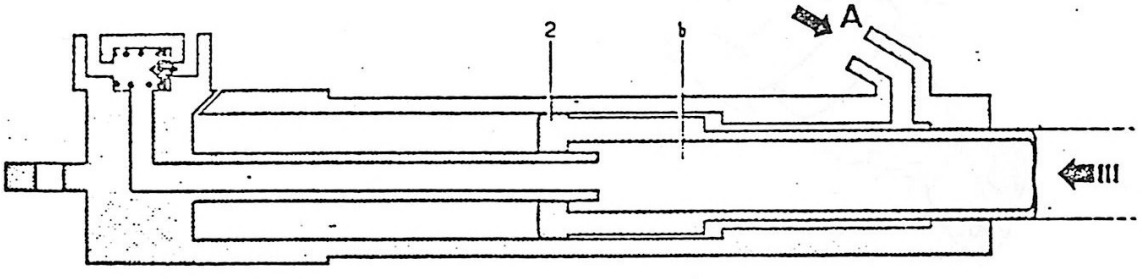

FIG. 16. MAIN U/C DOOR REAR OPERATING JACK (SCHEMATIC)

2.12. Main U/C Telescopic Bracing Strut.

2.12.1. General Description & Operation.

The telescopic brace strut is attached at one end to the structure, and at the other end to the undercarriage leg of which it ensures the bracing and the mechanical locking in the EXTENDED position. It is unlocked hydraulically.

The telescopic brace strut is not an actuating element; the displacement of the rod is controlled by the undercarriage leg.

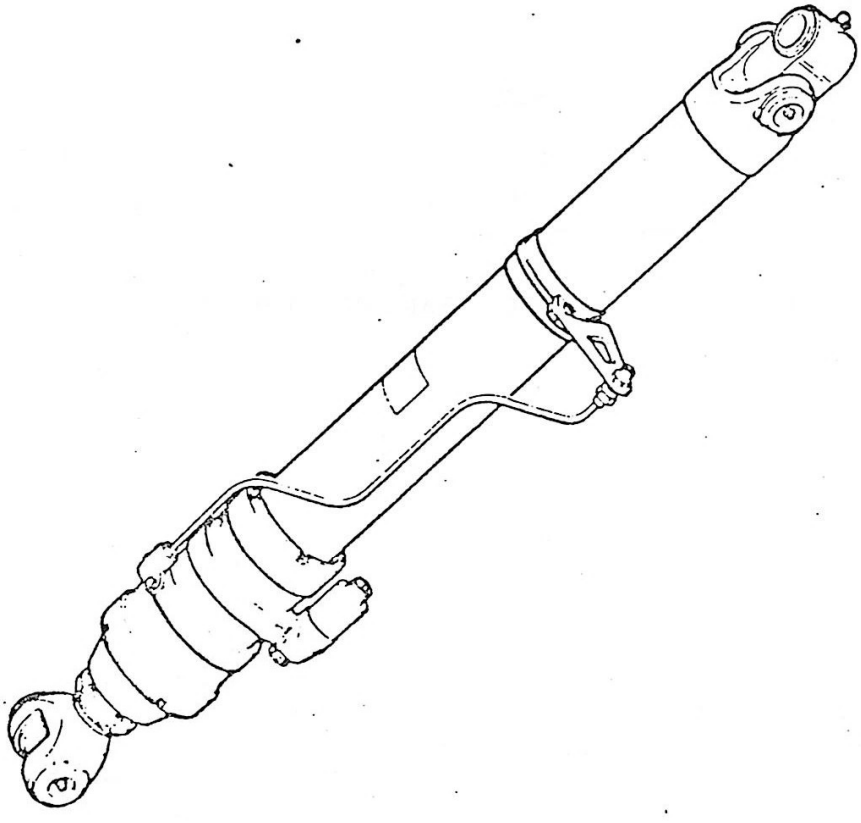

FIG. 17. MAIN U/C TELESCOPIC BRACING STRUT

2.13. Slide Valve.

2.13.1. General Description.

This type of slide valve is fitted to all undercarriage operating Jacks and units that require an independent system to operate a component, in the event of an hydraulic pressure or electrical failure. It allows the use of two hydraulic supplies to be directed to the same sense of the operating Jack or unit, by means of a change over slide within the body of the unit, without any risk of interference between the two different sources of supply.

The casting of the valve has two ports anotated N & S indicating NORMAL and EMERGENCY which are connected to No.1 and No.2. hydraulic power systems.

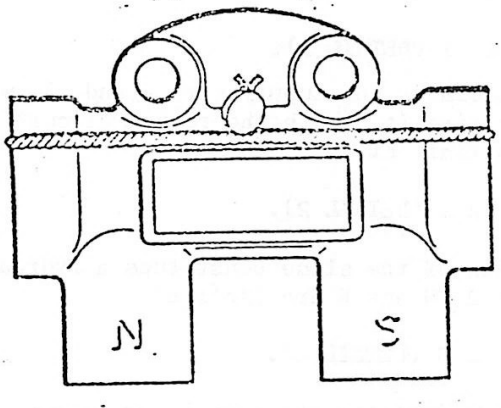

FIG. 18. SLIDE VALVE

2.14. Mechanical Sequence Valve.

2.14.1. General Description.

The Mechanical Sequence Valve (Single Acting Distributor) is of the slide valve type. It is operated by a moving component to direct fluid into a system circuit in a set sequence.

This unit is mechanically connected to the undercarriage door. At the end of the latter's opening sequence and when using the emergency hydraulic system, it permits the pressurization of the unlocking and extension system of the corresponding undercarriage.

The unit consists of a body attached to the airframe structure with a liner in which a slide valve moves. The slide valve is attached to an operating lever and the operating lever in turn connected to the undercarriage door. Any movement of the undercarriage door will re-position the slide valve-lining up various inlet and outlet ports.

2.14.2. Operation.

The deflection of the control lever is limited by internal mechanical stops. During operation of the valve, the lever motion causes displacement of the slide which successively occupies three distinct positions:-

Position 1 (DETAIL 1).

The slide isolates the supply port A, and allows communication of the service circuit U with the return circuit R (the position 1' is the maximum limit of this flow).

Position 2 (DETAIL 2).

This position of the slide constitues a hydraulic locking; all three ports A, U and R are isolated.

Position 3 (DETAIL 3).

The slide (6) isolates the port R and allows communication between the supply orifice A and the service circuit port U.

Motion of the slide from position 1 to position 3 results in the progressive blanking and then the progressive opening of the supply port U.

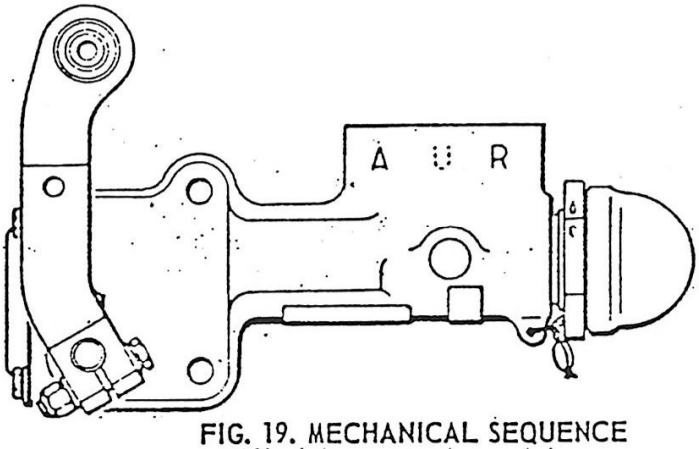

FIG. 19. MECHANICAL SEQUENCE VALVE GENERAL VIEW

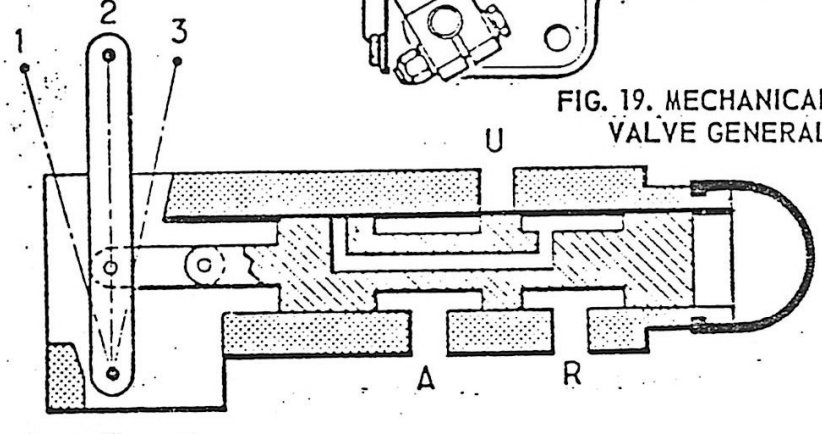

DETAIL 2 TRAVELLING

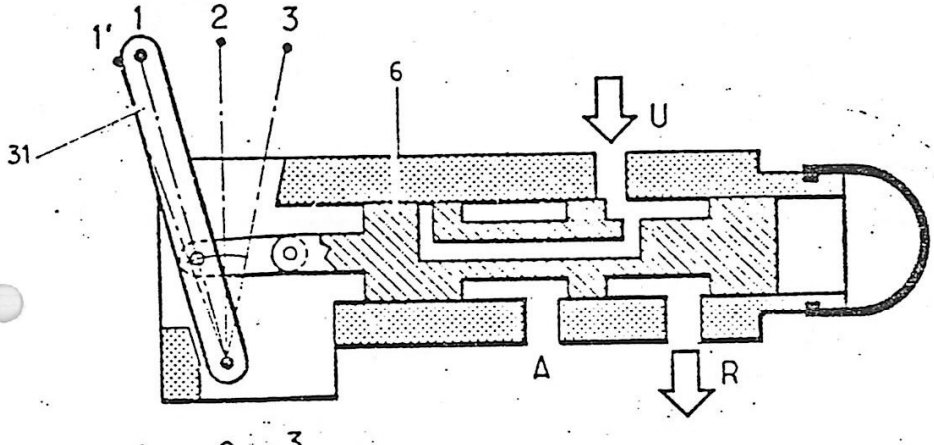

DETAIL 1 DOOR CLOSED

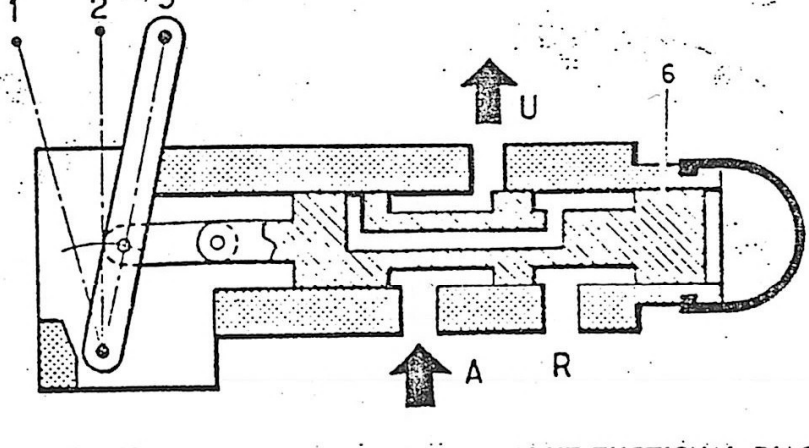

DETAIL 3 DOOR OPEN

FIG. 20. MECHANICAL SEQUENCE VALVE FUCTIONAL DIAGRAM

CHAPTER 6

AIRBRAKES.

CHAPTER 6

CONTENTS

1. AIRBRAKES.
1.1. INTRODUCTION.
1.2. CONTROLS & INDICATIONS.
1.3. DESCRIPTION.
1.4. OPERATION.
2. SYSTEM COMPONENTS.
2.1. ELECTRO HYDRAULIC SELECTOR VALVE.
2.2. LOCK UNIT.
2.3. OPERATING JACK.
2.4. THERMAL RELIEF VALVE.
2.5. TELESCOPIC STRUT.
2.6. TWO WAY RESTRICTOR.
2.7. NON-RETURN VALVES.

ILLUSTRATIONS.

FIG.1. CONTROLS & INDICATIONS.
FIG.2. A/B HYDRAULIC CIRCUIT.
FIG.3. A/B ELECTRICAL DISGRAM
FIG.4. ELECTRO HYDRAULIC SELECTOR VALVE.
FIG.5. ELECTRO HYDRAULIC SELECTOR VALVE.
FIG.6. ELECTRO HYDRAULIC SELECTOR VALVE.
FIG.7. LOCK UNIT GENERAL VIEW.
FIG.8. LOCK UNIT FUNCTIONAL DIAGRAM.
FIG.9. AIRBRAKE OPERATING JACK GENERAL VIEW.
FIG.10. THERMAL RELIEF VALVE.

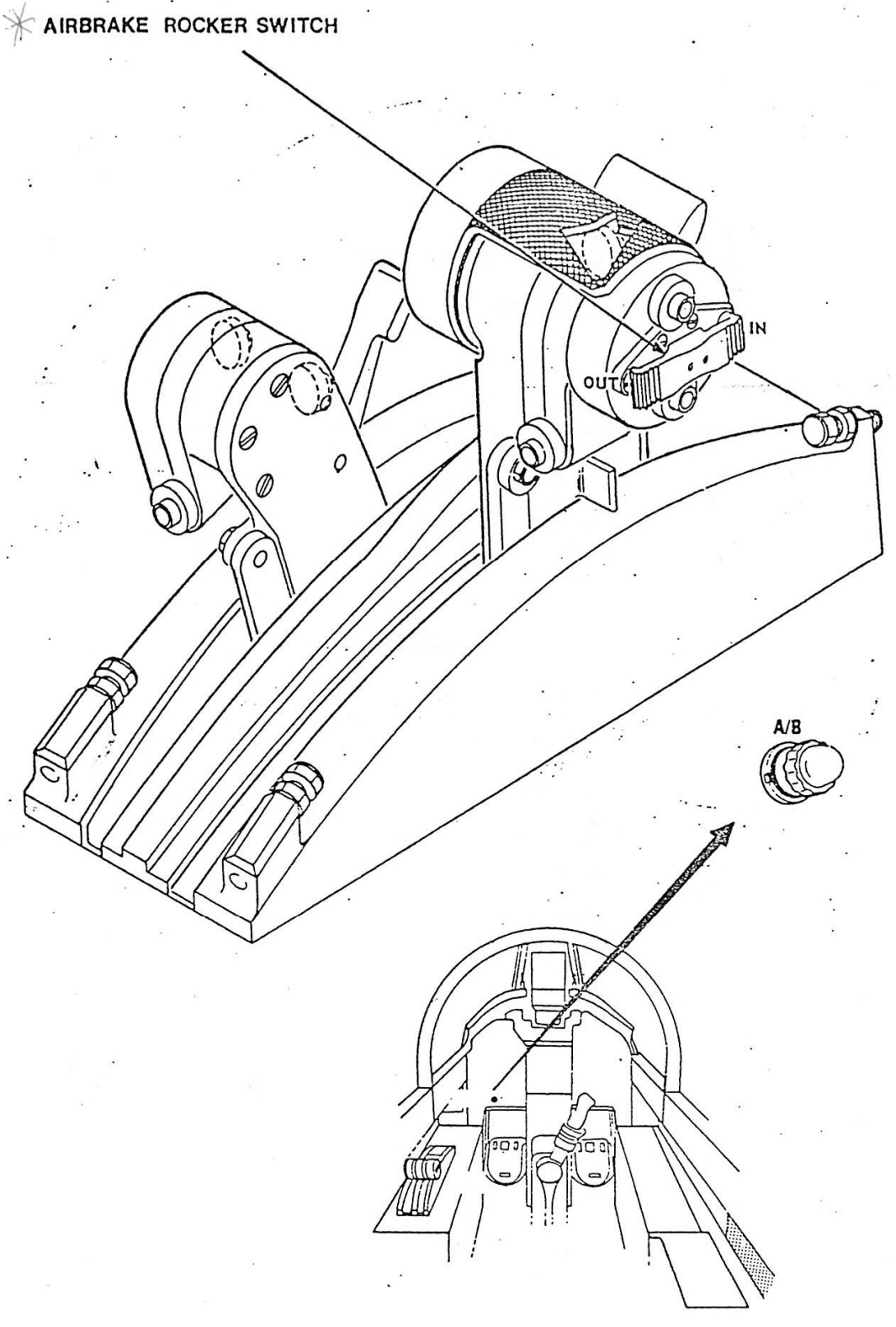

FIG. 1. CONTROLS AND INDICATORS

CHAPTER 6

PORT : MICRO
STARBOARD : ~~YAW~~ PITCH
REPLENISHMENT : BRAKES CLOSED

1. AIRBRAKES.

1.1. Introduction.

Two hydraulically operated airbrake flaps are located on either side of the centre fuselage section, to the rear of the main undercarriage bays at Frame 25. When closed the flaps overlap and fit into a recess on the outside of the engine bay doors. The airbrakes are locked in the CLOSED position by a mechanically operated 'Up Lock UNIT' which requires hydraulic pressure to unlock.

The airbrake flaps Open (To a maximum angle of 51°) and Close by the operation of a double acting jack, supplied with hydraulic pressure from No. 2 Hydraulic System ONLY. There is no provision for an Emergency operation but in the event of No.2. Hydraulic System Pump failure it is possible to operate the airbrakes by either the Power Transfer or Emergency Hydraulic Pump circuits. There is no mechanical interconnection between the two airbrake flaps, synchronisation is achieved by hydraulic pressure and airflow forces. A compensating mechanism counteracts the nose pitch up configuration the aircraft takes when the airbrakes are OPENED and the reverse will happen when the airbrakes are CLOSED.

In the closed position, the port airbrake blocks the exhaust from the engine starter air generator located in the airbrake bay.

A two-pole switch in the starting system ensures that the air generator cannot be started with the airbrakes closed and conversely prevents operation of the airbrakes whilst the air generator is running.

1.2. Controls & Indications.

Airbrake control is by a rocker selector switch situated on No.2. engine throttle. The switch is a three position switch with its Off position in the centre. Depressing the rocker switch forward gives an airbrake in selection and depressing aft will select the airbrakes to OPEN.

* An amber warning light indentified A/B located on the PORT FWD instrument panel is illuminated whenever either one of the airbrakes is not locked CLOSED.

1.3. Description.

The airbrake circuit consists of the following components:-

Airbrake Electro Hydraulic Selector Valve.

Airbrake Up Lock Units.

Airbrake Operating Jack.

1.3. (contd).

Airbrake Telescopic Links.

Two way Restrictor.

Thermal Relief Valve.

N.R.V's.

The airbrakes can be selected to fully OUT or IN and can be stopped at any intermediate position. The electrical supply to the system is 28 Volt d.c. and to prevent inadvertent operation of the system due to electrical faults, both control relay coils are connected to earth when the selector switch is in the neutral position.

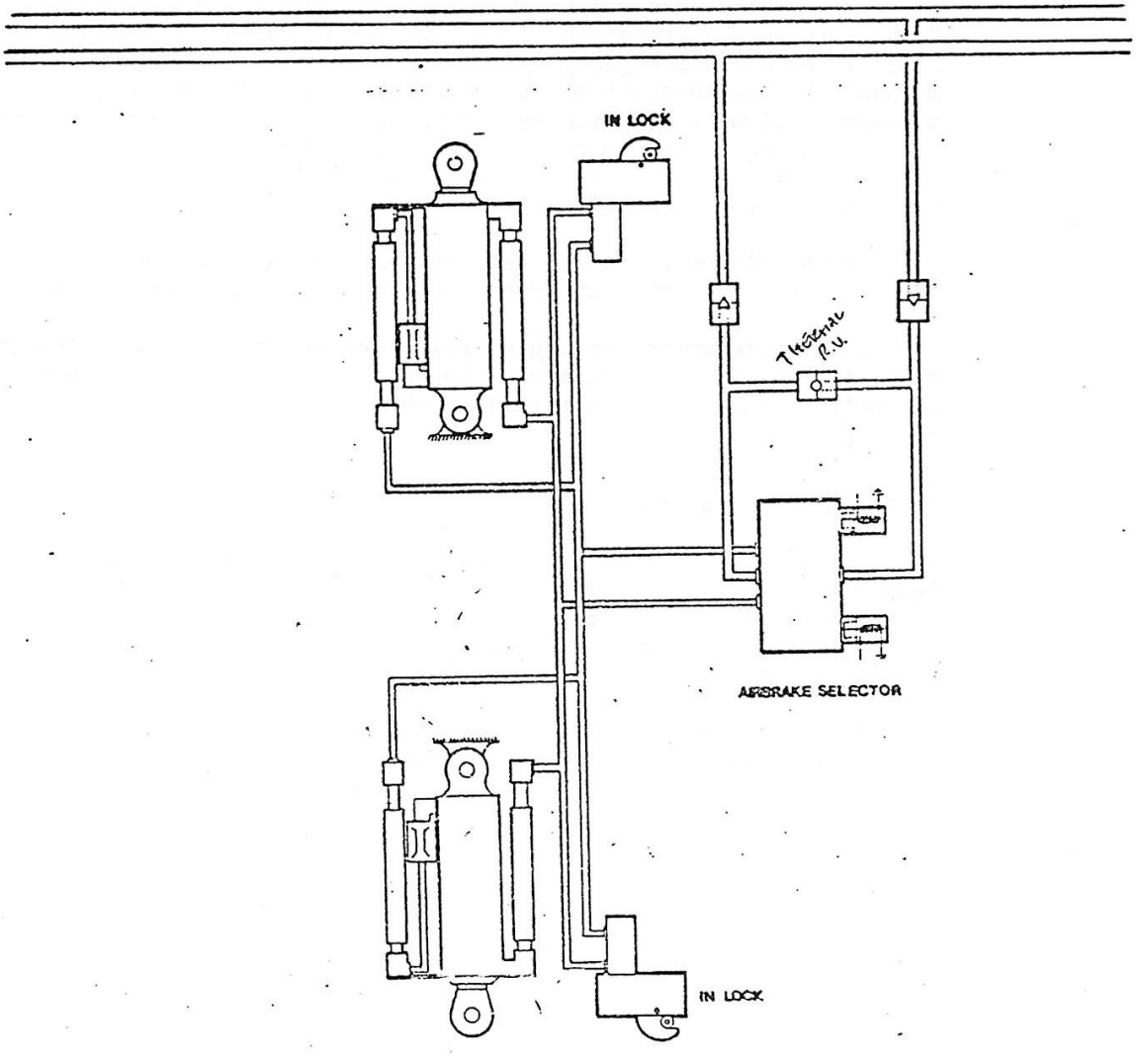

FIG. 2. AIRBRAKES HYDRAULIC CIRCUIT

1.3. (contd).

Airbrake Telescopic Links.

Two way Restrictor.

Thermal Relief Valve.

N.R.V's.

The airbrakes can be selected to fully OUT or IN and can be stopped at any intermediate position. The electrical supply to the system is 28 Volt d.c. and to prevent inadvertent operation of the system due to electrical faults, both control relay coils are connected to earth when the selector switch is in the neutral position.

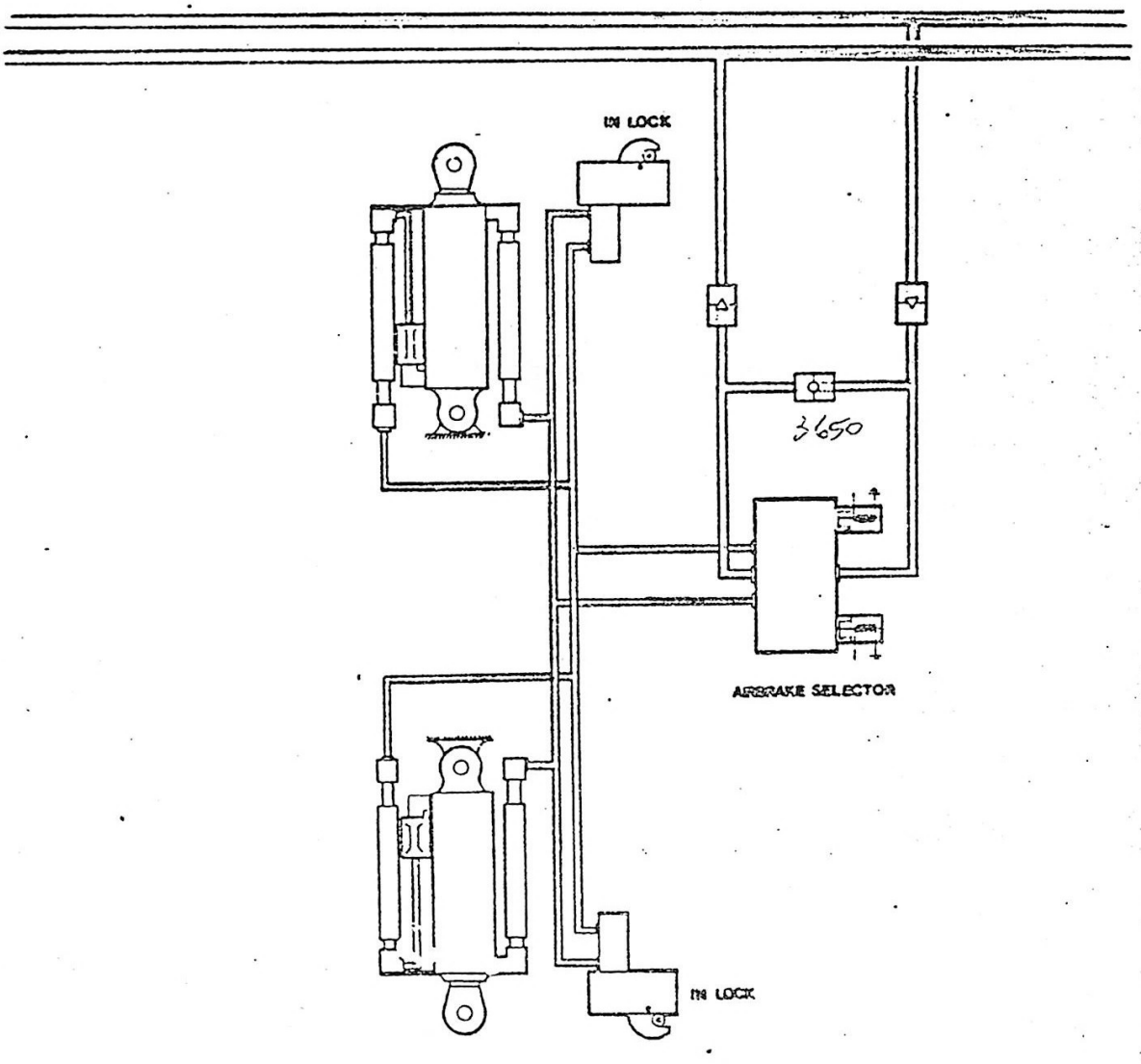

FIG. 2. AIRBRAKES HYDRAULIC CIRCUIT

1.4. Operation.

1.4.1. Airbrakes OUT.

To enable the airbrake system to be selected the AIR STARTER MASTER S/W must be selected to OFF.

With the air starter master switch selected to 'OFF', an electrical supply is connected to the air brake control switch. When an air brake 'OUT' selection is made a supply is connected to energise the OUT selection relay. In the energised state this relay connects the supply to energise the hydraulic selector valve, which in turn connects an 'OUT' demand to the air brake hydraulic circuits. The hydraulic selector will now allow pressurised hydraulic fluid to pass into the airbrake circuit to the Operating Jacks and LOCK Units'. The 'Lock Units' will unlock first because flow to the operating jacks is delayed slightly by a two way restrictor valve. Once the LOCKS have moved hydraulic pressure will extend the piston and ram of the operating jacks to an AIRBRAKE OUT SETTING.

Incorporated in each lock mechanism are two micro switches with four contacts. In the UNLOCKED condition two contacts act to connect a supply to the warning lamp, illumination of which indicates, the air brakes are unlocked. The other contact in the unlocked condition, acts to energise both solenoid valves A and B, when the air brake control switch is released. In this condition, the selector directs equal pressure to both ends of the selector valve locking the air brakes at the 'OUT' position hydraulically.

1.4.2. Airbrakes IN.

When an 'IN' selection is made on the air brake control switch the opposite relay is energised. One set of contacts act to connect a supply to energise solenoid valve 'B' while a second set of contacts act to interrupt the supply to solenoid valve 'A' provided via the airbrake OPEN micro switch. With solenoid 'A' de-energised and solenoid 'B' energised on the selector, pressure is directed to the hydraulic jacks such that the air brakes are operated to the 'IN' position.

When the air brakes reach the fully 'IN' position, they are locked in that position by the operation of the lock mechanisms.

The amber warning light will be extinguished because the micro switch contacts in the 'Lock UNIT' will now have changed over to the LOCKED position.

When 'both' locks have reached the fully 'LOCKED' position, contacts in the lock micro switch operate to energise selector solenoid 'A' and the hydraulic jacks are stopped at that datum, because both selector solenoids are again energised.

Releasing the selector switch to neutral will cause both solenoid valve A and B to become de-energised which will release all hydraulic pressure (at both ends of the selector valve) back to low pressure return

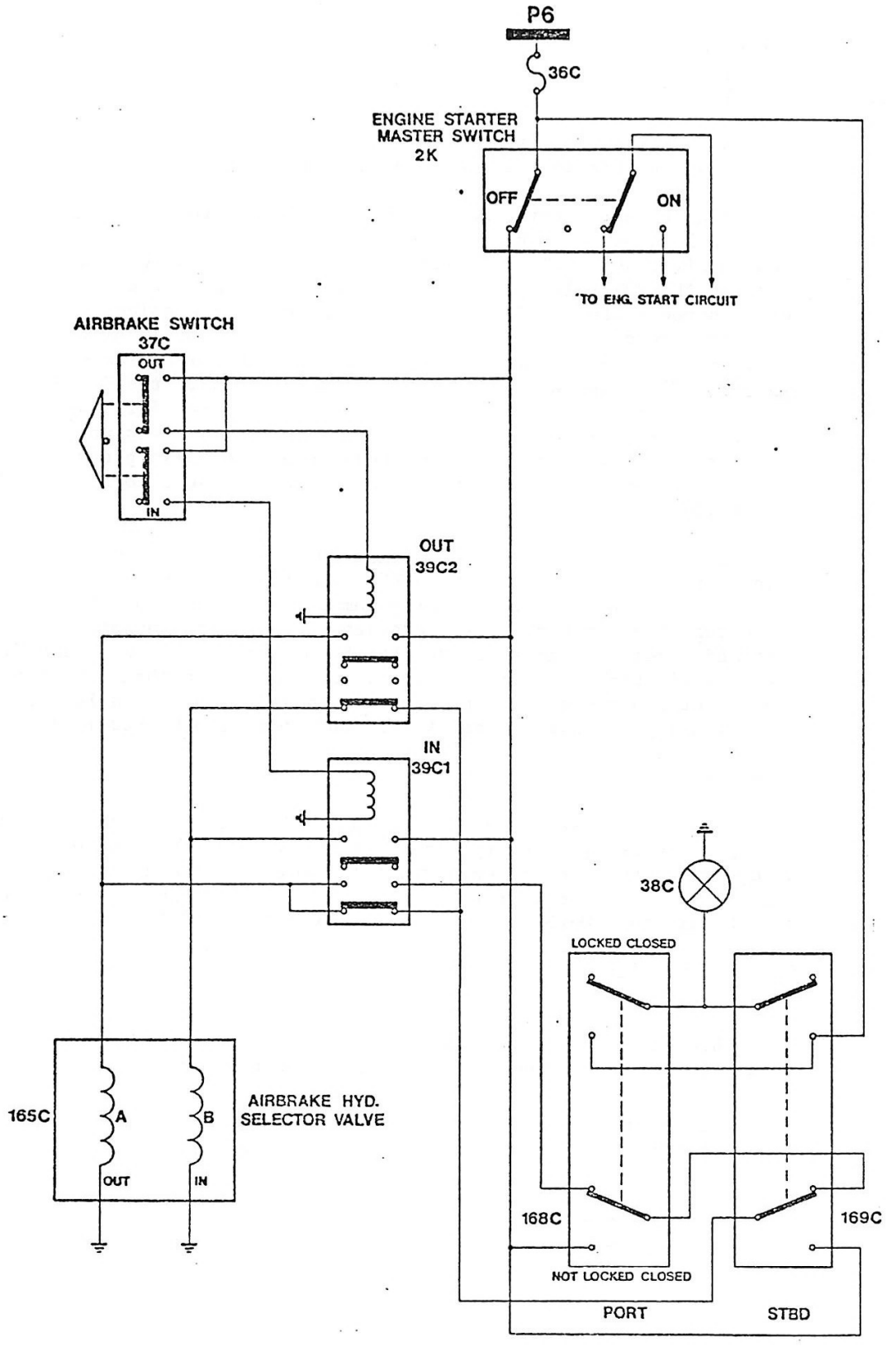

FIG. 3. AIRBRAKES ELECTRICAL DIAGRAM

2. SYSTEM COMPONENTS.

2.1. Electro Hydraulic Selector Valve.

2.1.1. Introduction.

This selector is electrically operated to direct fluid to either of two services and to simultaneously open the return line from the other service. The main flow of fluid is controlled by a bobbin type valve operated by the fluid directed, as required, by two pilot valves each operated by a solenoid. When both solenoids are de-energised, the bobbin is in the central position so that supply fluid to the services is cut-off, but return fluid from the services is able to flow to the return connection via a non-return connection via a non-return valve or past a vent in the bobbin.

2.1.2. Description.

The body of this unit houses a bobbin valve assembly, a non-return valve and two identical pilot valves each connected by fluid ways to pipe adapters which provide for connection purposes.

The bobbin valve assembly directs fluid through drillings to the selected connection ports. Each end of the bobbin valve is spring loaded by an identical spring interposed between spring guides which are retained in the body by a sealed end fitting which is screwed in to secure the liner in a centralised position.

The non-return valve consists of a spring-loaded ball which operates within a spring-guide to seal off the fluid way through one end of the bobbin.

Each pilot valve assembly comprises of a spring, filter, and two sealed valve seats and a spacer, shimmed for fitted spring length and ball movement. A push rod locates through the spacer and the outer valve seat to contact a ball valve which operates between the two valve seats. Centrally surmounting each pilot valve assembly is a solenoid, with its spring-loaded armature contacting the end face of the pilot' valve push rod from which it is withdrawn to actuate the pilot valve when energised. A sealed screw in the solenoid provides for adjustment, while a plug receptacle is retained by four cap screws to receive the plug carrying the electrical supply from the aircraft to the unit.

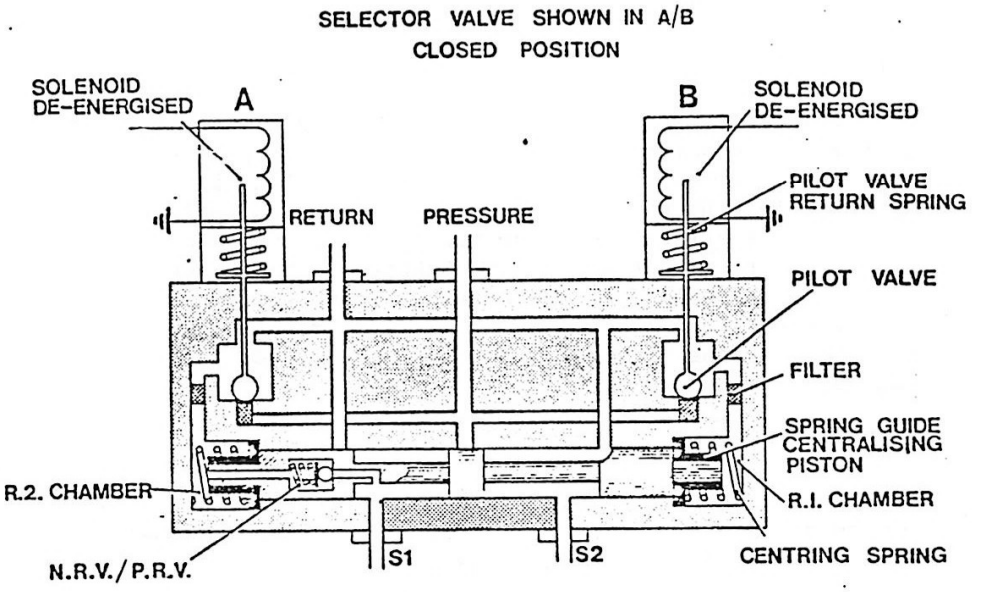

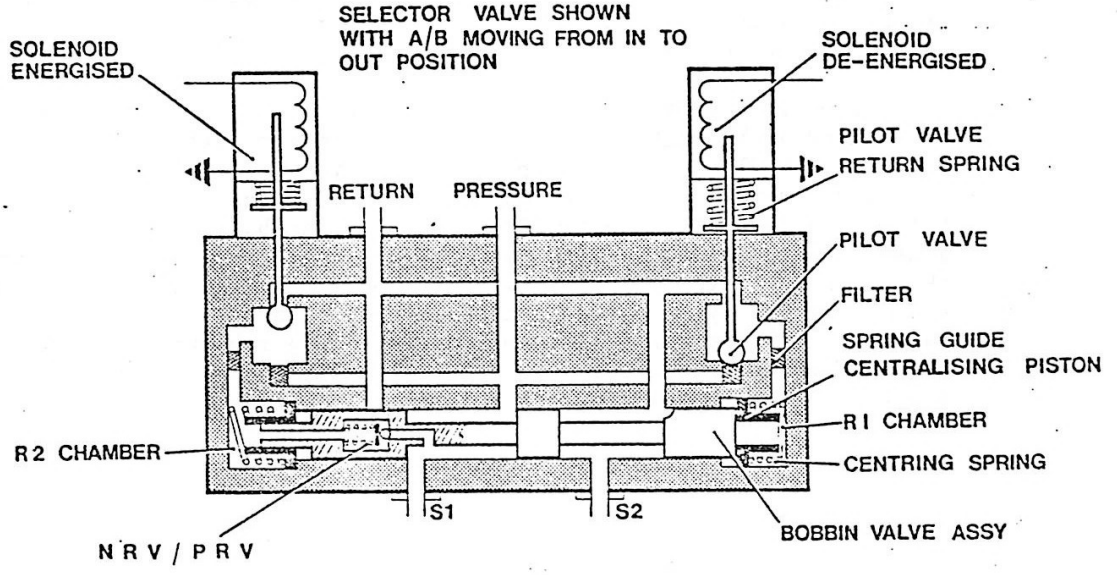

S 1 A/B JACK EXTEND

S 2 A/B JACK RETRACT

FIG. 4 & 5 SELECTOR VALVE (AIRBRAKES) TYPE 8670 MK. 3.

2.1.3. Operation.

When both solenoids are de-energised FIG 4 the solenoid armature in each pilot valve is extended by its spring to thrust the ball valve against the inner valve seat. Supply fluid is thus cut off and the spring at each of the liner centralises the bobbin the central flange of which closes the pressure port in the liner, thus preventing fluid flow through the unit. Return fluid from service connection S2, however, will be able to pass through the vent in the adjacent flange of the bobbin and return via the fluid ducts in the body to the system low pressure return and from S1 service connection via the non-return/pressure relief valve.

When either solenoid is energised, the solenoid armature retaining the applicable valve against its seat is withdrawn and supply fluid from connection P unseats the ball valve and flows via the fluid ducts in the body to the appropriate end of the bobbin assembly where axial movement of the bobbin in the pre-selected direction then permits the passage of fluid to service connection S1 or S2 as required. The non-return valve sealing off end of the bobbin, remains fully closed during powered operation, permitting, when de-energised, manual movement of the associated airframe component, and the relief of hydraulic pressure from the de-energised unit, in order to facilitate ground servicing of the relevant aircraft.

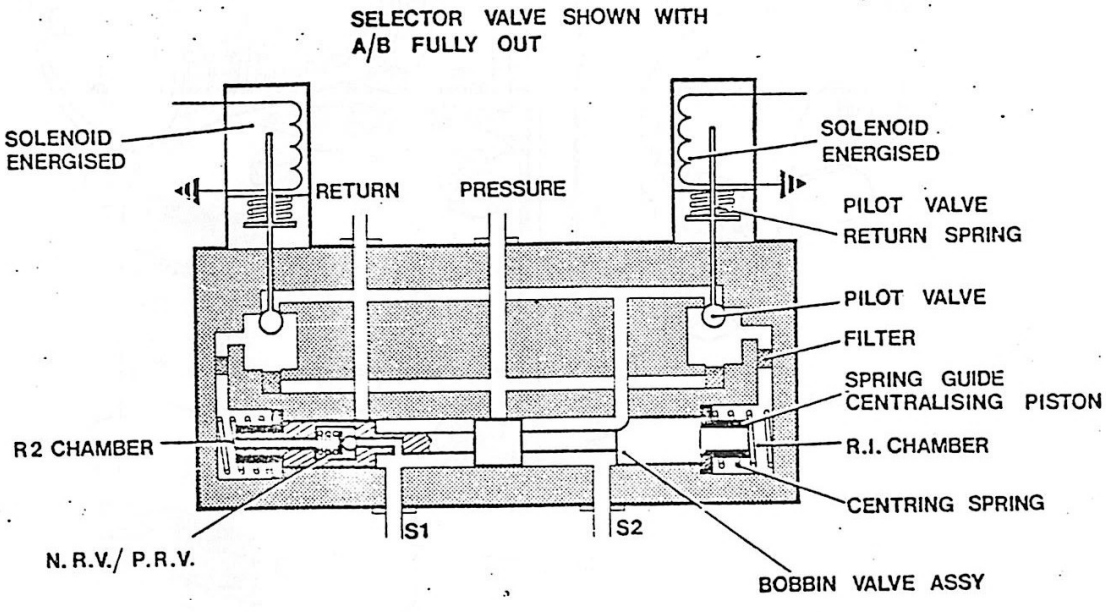

FIG. 6. SELECTOR VALVE AIRBRAKE

2.2. Lock Unit.

2.2.1. Introduction & Description.

Two types of lock units are fitted to the airbrake circuit which are identical in operation but differ slightly for handing Port and Starboard. The handing is determined by the side on which the hook and guide plates are positioned.

Each unit consists of three sub-assemblies, the switchbox, the hydraulic jack and the main body. The actual lock is formed by the swivelling hook and the adjacent fixed guide plate which secure a pin fixed to the airbrake to retain it in the 'locked-in' position. The lock is released by the application of hydraulic pressure to one side of a small hydraulic jack. The switchbox houses two micro-switches actuated by a forked lever to indicate the 'locked' or 'unlocked' condition of the unit. The switches are wired to a cable connector in the switchbox casing.

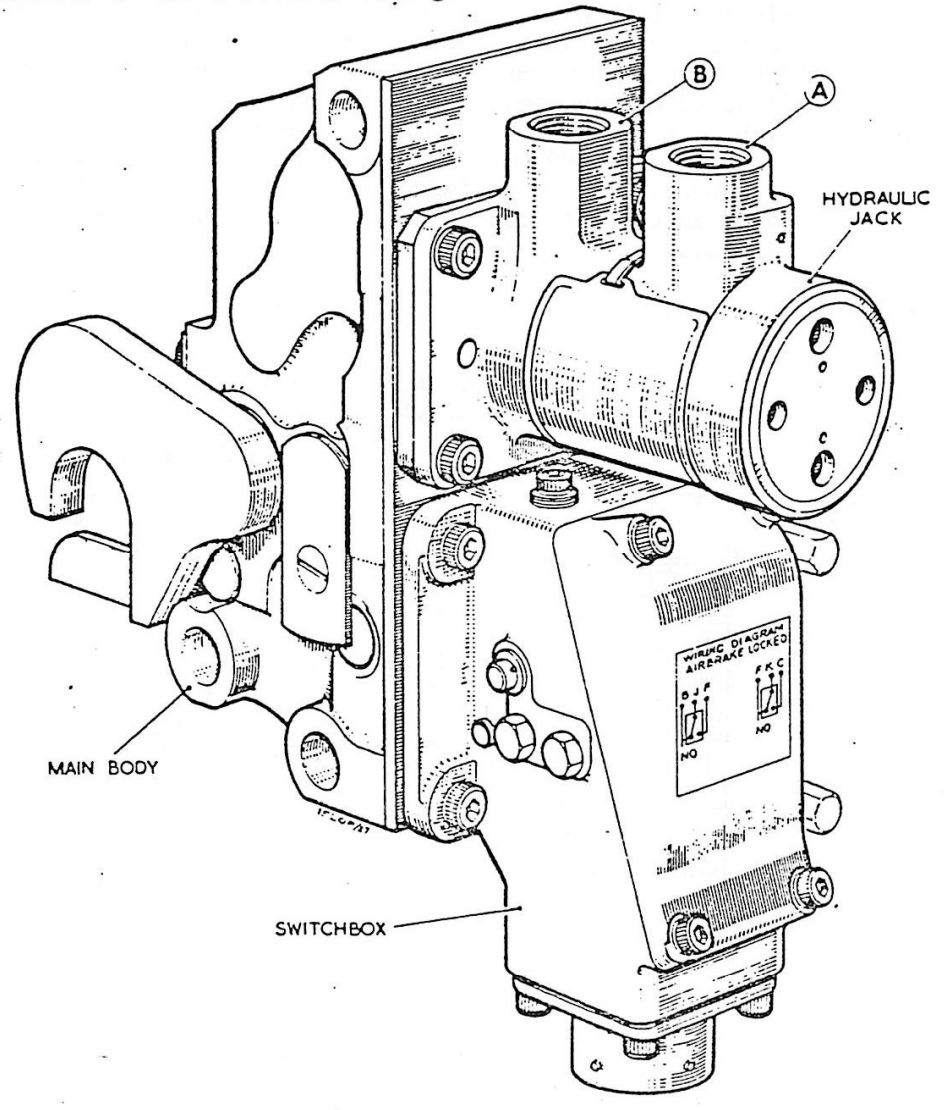

FIG. 7. LOCK UNIT GENERAL VIEW

2.2.2. Operation.

Static Lock:

When the unit is in the locked condition the hook is secured in the down position by the roller of the lever engaging with the lock recess of the latch, the jack piston is retracted, the latch springs are under tension, and each microswitch plunger is depressed.

Unlocking:

On selection of 'air brake open', the piston of the jack is extended by fluid pressure applied at connection A to move the lever and in doing so lifts the lever roller free from its engagement with the latch. The latch, now free of restraint, is rotated by the reaction of its springs, thereby rotating the hook to release the lock pin, while each microswitch plunger extends during the final movement of the switch lever to signal that the lock is released.

Locking:

When 'air brake closed' is selected, the piston of the jack is retracted by fluid pressure applied at connection B. With the piston retracted, the lever returns to its original position under the influence of its springs. Simultaneously the air brake lock pin engages with the hook, which moves to the locked position as the lever roller moves over the latch profile to enage in its recess, the latch springs are tensioned during this action preparatory to the unlocking procedure. As the lever reaches its final position, the plunger of each microswitch is depressed by the switch lever to signal that locking has been achieved.

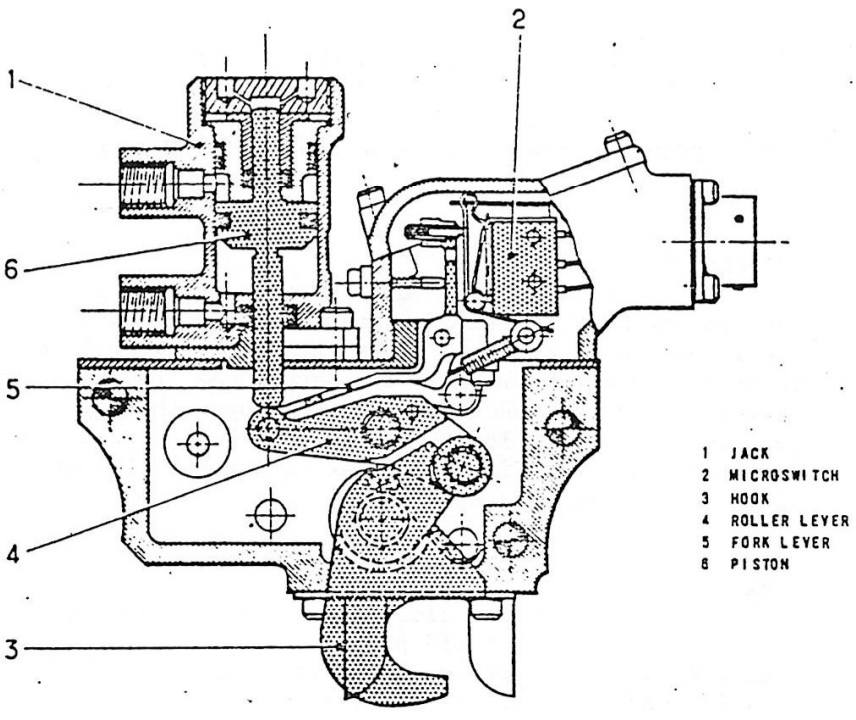

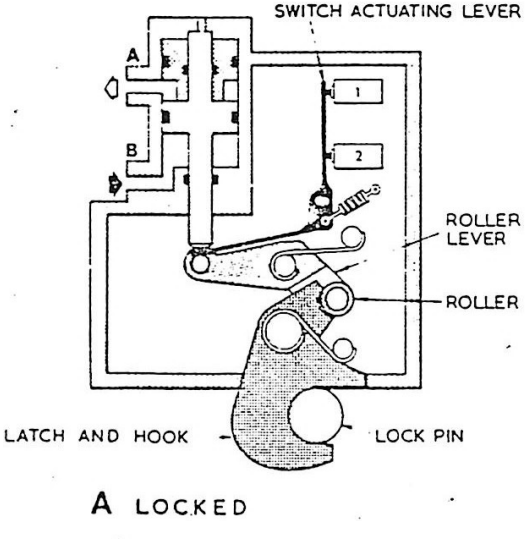

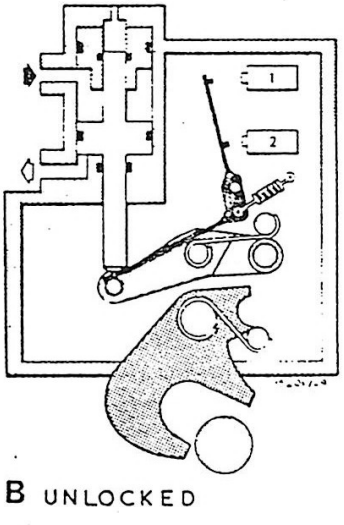

FIG. 8. AIRBRAKE LOCK UNIT (FUNCTIONAL DIAGRAM)

2.3. Airbrake Operating Jack.

2.3.1. General Description & Operation.

The airbrake jack attached to the airframe structure at one end with its ram eyed end secured to the airbrake flap has two fluid connections located at the piston rod end of the unit and an external pipe incorporating a Messier restrictor, conveys fluid to and from the piston at the opposite end of the unit.

The unit consists of a sealed piston with an integral piston rod operating in the bore of the cylinder. The rod moves in a sealed gland carrier which is secured to the cylinder end by a ring nut. The opposite end of the cylinder is extended to provide an attachment lug containing a self-lubricating spherical bearing. An eye bolt, also incorporating a self-lubricating spherical bearing, is screwed into the outer end of the piston rod. The length of the projecting portion of the eye bolt can therefore be adjusted to achieve the required attachment centres. The jack is extended and retracted by the alternate application of fluid to either end.

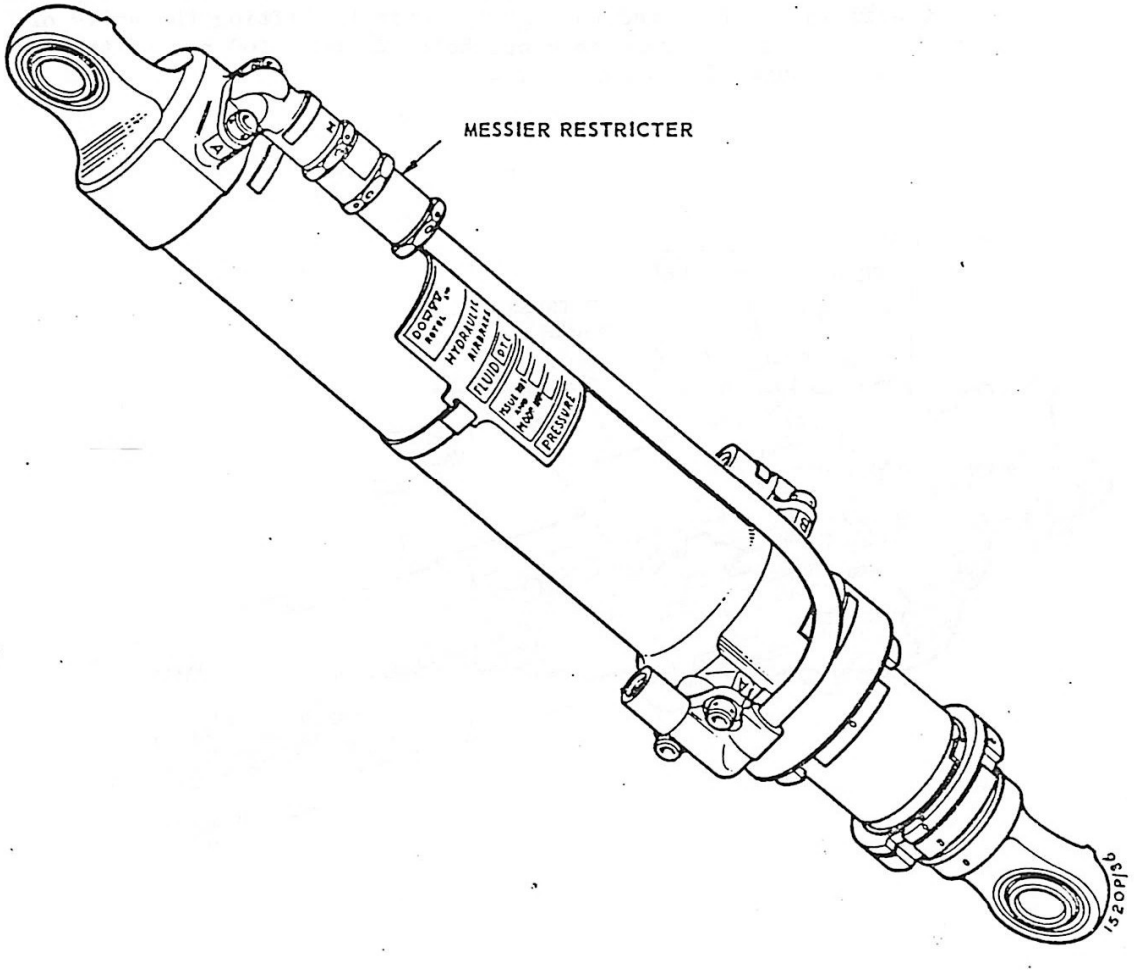

FIG. 9. AIRBRAKE OPERATING JACK GENERAL VIEW

2.4. Thermal Relief Valve.

2.4.1. Description and Operation.

The body houses a spring-loaded poppet valve operating in a guide which, together with the valve seat and a filter, is contained in an end fitting screwed into the body. A sealing ring provides a leak-proof joint between the body and end fitting and the valve seat is also sealed in the end fitting by an 'O' ring with a back-up washer. A filter disc, supported between a pair of spacers is spring-loaded against the underside of the valve seat. The body provides for a male pipe coupling and the end fitting for a female coupling. A red arrow head on the body and a black arrow head on the nameplate both indicate the direction of fluid flow through the unit.

The valve is installed in a hydraulic system in order to relieve fluid pressure in excess 3,600 ± 100 p.s.i. caused by expansion of the fluid due to a rise in temperature.

Excess pressure at the inlet connection due to thermal expansion of the fluid, is relieved through the unit by lifting the valve off its seat. When the pressure drops below 3,200 ± 100 p.s.i. the valve seats under its spring load.

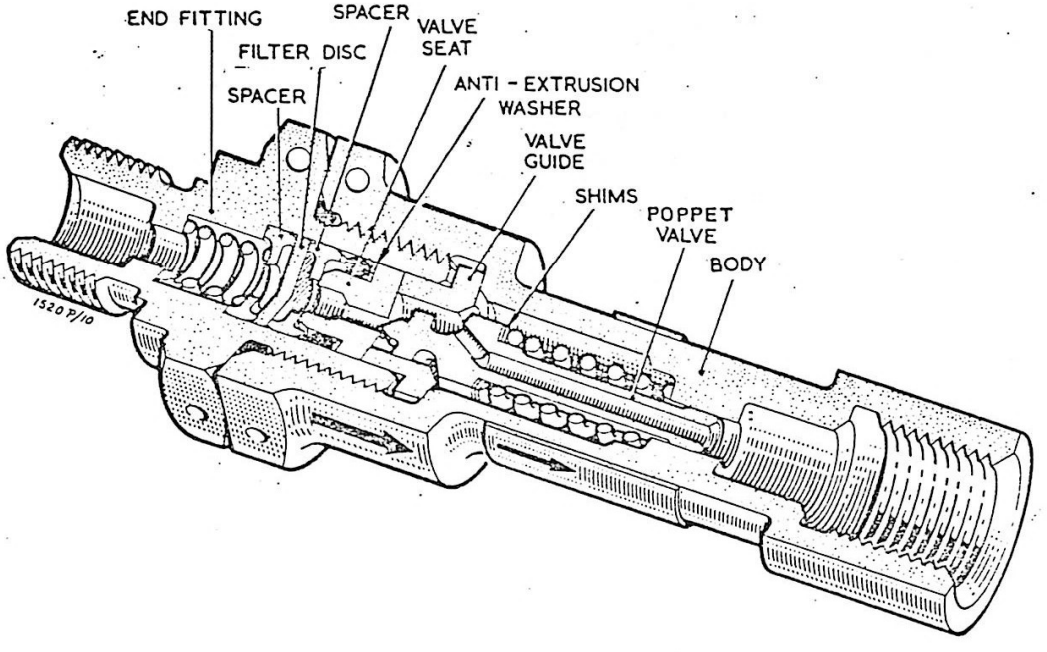

FIG. 10. THERMAL RELIEF VALVE.

2.5. Telescopic Union Struts.

2,5.1. Description & Operation.

Each operating jack has two of these unions. They enable the ends to move in accordance with the motion of the jack.

2.6. Two Way Restrictor Valve.

2.6.1. Description & Operation.

This type of restrictor valve is previously explained in Chapter 1 (Para 2.22). The two reasons for its fitment in the air-brake circuit is to ensure that the LOCKS release before the operating jacks extend and to control the flow of fluid to and from the jack chamber, determining the operating times.

2.7. Non Return Valves.

2.7.1. Description & Operation.

Two non-reyurn valves are fitted to the A/B circuit similar to those described in Chapter 1 (Para 2.21) one located before the electro hydraulic selector valve and the other located in the system, low pressure, return line to the hydraulic reservoir.

The purpose of these valves is to maintain the airbrakes in the extended position should a pressure drop occur in the supply system (e.g. as a result of operating another service). Whilst the second non-return valve protects the system and selector valve from excess return pressures within the hydraulic return lines.

CHAPTER 7

WHEEL BRAKE AND ANTI - SKID SYSTEMS.

CHAPTER 7

CONTENTS.

1. WHEEL BRAKE SYSTEM.
1.1. INTRODUCTION.
1.2. CONTROLS & INDICATION.
1.3. DESCRIPTION.
1.4. OPERATION.

2. BRAKE SYSTEM COMPONENTS.
2.1. MECHANICAL SELECTOR.
2.2. NORMAL BRAKE RELAY VALVE.
2.3. EMERGENCY BRAKE RELAY VALVE.
2.4. FOOT MOTOR RESERVOIR.
2.5. FOOT MOTOR.
2.6. ACCUMULATOR.
2.7. NON-RETURN VALVES.
2.8. PRESSURE RELIEF VALVE.

3. ANTI SKID CONTROL.
3.1. INTRODUCTION.
3.2. DESCRIPTION.
3.3. OPERATION.

4. ANTI-SKID SYSTEM COMPONENTS.
4.1. CONTROL VALVE.
4.2. CONTROL BOX.

CHAPTER 7.

ILLUSTRATIONS.

FIG.1. WHEEL BRAKE OPERATION.
FIG.2. BRAKE CONTROL HANDLE.
FIG.3. WHEEL BRAKE SYSTEM LAYOUT.
FIG.4. BRAKE CONTROL VALVES SCHEMATIC.
FIG.5. MECHANICAL SELECTOR CUT-AWAY VIEW.
FIG.6. MECHANICAL SELECTOR FUNCTIONAL DIAGRAM.

FIG.7. NORMAL BRAKE RELAY VALVE.
FIG.8. EMERGENCY BRAKE RELAY VALVE.
FIG.9. FOOT MOTOR RESERVOIR.
FIG.10. FOOT MOTOR.
FIG.11. ANTI-SKID SYSTEM MECHANICAL.
FIG.12. ANTI-SKID SYSTEM ELECTRICAL.
FIG.13. ANTI-SKID CONTROL VALVE.

CHAPTER 7

1. WHEEL BRAKES SYSTEM.

1.1. Introduction.

The Wheel Brakes of the Jaguar are of the multi-piston type plate brake. The heat pack comprises of jigsaw type segmented rotor assemblies located between stator assemblies carrying inorganic pads.

'Normal' braking pressure is supplied from No.1. Hydraulic System. 'Emergency' and 'Parking' brake pressures are supplied from No.2. Hydraulic System.

'Normal' 'Emergency' and 'Parking' selections are controlled by a mechanical selector.

Differential and progressive braking are controlled by foot motors connected to the rudder pedals and an anti-skid system operates in the 'Normal' selection only.

Additionally the wheels are automatically braked during undercarriage retraction. Separate brake unit pistons are used for 'Normal' and 'Emergency' braking. 4/4

The Main features of the Wheel Brake System and components within the circuit are:-

Hydraulic transmission by foot motor to the relay valves.

A 'Normal' control relay valve and circuit.

An 'Emergency' control, relay valve and circuit.

A Mechanical selector.

A Goodyear Anti-skid system which comprises:-

Wheel speed sensor.

Control Box.

Anti-skid Valve.

Combined Normal/Emergency Foot Motors.

Foot Motor Reservoirs.

Accumulator.

Non-Return Valves.

Pressure Relief Valve.

Four Brake Units.

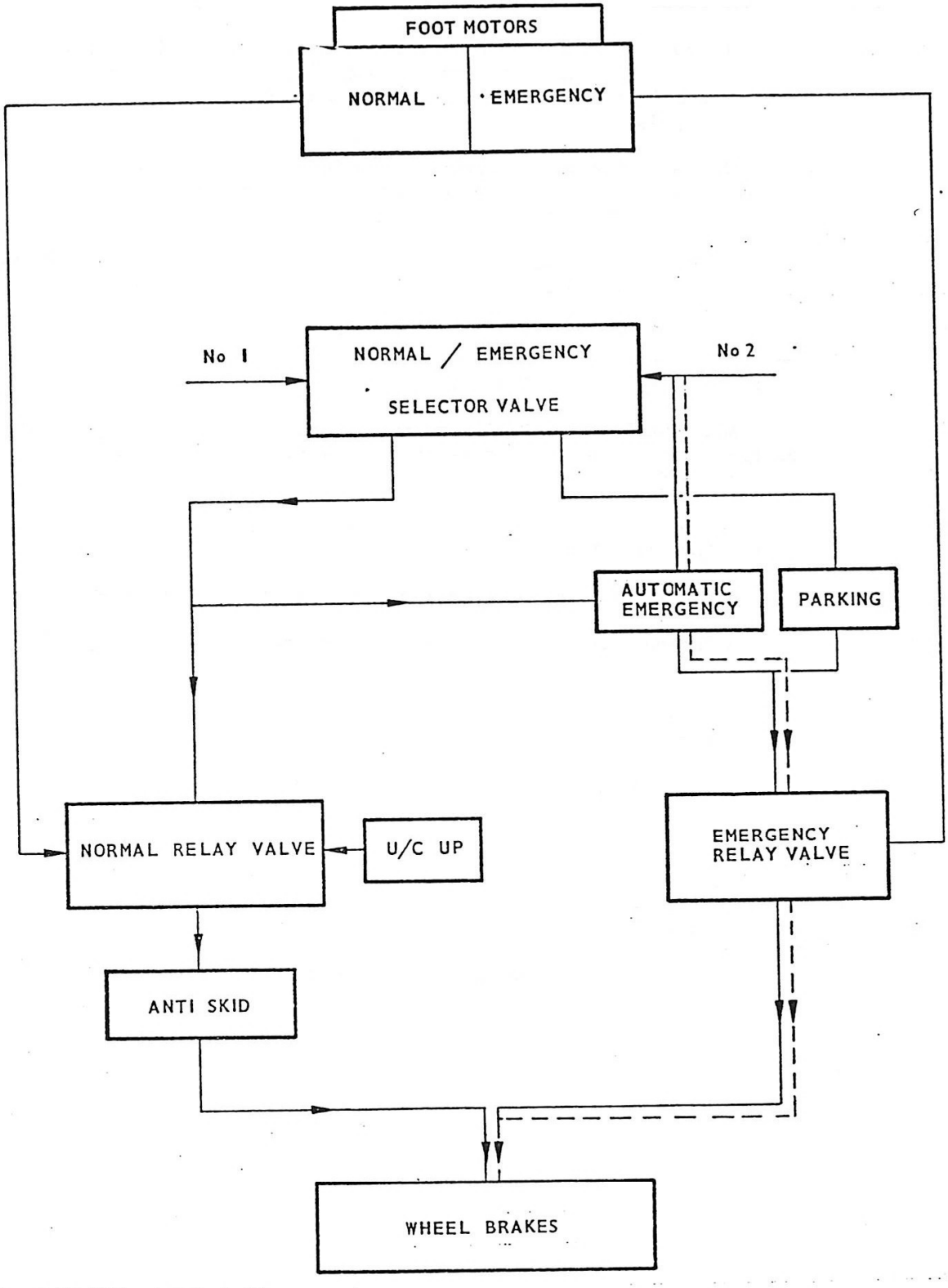

FIG. 1 WHEEL BRAKE OPERATION.

N°1 NORMAL - ANTI/SKID
N°2 PARKING - EMERGENCY (AUTO TAKEOVER NO INDICATION)

1.2. Control & Indication.

1.2.1. General Description.

The selection of either NORMAL, EMERGENCY or PARKING brake is achieved by a selector handle situated in the cockpit on the starboard side of the front instrument panel. This handle directs either No.1. or No.2. Hydraulic System Pressure to the two control relay valves, via a mechanical selector valve, and in the case of a PARKING selection straight into the brake unit operating pistons. No cockpit indication, of brake pressure available for use, is shown except when hydraulic pump pressure is maintained. Parking Brake Pressure is indicated by the Brake Accumulator skin gauge located on the port side of the fuselage

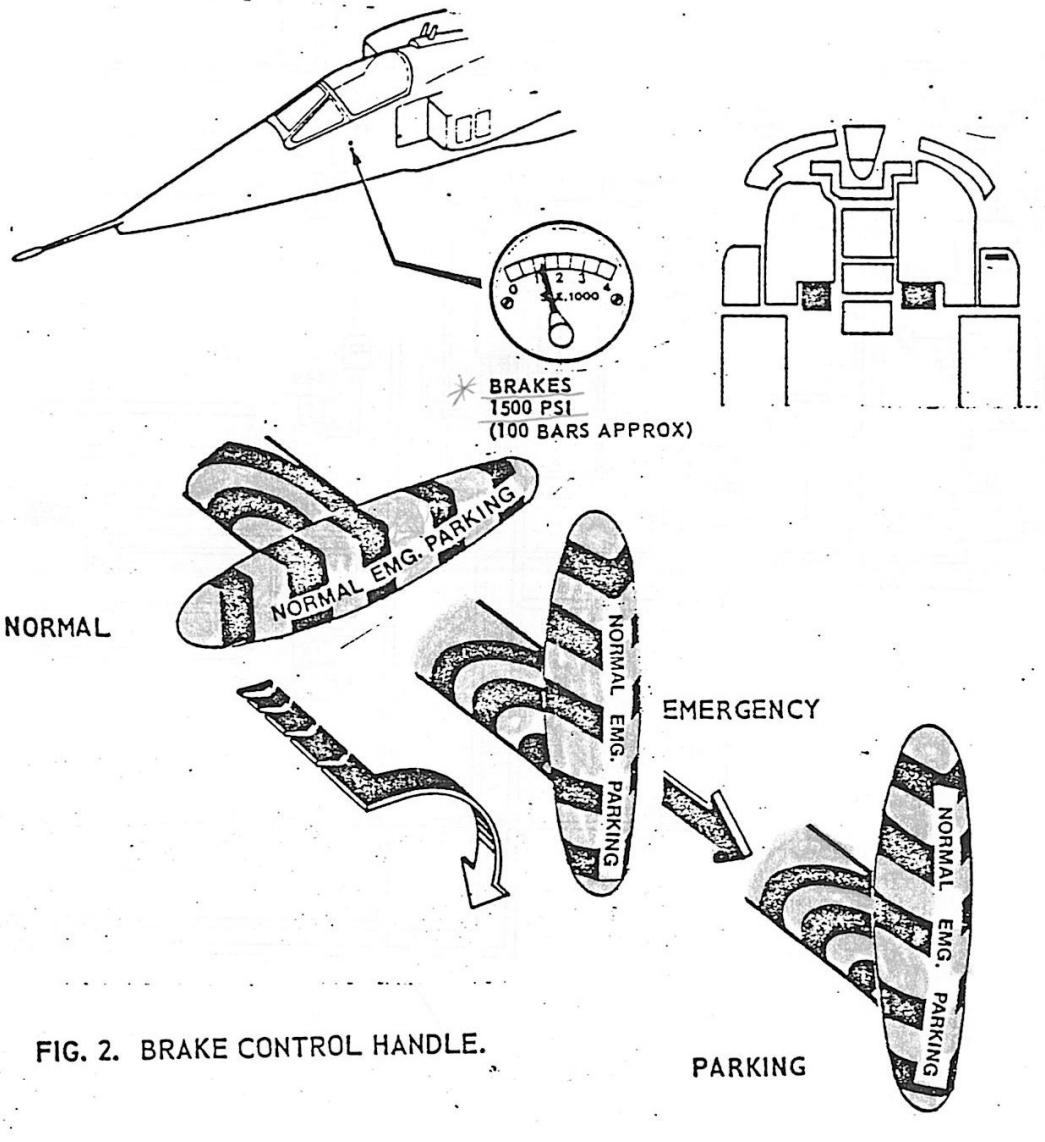

FIG. 2. BRAKE CONTROL HANDLE.

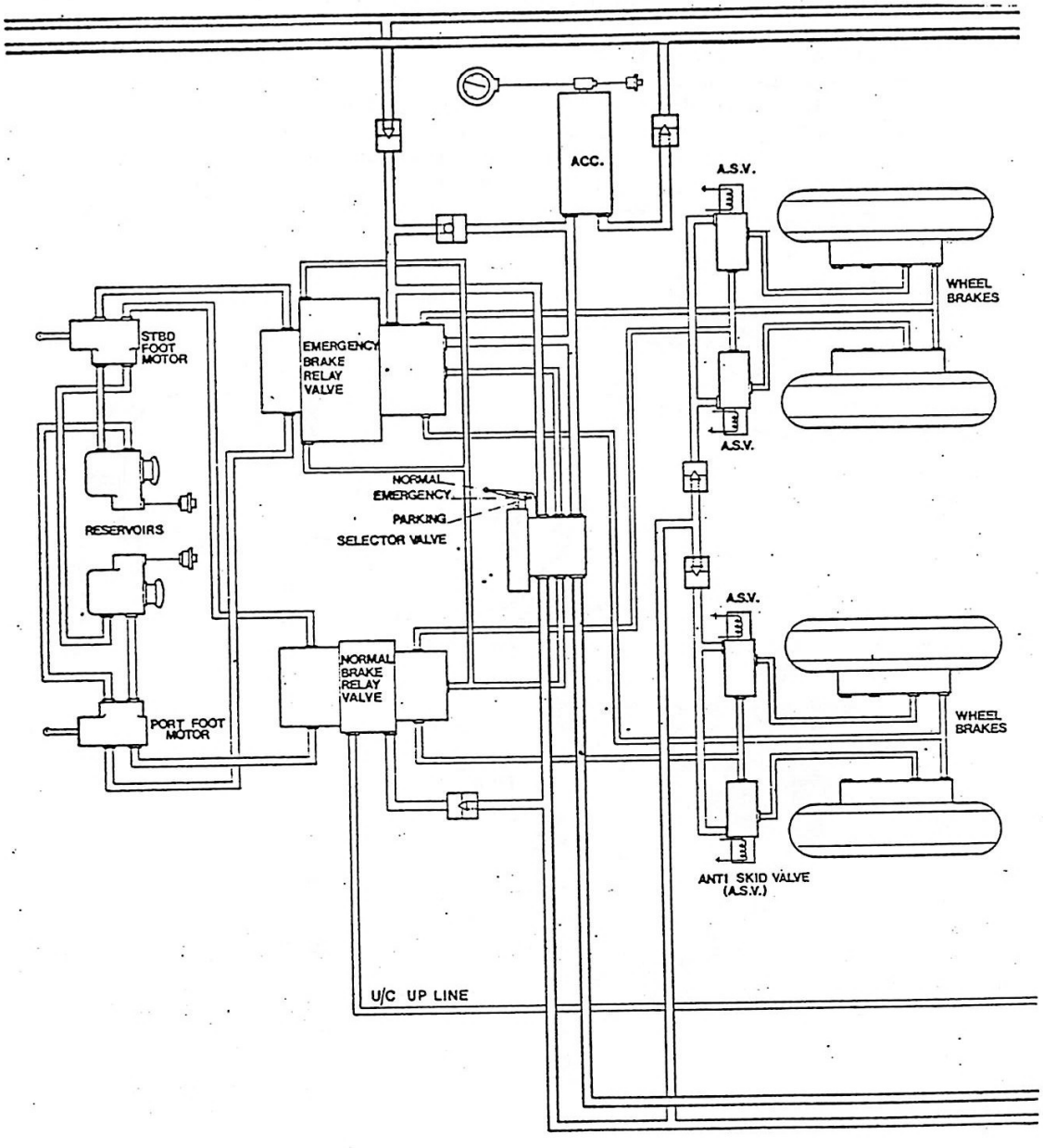

FIG. 3 WHEEL BRAKES LAYOUT.

1.3. Description.

1.3.1. Transmission Circuit.

This circuit provides progressive and differential control from the rudder pedals to the 'Normal' and 'Emergency' brake relay valves and contains two foot motors and two reservoirs.

The foot motors are mechanically linked to the rudder pedals. Pedal operation moves a duplex piston in the corresponding foot motor causing an hydraulic action in each of the pistons which operate its relevant piston proportionally in the brake relay valve.

The reservoirs are situated on either side of the cockpit forward of the instrument panels. They maintain a supply of fluid for the operation of the foot motors. One supplies the 'Normal' piston of the two foot motors the other supplying the 'Emergency' pistons of the two foot motors.

The reservoir fluid is pressurised to below 1 bar 14.5 P.S.I. by a bellows which also serves to abosorb pressure variations in the system.

1.3.2. 'Normal' Relay Circuit.

The 'Normal' brake relay valve, located in the nose undercarriage bay provides for two braking operations:-

'Normal' braking where it amplifies the low pressure from the foot motors to enable high pressure delivery to the brake units proportional to the foot motor pressures with anti-skid control.

* 'Normal' brake pressure 0 to 150 bars (or 0-2250 p.s.i).

Automatic braking on Undercarriage UP selection.

1.3.3. Emergency Relay Circuit. EMERGENCY NO ANTI/SKID

Operation of the Emergency brake relay is normally prevented by pressure from No.1. Hydraulic System.

The relay is situated in the nose undercarriage bay and functions in two ways:-

To provide Emergency braking when pressure from No.1.Hydraulic System falls, whereby it delivers a supply of pressure to the brakes proportional to the command pressure generated by the foot motor.

If the pressure from No.1. system drops below Maximum braking pressure of 150 bars (or 2250 p.s.i) the emergency relay will deliver a pressure corresponding to the difference between the maximum normal braking pressure and the low pressure being obtained from No.1. system.

NOTE: The emergency supply by-passes the anti-skid system in both cases. For 'Parking' whereby it delivers a predetermined pressure to the brakes when the 'Parking'selection is made in the cockpit.

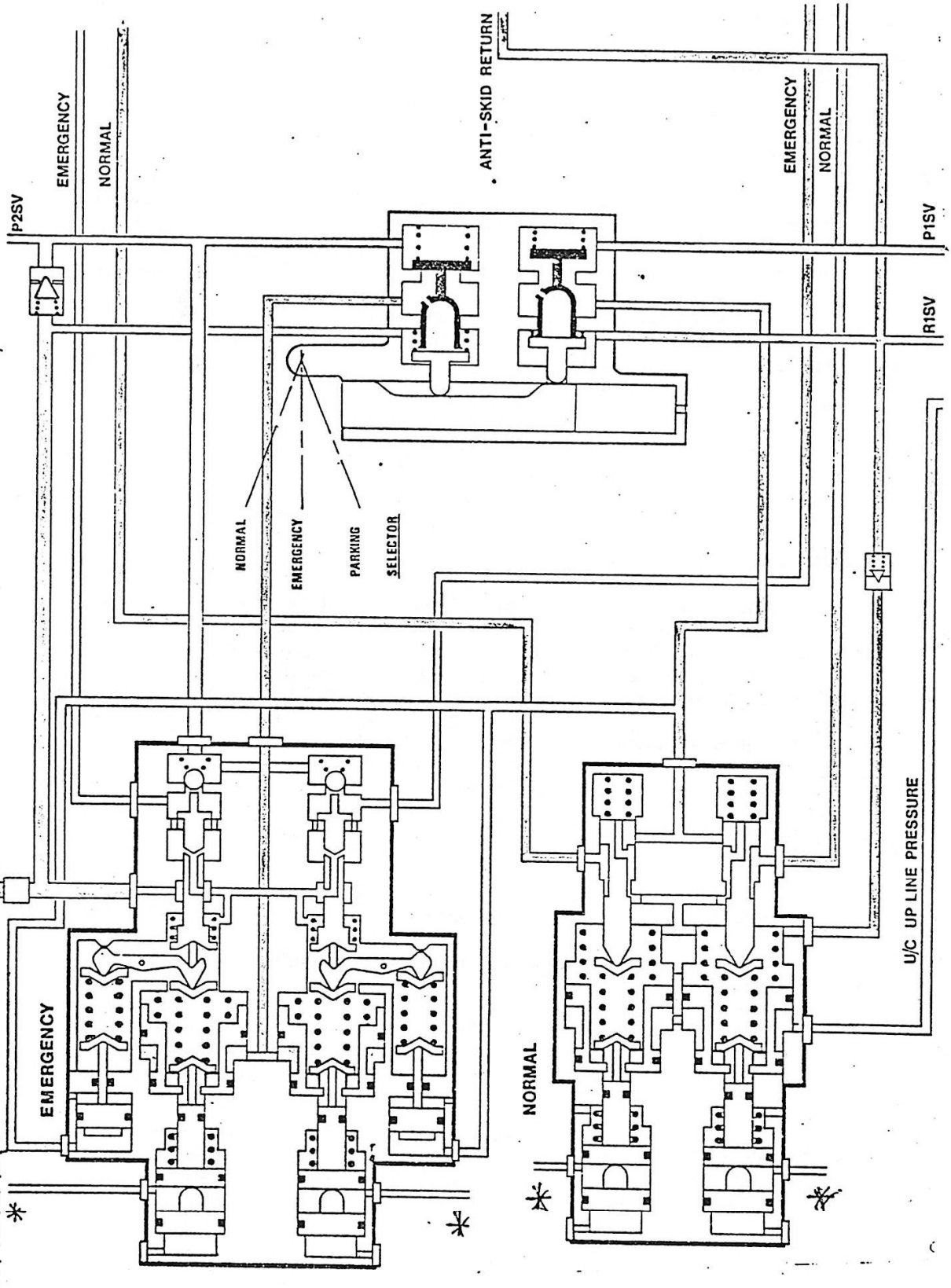

FIG. 4 BRAKE CONTROL VALVE.

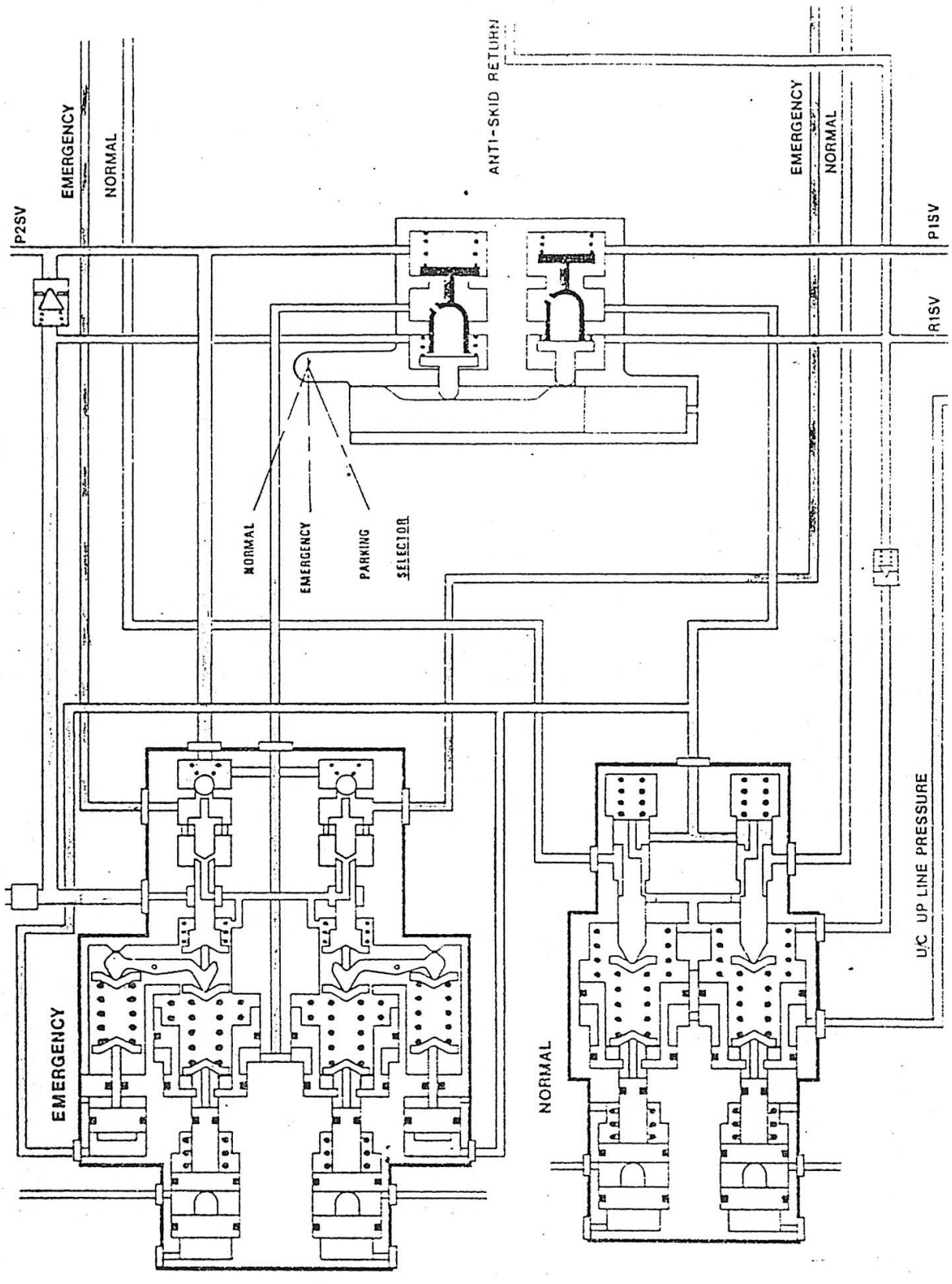

FIG. 4 BRAKE CONTROL VALVE.

1.4. Operation.

1.4.1. System Selection.

The braking system must be selected by the selector handle situated in the cockpit, to either NORMAL, EMERGENCY or PARKING, depending upon the configuration required. Movement of the selector handle operates a mechanical selector valve via a teleflex control to the desired position.

1.4.2. NORMAL (Handle Fully IN). MIN- 2,000 PSI.

In this position the NORMAL and EMERGENCY brake relay valves are supplied with hydraulic pressure from No.1.HYDRAULIC SYSTEM via the mechanical selector valve. Hydraulic pressure at 3,000 p.s.i. will be felt at ports in the NORMAL selector valve but will not pass through until the transmission circuit is operated. The same hydraulic pressure will alo be felt in two ports in the EMERGENCY relay valve which acts on the two pistons, which oppose the pilots signal pressure, whereby making the emergency relay inoperative whilst No.1. system pressure is available.

As footmotor pressure is applied to the rudder pedals the transmission circuit will OPEN a supply line in the NORMAL relay valve, allowing hydraulic pressure to pass via an anti-skid control valve into the brake units. By releasing the footmotor pressure the transmission pressure will decrease to zero allowing all hydraulic pressure to the brake units to dissipate.

1.4.3. EMERGENCY (Handle in Mid Position).

In this position No.1. hydraulic system fluid pressure will be cut off at the mechanical selector valve, no pressure is therefore available at the NORMAL relay valve or the two pistons in the EMERGENCY relay valve which oppose the pilots signal when No.1. system pressure is available. Residual hydraulic pressure within these lines is passed back to low pressure return via the mechanical selector valve. With No.1. Hydraulic System pressure cut off from the 'emergency' relay valve pilots signal pressure is allowed to become effective with the No.2 system pressure which is supplied to the 'Emergency' relay at all times.

As footmotor pressure is applied to the rudder pedals the transmission circuit will OPEN a supply line in the EMERGENCY relay valve, allowing hydraulic pressure to pass to the brake units by-passing the anti-skid valves, hence NO ANTI-SKID facilities when No.2. Hydraulic System is utilised for braking.

1.4.4. Parking (Handle in Fully Extended Position).

For this condition No.2. system pressure is used as a servo pressure to operate the 'Parking' pistons in the emergency relay, operating the relay valve applying the brakes, which are non-differential and non-progressive and by-pass the anti-skid.

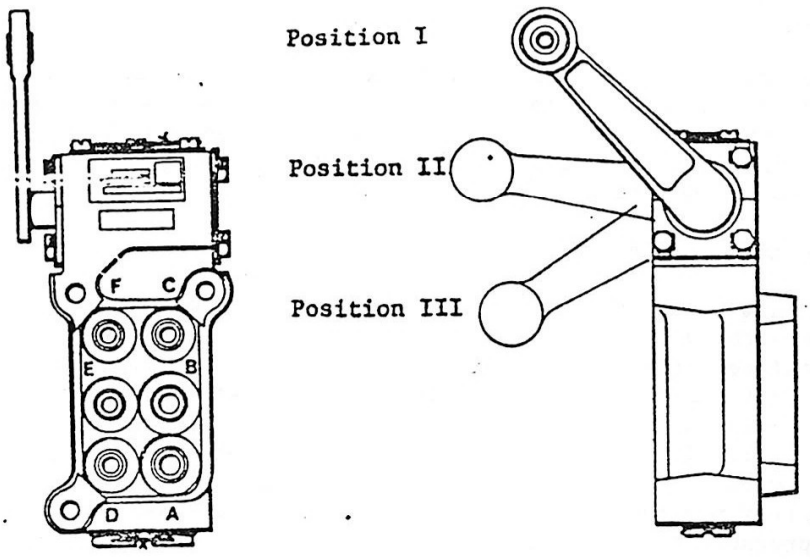

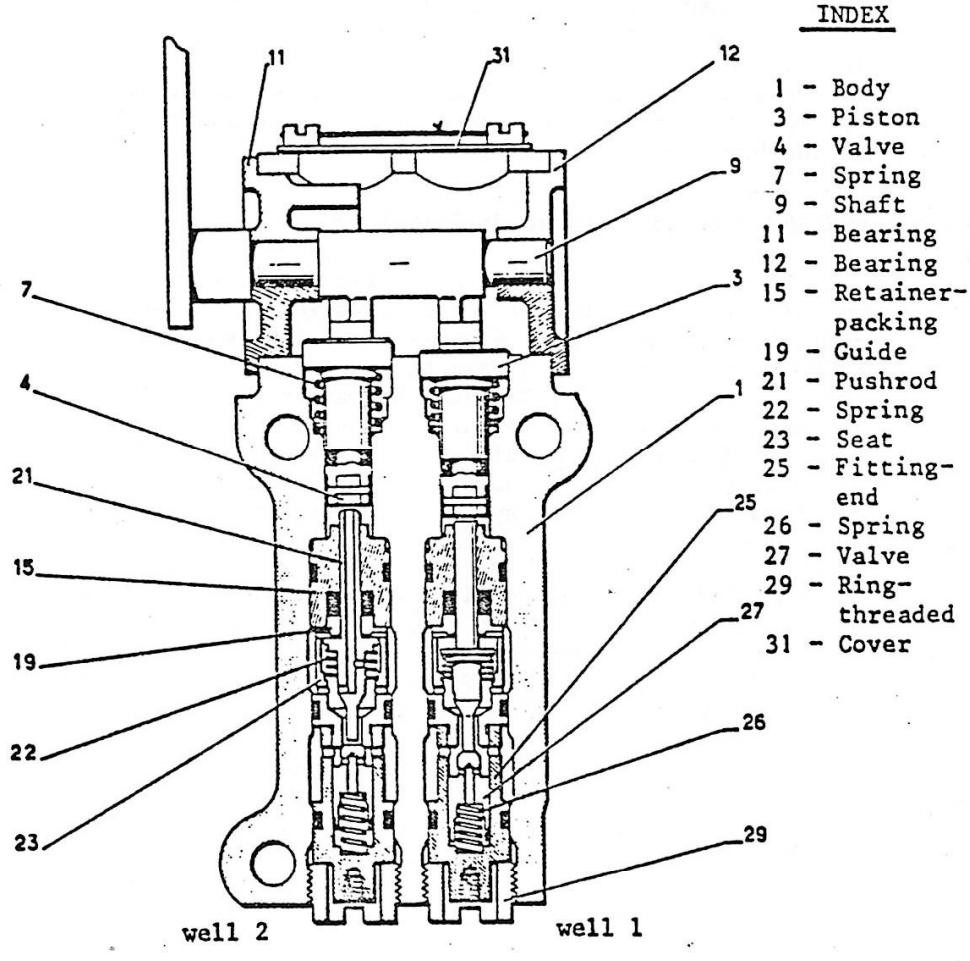

INDEX

1 - Body
3 - Piston
4 - Valve
7 - Spring
9 - Shaft
11 - Bearing
12 - Bearing
15 - Retainer-packing
19 - Guide
21 - Pushrod
22 - Spring
23 - Seat
25 - Fitting-end
26 - Spring
27 - Valve
29 - Ring-threaded
31 - Cover

FIG. 5. MECHANICAL SELECTOR-SECTIONED VIEW

2. SYSTEM COMPONENTS.

2.1. Mechanical Selector.

2.1.1. Introduction.

This mechanical selector valve is a three position selector capable of directing No.1. Hydraulic System and/or No.2. Hydraulic System pressure into the braking system and in certain configurations directing return fluid back into the low pressure return lines to either system reservoir.

Selection of the appropriate hydraulic system for brake utilisation is performed by manual operation of a control lever by a teleflex control circuit.

When the control lever is in the intermediate position the unit is isolated from both hydraulic systems.

2.1.2. Description. (FIG 5)

The brake circuit selector consists of a body (1) featuring two identical main bores.

Each bore comprises the following items:-

The piston (3) with the return spring (7) and the valve (4).

The packing retainer (15) with the guide (19).

The pushrod (21) subjected to the action of the spring (22) which bears against the seat (23).

The valve (27) and its return spring (26)

The bore is blanked by the end fitting (25) which is secured by the ring (29)

The body (1) incorporates a boss which contains the supply ports A-D, service ports B-E and return ports C-F.

Internal drillings ensure communication between the various ports according to the position of the pistons (3).

The shaft (9), which is held by bearings (11) and (12), controls the motion of the pistons (3).

Three 6.5 mm dia. holes drilled in the body allow insertion of the bolts securing the selector to the aircraft structure.

The cover (31), attached by these screws, closes the upper part of the unit body.

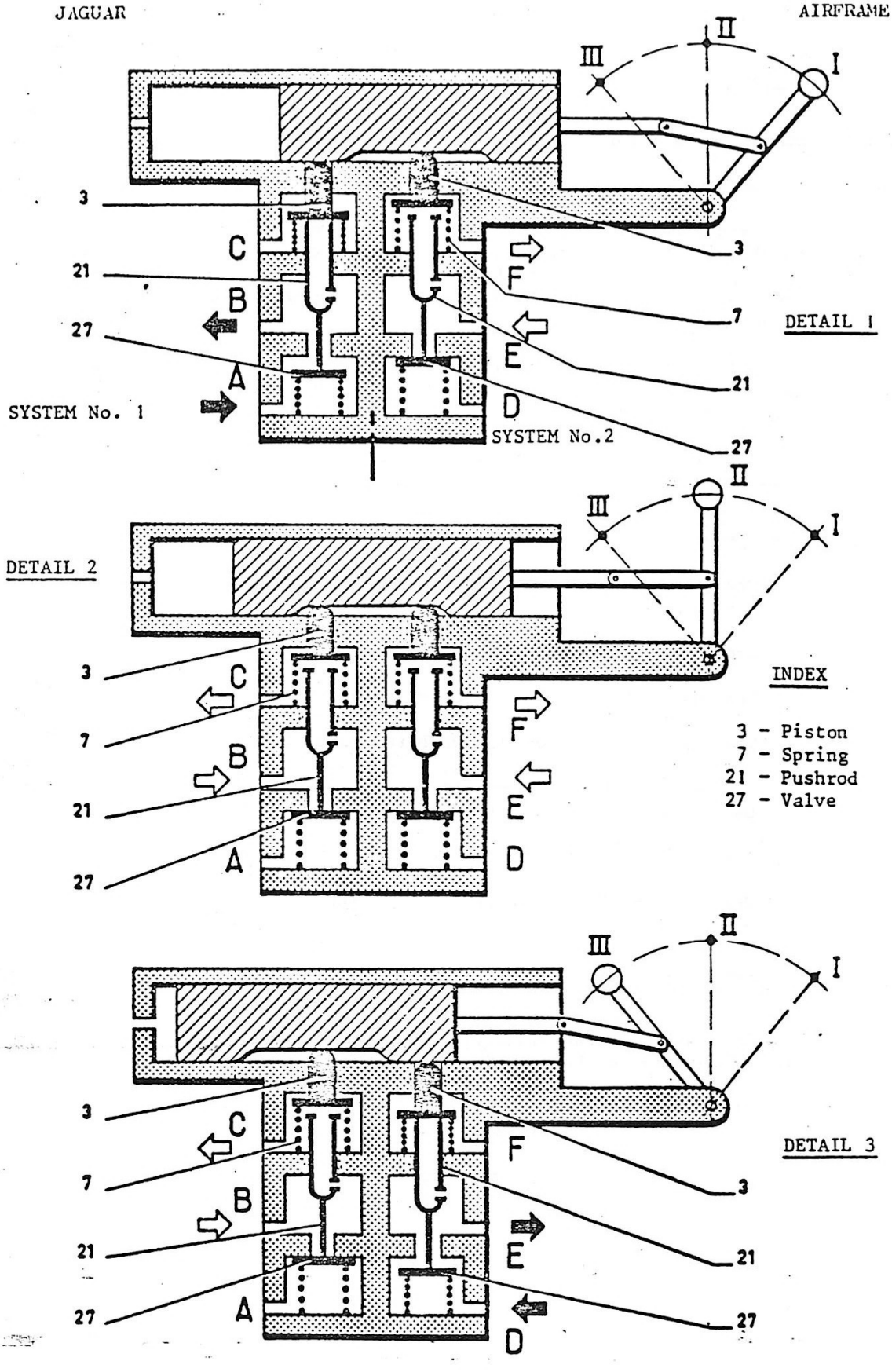

FIG. 6. MECHANICAL SELECTOR-FUNCTIONAL DIAGRAM.

1.4. Operation.

1.4.1. System Selection.

The braking system must be selected by the selector handle situated in the cockpit, to either NORMAL, EMERGENCY or PARKING, depending upon the configuration required. Movement of the selector handle operates a mechanical selector valve via a teleflex control to the desired position.

1.4.2. NORMAL (Handle Fully IN).

In this position the NORMAL and EMERGENCY brake relay valves are supplied with hydraulic pressure from No.1.HYDRAULIC SYSTEM via the mechanical selector valve. Hydraulic pressure at 3,000 p.s.i. will be felt at ports in the NORMAL selector valve but will not pass through until the transmission circuit is operated. The same hydraulic pressure will alo be felt in two ports in the EMERGENCY relay valve which acts on the two pistons, which oppose the pilots signal pressure, whereby making the emergency relay inoperative whilst No.1. system pressure is available.

As footmotor pressure is applied to the rudder pedals the transmission circuit will OPEN a supply line in the NORMAL relay valve, allowing hydraulic pressure to pass via an anti-skid control valve into the brake units. By releasing the footmotor pressure the transmission pressure will decrease to zero allowing all hydraulic pressure to the brake units to dissipate.

1.4.3. EMERGENCY (Handle in Mid Position).

In this position No.1. hydraulic system fluid pressure will be cut off at the mechanical selector valve, no pressure is therefore available at the NORMAL relay valve or the two pistons in the EMERGENCY relay valve which oppose the pilots signal when No.1. system pressure is available. Residual hydraulic pressure within these lines is passed back to low pressure return via the mechanical selector valve. With No.1. Hydraulic System pressure cut off from the 'emergency' relay valve pilots signal pressure is allowed to become effective with the No.2 system pressure which is supplied to the 'Emergency' relay at all times.

As footmotor pressure is applied to the rudder pedals the transmission circuit will OPEN a supply line in the EMERGENCY relay valve, allowing hydraulic pressure to pass to the brake units by-passing the anti-skid valves, hence NO ANTI-SKID facilities when No.2. Hydraulic System is utilised for braking.

1.4.4. Parking (Handle in Fully Extended Position).

For this condition No.2. system pressure is used as a servo pressure to operate the 'Parking' pistons in the emergency relay, operating the relay valve applying the brakes, which are non-differential and non-progressive and by-pass the anti-skid.

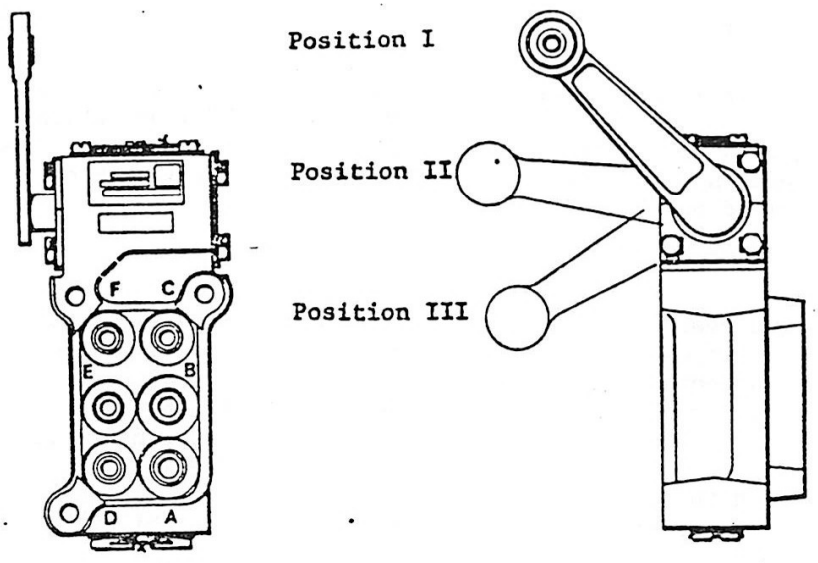

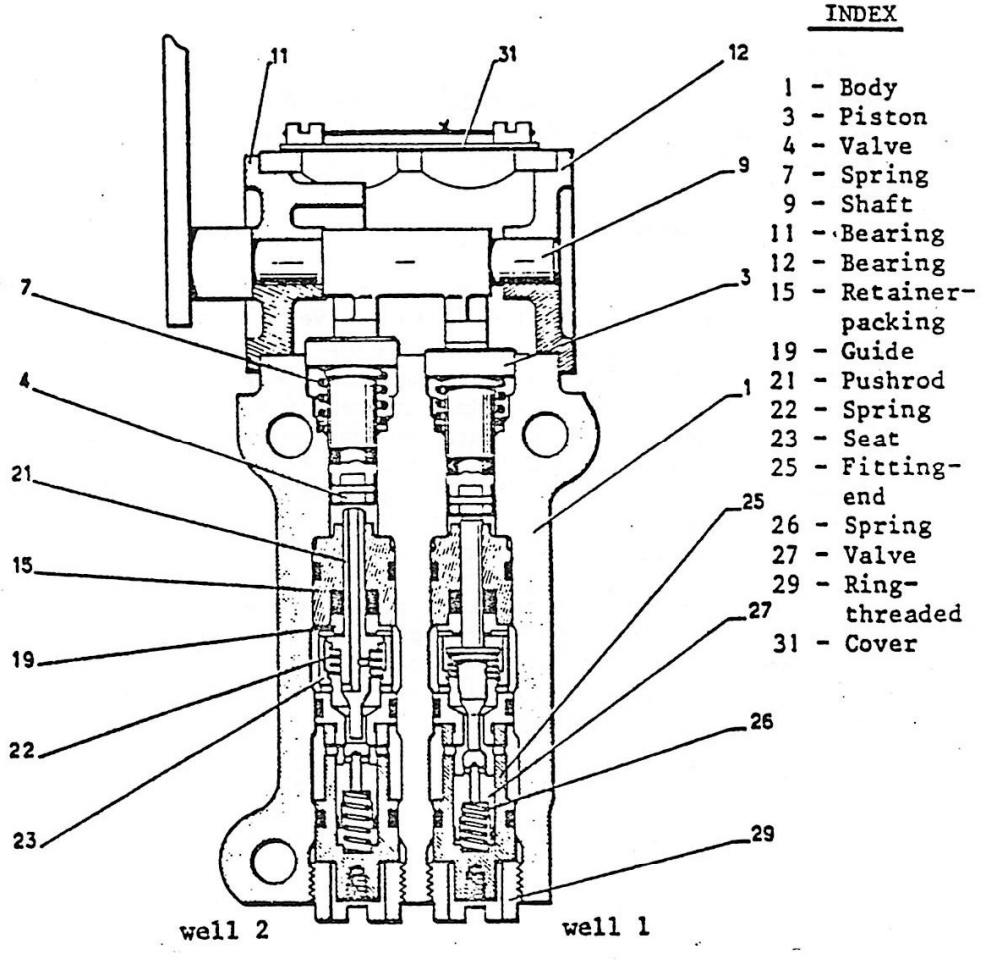

FIG. 5. MECHANICAL SELECTOR-SECTIONED VIEW

2.1.3. Operation.

Lever on position 1. (FIG 6).

System No.1. bore:

The piston (3) is actuated by its cam. Its motion actuates the pushrod (21) and the valve (27). The flow is opened between ports A and B and is closed between the service port B and the return port C.

The ancillary system is supplied by the generating system No.1.

System No.2. bore:

The piston (3) is not actuated by its cam and is held in high position by its return spring (7). The pushrod (21) affords free communication between the service port E and the return port F.

The valve (27) is blanked off, thus isolating the unit from the generating system No.2 connected to port D.

Lever on position II (FIG 6).

The pistons (3) are not actuated by their cams and are held in high position by their return springs (7). The pushrod (21) affords free communication between ports B and C on one hand and E and F on the other. Neither the generating system No.1 nor No.2 can supply the ancillary system.

Lever on position III. (FIG 6).

System No.1. bore:

The piston (3) is not actuated by its cam and is held in high position by its return spring (7). The pushrod (21) affords free communication between ports B and C.

The valve (27) is closed and thus isolates the supply of system No.1. connected to port A.

System No.2 bore:

The piston (3) is actuated by its cam, as it turns it actuates the pushrod (21). The valve (27) opens, thus allowing supply to the ancillary system connected to E by the generating system No.2. connected to D.

The pushrod (21) being held against the piston (3), isolates the port E from the port F thus preventing the fluid from returning to the reservoir.

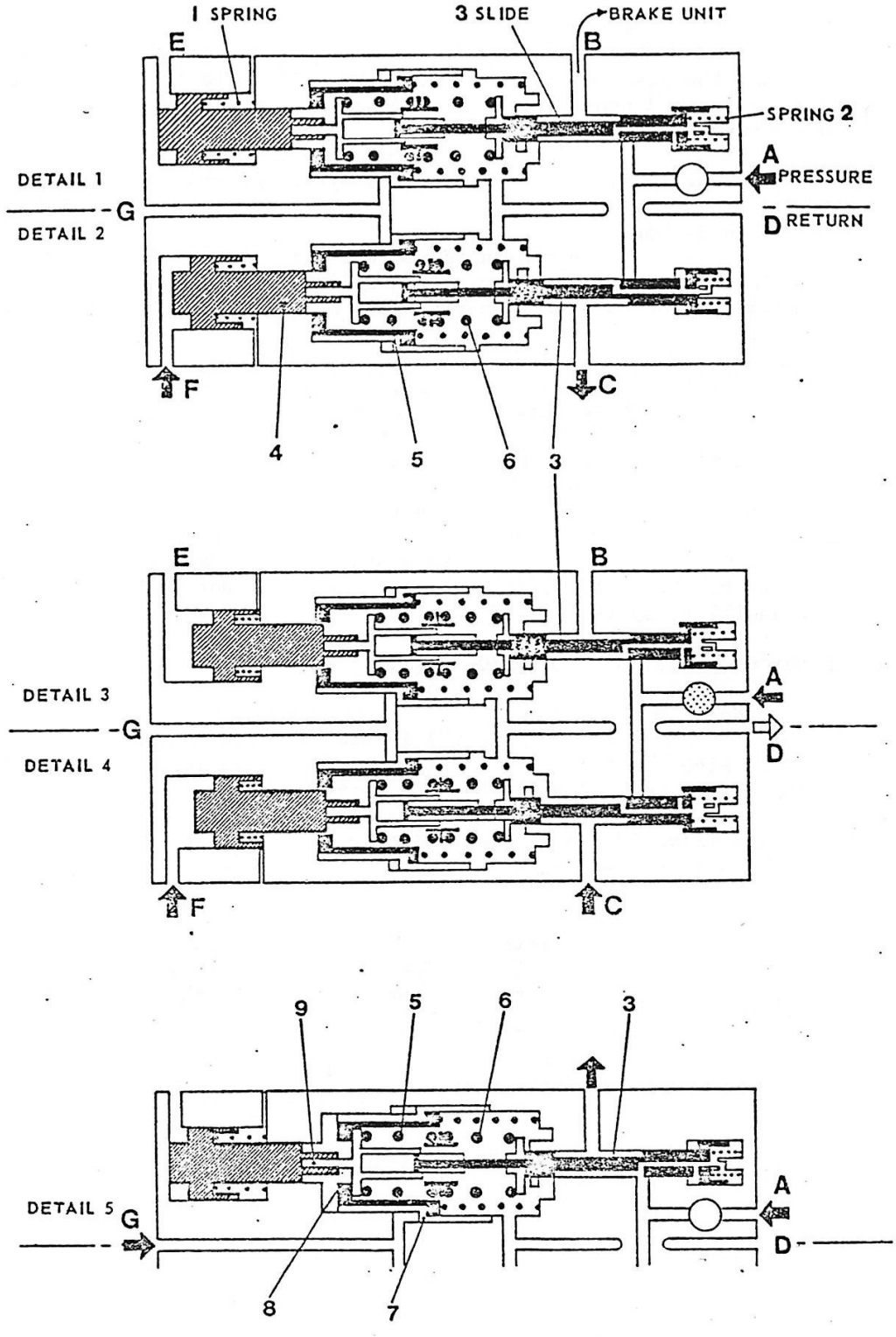

FIG. 7. NORMAL RELAY VALVE-FUNCTIONAL DIAGRAM.

2.2. Normal Brake Relay Valve.

2.2.1. Introduction and Description.

This relay valve located in the nose undercarriage bay is an hydraulically controlled unit which enables the use of low control pressures to convey higher operating pressures to a maximum valve of 2250 p.s.i. into the brake units. It is so designed to allow differential and progressive braking, dependant upon the operators requirement, by varying the pressure applied to the operating low pressure control circuit. It is supplied with fluid at 3,000 p.s.i. from No.1. Hydraulic System only.

2.2.2. Operation.

Static Position:

Under the action of the springs 1 and 2, the slide 3 is held in such a position that it allows communication between port B and return circuit D. The supply circuit A is isolated.

Normal Braking:

The hydraulic pressure admitted through the port F acts on the piston (4) whose displacement is transmitted to the slide (3) by means of the springs (5 and 6. The result of this displacement is, first of all, to stop the communication between the service circuit C and the return circuit D, and to progressively put this service circuit into communication with the supply circuit A. The slide displacement is limited by a mechanical stop.

The proportionality between the reduced pressure in C and the control pressure generated in F is ensured by the reaction of the reduced pressure on the rear face of the slide 3.

To each pressure generated by the braking control, corresponds a crushing of the spring assembly (springs 5 and 6 and a position of the slide 3 such that the reduced pressure in C balances the increase of effort of the spring assembly by action on the slide 3.

Stabilized Braking:

When the brakes are applied, the pressure behind the slide 3 increases and causes return of the latter.

The service port B is then isolated both from the return circuit D and from the supply A. This position of the slide 3 remains stable as long as the control pressure applied in E does not vary..

Automatic Braking:

The pressure admitted in the circuit connected in G controls the displacement of the pistons 7 located in each bore, until mechanical abutment.

In its displacement, the piston 7 actuates the spacer 8 which itself actuates the end piece 9. The displacement of the latter is

2.2.2. (contd).

transmitted to the slide 3 by means of the springs (5 and 6) thus first isolating the return circuit D and then causing communication between the service circuit B and the supply circuit A.

Brakes Release:

When the piston 10 or the piston 7 is no more actuated by hydraulic pressure, all the moving parts are subjected to the action of the return springs and return to their initial position.

2.3. Emergency Brake Relay Valve.

2.3.1. Introduction & Description.

This relay valve also located in the nose undercarriage bay is supplied with hydraulic pressure from both No.1, and No.2. Hydraulic Systems and is used for Emergency Braking should No.1. Hydraulic System pressure fail and parking Emergency and Parking facilities are operative from No.2. Hydraulic System Pressure only.

This unit comprises two circuit selectors which prevent its operation when the normal braking circuit is used. When in operation it ensures supply of high pressures to the brakes by use of low control pressures.

It is so designed to allow differential and progressive braking dependant upon the operators requirements, by varying the pressure applied to the operating low pressure control circuit.

The unit fills three purposes:- (FIG 8).

In 'NORMAL' braking, it prohibits the use of the 'EMERGENCY' braking system.

In 'EMERGENCY' braking, it supplies the brakes with pressures higher than and proportional to the control pressures acting on E, F.

In 'PARKING' brake operation, the pressurization of port G results in the inlet of a preset pressure to the brakes.

2.3.2. Operation.

Since both bores function in the same way, the functioning of one bore only is described.

The 'NORMAL' braking system being considered as unused, the ports J and H are not supplied by the 'HIGH PRESSURE' circuit.

No control pressure is applied to the distributor relay. The ball valve (1) being applied against its seat, it isolates the supply circuit connected to A. The conical valve (2) abuts on its guide thus allowing communication between the service circuit C and the return circuit D.

Emergency Braking.

No hydraulic pressure applied to port H.

Control pressure inlet through port E.

The control pressure admitted through the port E acts on the piston 3 which compresses the springs 4 and 5 which in turn cause displacement of the piston 6. The latter comes into contact with the conical valve 8, thus, in a first step, isolating the service

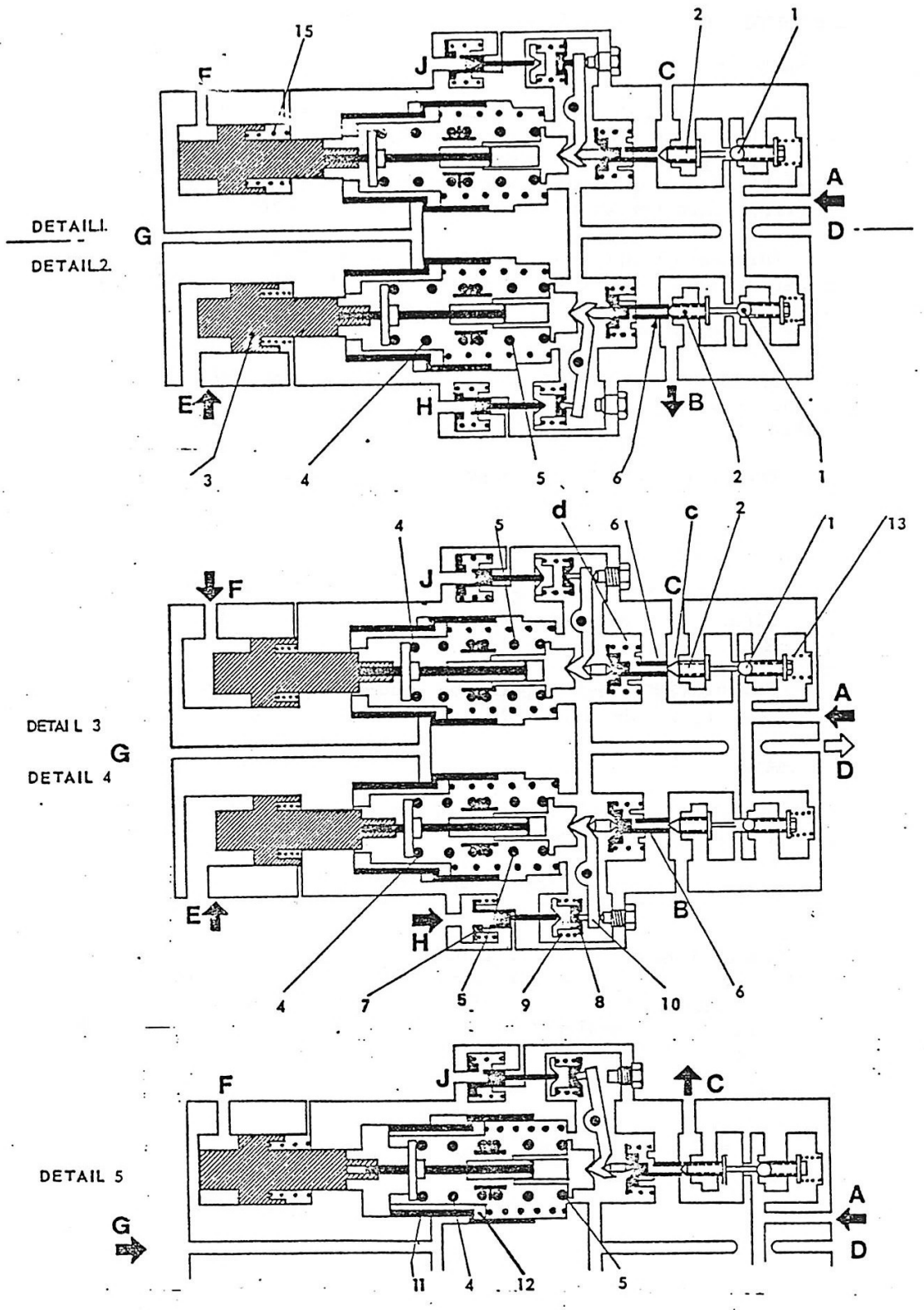

FIG. 8. EMERGENCY BRAKE RELAY VALVE

2.3.2. (contd).

circuit B from the return circuit D.

Resuming its travel, the piston (2) pushes against the conical valve 8 which lifts the ball from its seat; the supply port A communicates with the service circuit B. The travel of the piston 6 is limited by a mechanical stop.

To each pressure generated by the braking control at E corresponds a compression of the springs 4 and 5 and a proportional pressure applied at B.

Stabilized braking:

When the brakes are applied, the hydraulic pressure admitted to the service circuit increases progressively until a pressure at C is obtained. This pressure causes the piston 6 to move backward and consequently results in compression of the springs 4 and 5 until the ball returns against its seat due to the return spring 13.

The new position of the piston 6 keeps the port C isolated from the return D. This position of the piston remains stable as long as the control pressure at F does not vary or as long as there is no overpressure in the service circuit.

Overpressure:

If during the preceding phase a pressure increase occurs in the service circuit (i.e. due to a temperature rise) a new backward motion of the piston 6 will result. The valve 2 retained by its shoulder, will be lifted from its seat and causes communication between ports C and D until a new balance position is obtained.

Operation when the normal braking circuit is used:

The 'NORMAL' braking circuit being considered as operative, ports H and J are supplied by No.1. Hydraulic System Pressure at approximately 3,000 p.s.i.

The piston 7 is displaced by the hydraulic pressure admitted at H, the initial clearance between the piston and the cup 8 is eliminated, and the spring 9 is compressed by a certain value. At the bearing point of the cup (8) the rocker, 10 is subjected to a thrust which is a function of the spring 9. This thrust is transmitted to the springs 4 and 5 which are compressed by the pressure admitted at E by means of the rocker 10. Consequently, the piston 6 only undergoes an effort resulting from the subtraction of the effort due to the rocker 10 from the effort of the control pressure at E. Since the hydraulic pressure at H exceeds that applied to E this effort has a negative value, the service circuit port B remains in communication with the return D.

Pressure at H lower than the maximum control pressure

2.3.2. (contd).

The operation is identical to that previously described, but the reduced pressure at B, instead of being Nil. When the control pressure at E is greater than that at H, there will be an increase in pressure at B due to movement of the rocker beam allowing pressure into the circuit.

Parking Braking:

The hydraulic pressure admitted at G causes the piston 11 to move up to its mechanical stop.

In its motion, the piston actuates the spacer 12 thus causing a certain compression of the springs 4 and 5. This compression value corresponds to the inlet to the services circuit C and hydraulic pressure is directed via the open ball valve and into the brake circuit.

Brake Release:

When no more control pressure is applied to the piston 3 or 11, all the moving parts are subjected to the action of their return springs and return to their rest position, thus isolating the supply A and connecting the service circuits B and C to the return.

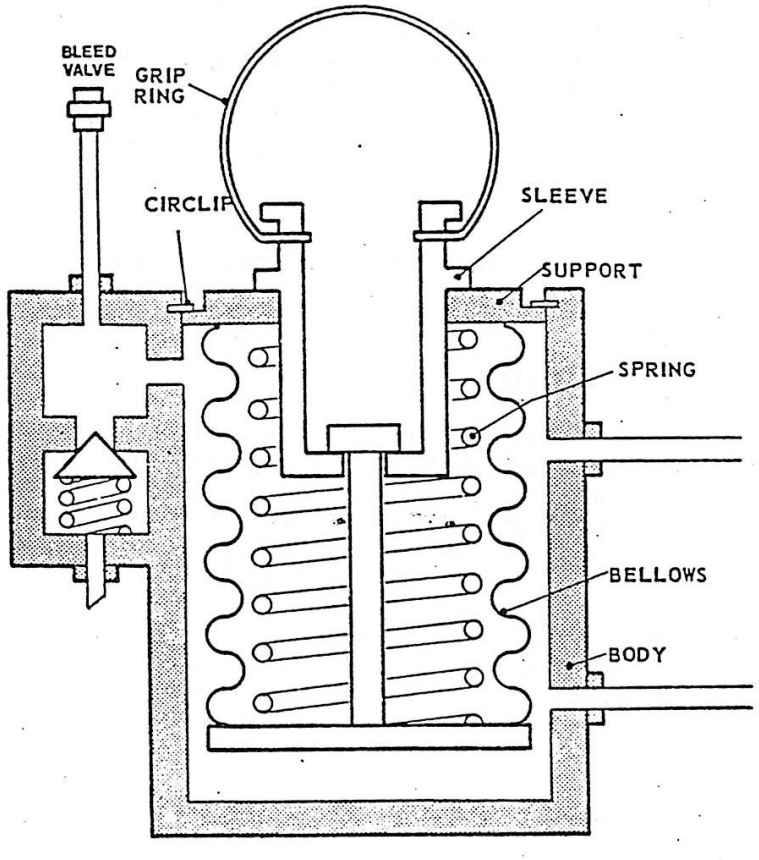

FIG. 9 FOOT MOTOR RESERVOIR.

NOTE:
By comparing the conditions between a full and empty reservoir an estimate can be made as to the level of fluid.

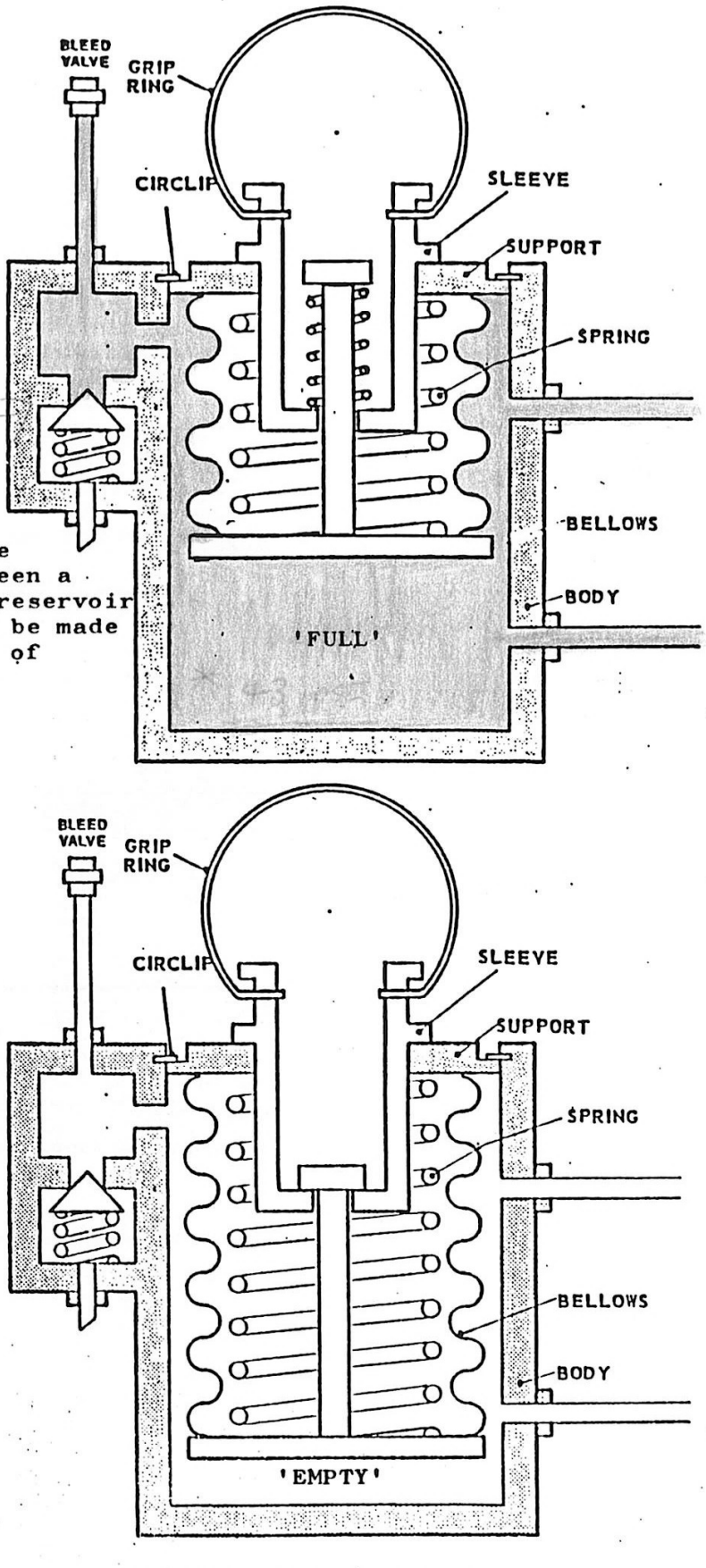

FIG. 9a FOOT MOTOR RESERVOIR.

2.4. Foot Motor Reservoir.

2.4.1. Introduction.

The purpose of the reservoirs is to provide the brake relay valve with a separate supply of fluid independent of the hydraulic systems.

The reservoirs are also used to maintain a certain amount of pressure in the circuit, and they provide a back up reserve of liquid in case of seepage in the lines or leakages.

A reservoir is attached to the structure inside the cockpit fuselage Port and Starboard side and is located above the brake foot motor behind each rudder pedal.

2,4.2. Description.

The reservoir is composed of a cup shaped body according to right or left side. Inside the body is a moulded bellows, a support and its guide which is held in place by a circlip ring.

The bellows and the spring constitutes an elastic unit compressing or expanding itself under pressure variations inside the reservoir.

2.4.3. Operation.

In order for the brake foot motor valve to operate as a solid line, no drop in pressure is allowed between the pressure on the pedals and the pressure transmitted to the brake relay.

In case of pressure differential due to heat or cold expanding or contracting the liquid, the reservoir compensates the differences in liquid when in circulation with the circuit.

In normal situation, the reservoirs and the circuit are filled with liquid at a pressure below 3 bars (43 PSI) just sufficient to partially compress the bellows. Thus, any changes in pressure when the circuit is open is compensated for the increase in volume by acting on the bellows against the spring, and for decrease in volume by allowing the bellows to expand with the spring.

If accidentally the pressure inside the circuit exceeds 3 bars (47 PSI), the safety bleed valve comes into action. IN COCKPIT.

Too high a pressure in the reservoir is relieved by the pressure relief valve situated on the side of the unit, which vents excess fluid on the cockpit floor **

When the pressure in the reservoir drops below 3 bars the relief valve re-seats.

** This can be avoided during replenishment by relieving bellows pressure.

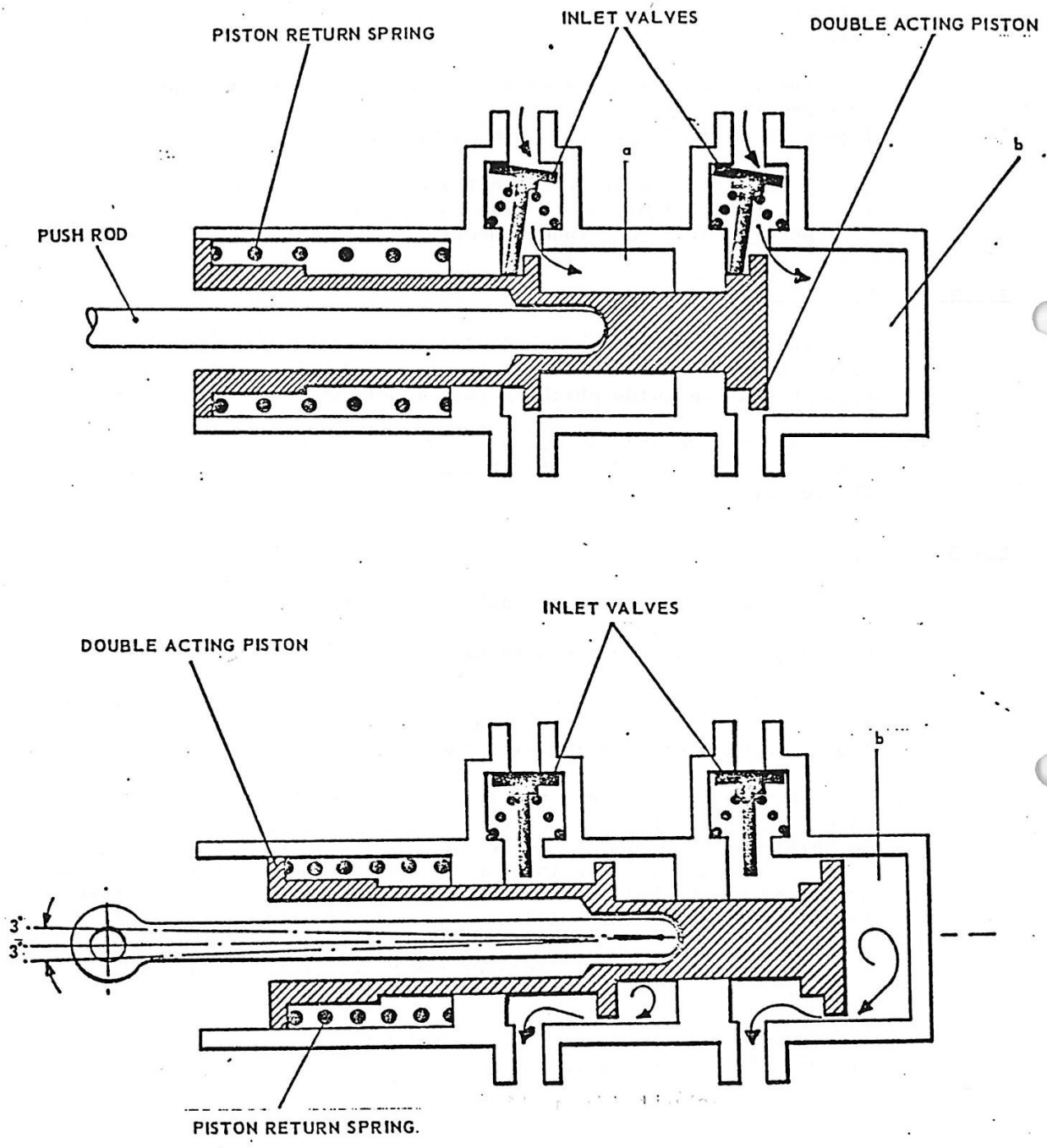

FIG. 10 FOOT MOTOR.

2.5. Foot Motor.

2.5.1. Introduction.

The purpose of the foot motor pressure transmitter is to transfer the pressure applied by the pilot on the pedals to the brake control relay valves, (emergency and normal). Thus delivering the hydraulic pressure to the control valve according to the pilot's action.

The foot pressure transmitters are located behind each pedal and its rod end is linked to the pedal by a bell crank and rod syetm.

2.5.2. Description.

The foot motor pressure transmitters consist of two bodies bolted together to form one unit. The unit supplies fluid to pressurise both the NORMAL and EMERGENCY brake relay valves.

On the side of this unit protrudes two inlet/outlet ports serving to connect the transmitter to hydraulic lines. Port 'A' and 'C' connects the transmitter to the brake foot moyor reservoirs. Serving both NORMAL and EMERGENCY brake relay valves and ports B and D connect to the Normal Relay Valve and Emergency Relay Valve.

2.5.3. Operation. (FIG 10).

The foot pedal transmitter is connected to the brake control valve by hydraulic pipe line. It is filled by liquid having little or no pressure.

When the push rod is not activated by the pedals, the two inlet valves are opened by the shoulders of the operating piston which is held back by a return spring and both chambers are kept in communication with the reservoirs. This means a liquid loop is established and the line is not pressurized, such as outlet ports 'B' and 'D' connected to the brake relay valves.

When the pilot depresses the brake pedals, the push rod moves the piston, compressing the return spring and the operating pistons shoulder frees the inlet valve rods, causing the spring loaded inlet valves to seat back on the inlet ports'A' and 'C' sealing off the communication between the reservoir and the chamber (a) and (b).

The double operating piston advancing in the chambers compresses the liquid forcing it to discharge through outlet ports 'B' and 'D' pressurizing the line up stream of the brake control relay valve.

The pressure transmitted thus is equivalent to that of the pressure enduced by the pilot on the pedals. In other words, this system acts as an hydraulic transmission from pedals to brake control valve.

2.6. Accumulator.

The accumulator is fitted to provide limited operations of the brakes for parking and Ground Handling. It is fitted into the pressure supply line from No.2 system, and when fully charged to 3000 p.s.i allows approximately nine full applications of the brakes before hydraulic re-charging is required. The gas side of the internal seperator piston chamber is charged with NITROGEN to a pressure of 1500 p.s.i. through an external charging valve located on the STARBOARD side box structure of the nose undercarriage compartment, whilst its associated pressure gauge is visible through a transparent window in access panel No.15. The gas side of the accumulator is lubricated with O.M. 15 hydraulic fluid and replenishing this amount of lubricating fluid to its correct level can only be achieved by removing the unit from the aircraft.

2.7. Non-Return Valves.

Three Non-Return valves are fitted in the brake control circuit which are described fully in Chapter 1 Paragraph 4.18. Two protect the circuits from back pressures within the return to reservoir lines of both No.1 and 2 hydraulic systems. The third ensures on hydraulic system shut down, that 3,000 p.s.i. system pressure of No.2. hydraulic system is trapped in the brake circuit which can be utilised for servicing operations.

2.8. Pressure Relief Valve.

A pressure relief valve fitted in No.2. hydraulic system prevents over pressurisation of fluid trapped in the system accumulator circuit, and allows excessive pressures to be relieved to low pressure return.

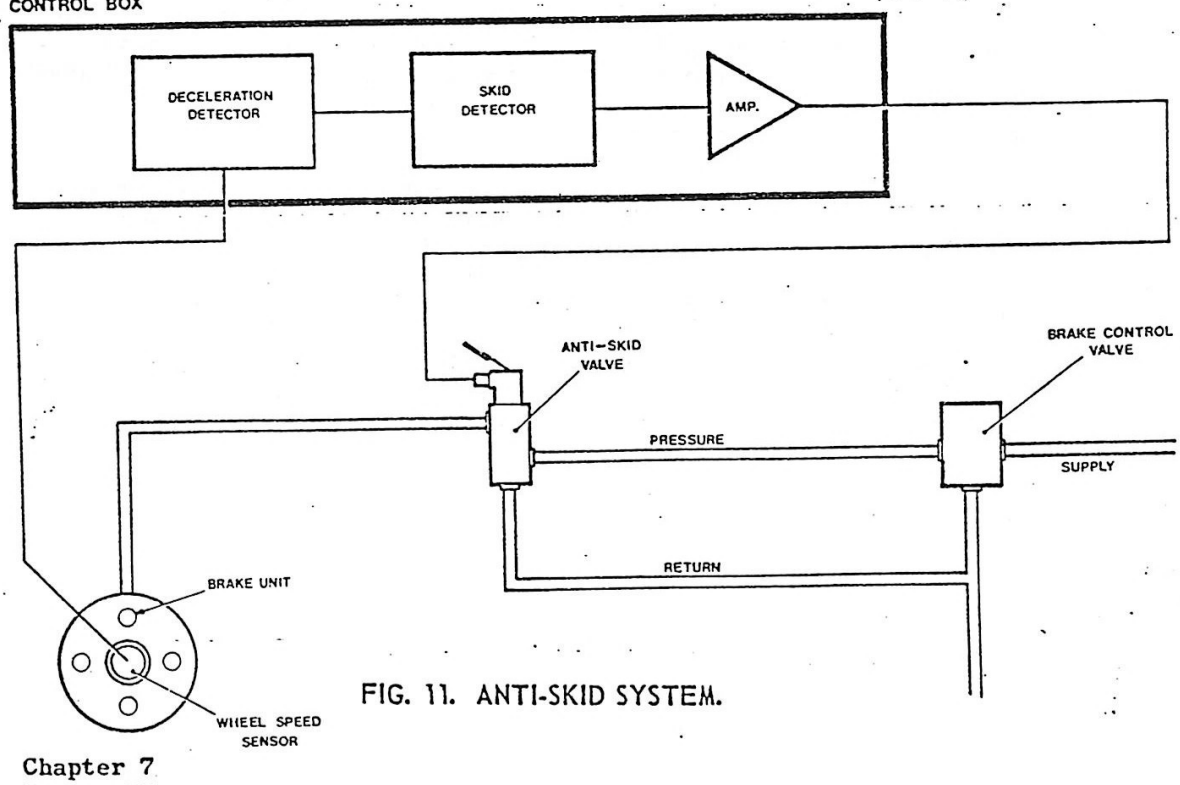

FIG. 11. ANTI-SKID SYSTEM.

3. ANTI-SKID CONTROL.

3.1. Introduction.

The 'Jaguar' anti-skid system, developed by Goodyear, prevents damaging skids, and ensures an absolute minimum of tyre wear by close control of brake pressure whenever a skid is incipient.

3.2. Description.

The anti-skid system is a tacho-generator type consisting of a wheel-driven speed sensor and a solenoid-operated dump valve for each wheel, plus two control boxes, one for the outboard wheels and one for the inboard. The system is powered from the 28V d.c. emergency busbar by two fuse-protected circuits, each of which supplies one control box. The system is entirely automatic in operation.

The dump valves are each positioned in the normal brake line immediately upstream of the wheelbrake unit. When de-energised, the pressure inlet port to the valve and thence the brakes, is open; when energised, the slide valve shuts off the pressure inlet port and opens the wheelbrake port to return; pressure at the brakes is thus dumped.

The wheel speed sensors, each a DC generator, are mounted on the mainwheel axles and supply the control box with a DC voltage proportional to wheel rotation speed. The control box circuit comprises three basic components; a deceleration detector, a skid detector, and an amplifier (a separate circuit is provided for each set of brakes). If the output of the deceleration detector shows a deceleration greater than 31 feet per sec ^{2}, the skid detector supplies a signal to the amplifier which, in turn, applies power to the solenoid of the dump valve, and that particular brake is released momentarily until wheel spin-up and deceleration return to normal. The solenoid is then de-energised and braking of the wheel is re-applied.

Routed individually via the Port and Starboard undercarriage Down Lock microswitches, the two power circuits are de-energised while the landing gear is retracted. Touchdown protection is provided by the compression microswitches; the dump valves are energised (brakes off) when the U/C locks down, and remain so until touchdown; they are then de-energised by compression of the oleo legs to permit braking after the wheels commence rolling; the wheel speed sensors then assume control. The circuit is so designed that speed sensor spin-up overrides a failure of the leg oleo microswitch; additionally, should a dump valve remain energised for more than approximately two seconds, a fail safe circuit removes power from the respective control box, resulting in anti-skid control being withheld from that pair of wheels.

The antiskid system is automatically isolated at speeds below 20 knots. allowing the aircraft to arrive at a complete stop and park without the brakes being automatically released.

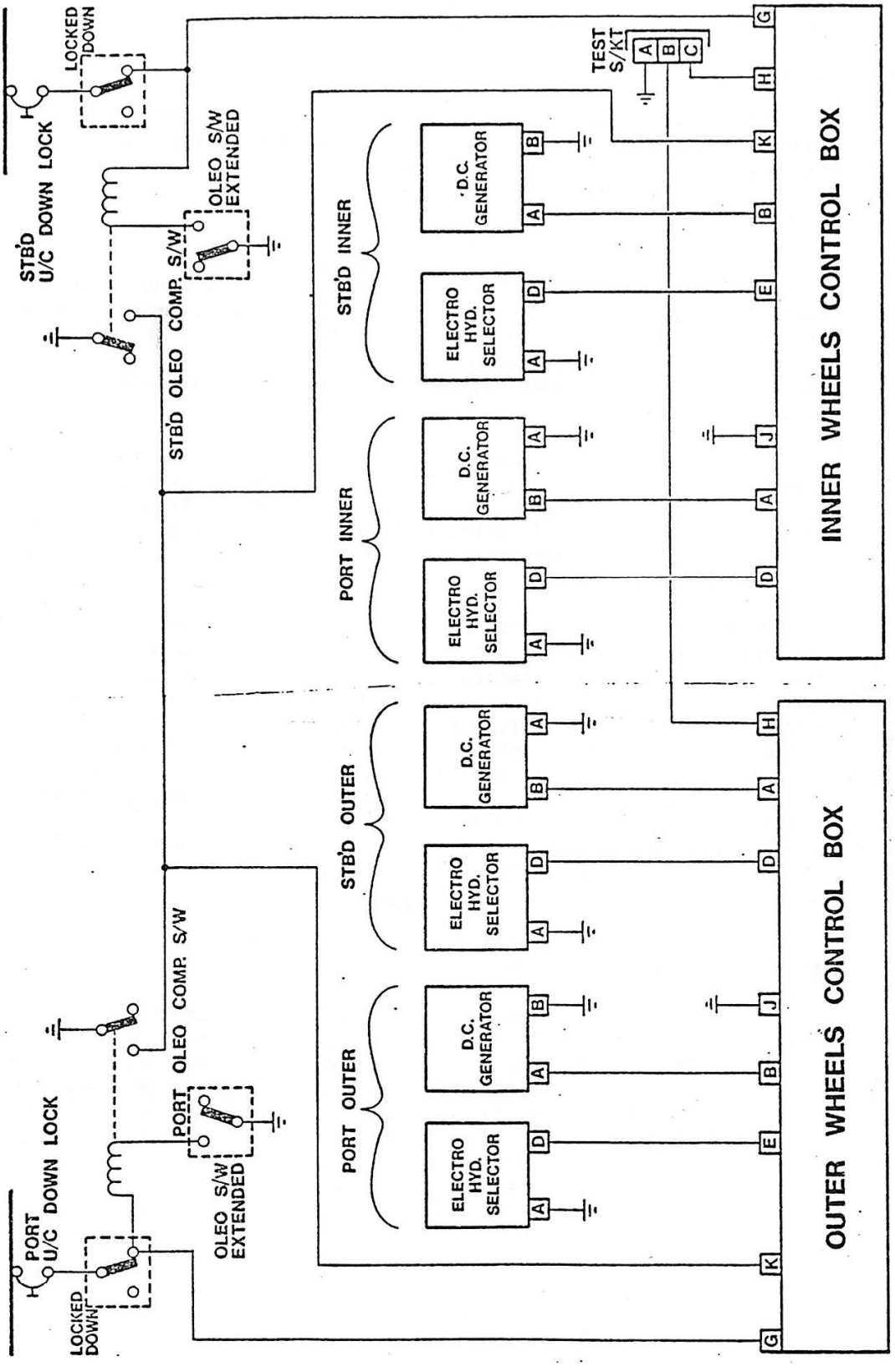

FIG. 12. ANTI-SKID SYSTEM.

3.3. Operation.

The wheel speed sensor provides a D.C. voltage proportional to wheel rotational speed. The D.C. signal is fed to the control box where it is processed by the Deceleration Detector Unit. The deceleration detector output is proportional to the deceleration of the wheel, whether it is a slow deceleration of a lightly braked stop or the high deceleration of an incipient skid.

Until wheel decelerations of greater than 31 ft/sec/sec occur, the output of the deceleration detector is to low to turn on the skid detector. At a deceleration of 31 ft/sec/sec however, the skid detector abruptly sends a skid signal to the amplifier. This circuit amplifies the skid signal to operate the anti-skid valve which quickly dumps brake pressure for the duration of the skid. When the wheel recovers to normal speed, the valve is de-energised and brake pressure is re-applied.

If momentary conditions cause a wheel to stop, brake pressure will be dumped and held off, for a time duration that depends upon the speed of the wheel just before the stopping. The hold-off time is adequate for even the worst runway conditions.

Brakes cannot be applied until the main oleo compression micro-switches are made. The whole system is de-energised whilst the undercarriage is retracted.

4. ANTI-SKID SYSTEM COMPONENTS.

4.1. Control Valves.

4.1.1. Description and Operation.

The control valve is a three-way, solenoid operated, two-positioned type, normally closed to return.

Energising the solenoid will force the piston to the right and close off the supply pressure to open the brake port to return.

4.2. Control Box.

4.2.1. Description.

The control box is an electrically operated unit. The electronic components are arranged according to function and mounted on printed Circuit Boards.

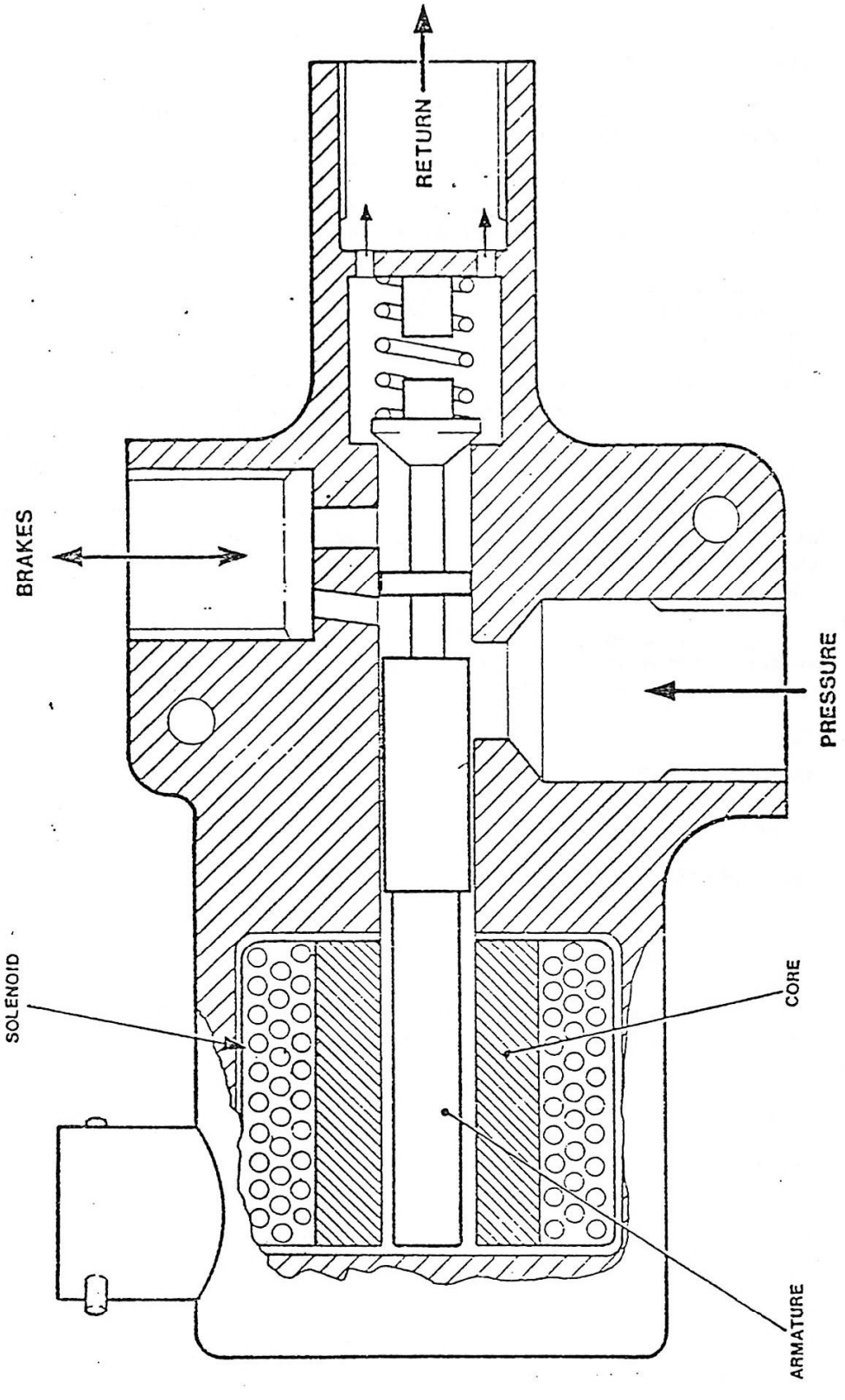

FIG. 13 ANTI-SKID CONTROL VALVE.

CHAPTER. 8

IN FLIGHT REFUEL PROBE.

CHAPTER. 8.

CONTENTS.

1. IN FLIGHT REFUEL PROBE.
1.1. INTRODUCTION.
1.2. DESCRIPTION.
1.3. OPERATION.

2. SYSTEM COMPONENTS (Hydraulic).
2.1. ELECTRO/HYDRAULIC SELECTOR.
2.2. I.F.R. PROBE OPERATING JACK.
2.3. TWO WAY/FIXED ORIFICE RESTRICTOR.
2.4. NON-RETURN VALVE.

3. SYSTEM COMPONENTS (Electrical).
3.1. DOOR ACTUATOR.
3.2. MICROSWITCHES.

LIST OF ILLUSTRAIONS.

FIG.1. FLIGHT REFUELLING PROBE.
FIG.2. HYDRAULIC CIRCUIT.
FIG.3. CONTROLS & INDICATIONS.
FIG.4. PROBE POSITION CONTROL ELECTRICAL CIRCUIT.
FIG.5. ELECTRO HYDRAULIC SELECTOR.
FIG.6. ELECTRO. HYD. SELECTOR.
FIG.7. I.F.R. PROBE OPERATING JACK.

CHAPTER 8

1. INFLIGHT REFUEL PROBE.

1.1. Introduction.

Flight refuelling of the Jaguar is effected through a hydraulically operated retractable refuelling probe. This unit is located on the STARBOARD side of the nose fuselage directly forward of the pilots position at FRAME 8. The probe is housed in a recess in the side of the fuselage which is enclosed by an electrically operated door and an upper fairing attached to the probe arm.

The door is independently operated by an electrical actuator and is closed when the probe is fully extended to maintain aerodynamic airflow over the fuselage.

The probe configuration is shown in FIG 1 with the hinge at the upper end, this hinge being a swivel pipe connection through which fuel passes during 'in flight refuelling' operations.

1.2. Description.

Hydraulic power for extending and retracting the probe is supplied from No.1. HYDRAULIC SYSTEM. In an EMERGENCY the probe can be EXTENDED ONLY, hydraulic power being supplied from No.2. HYDRAULIC SYSTEM.

The probe is operated by an hydraulic jack, the direction of which is controlled by an electro-hydraulic selector valve. This is energised by a rotary selector switch located on the STARBOARD side of the instrument panel.

Pre-MOD 567 is a THREE position switch.

NORMAL
IN
EMERGENCY

Post-MOD 567 is a FOUR position switch.

REFUEL
OUT
IN
EMERGENCY

An indicator lamp located on the STARBOARD side of the instrument panel when lit gives a RED 'probe in motion' indication.

DOORS CLOSING & OPENING ONLY

Directly above the 'probe in motion lamp' is another indicator lamp, which is green when illuminated, indicating ready for refuelling. The probe is mechanically Locked Out.

GREEN: READY FOR REFUELING

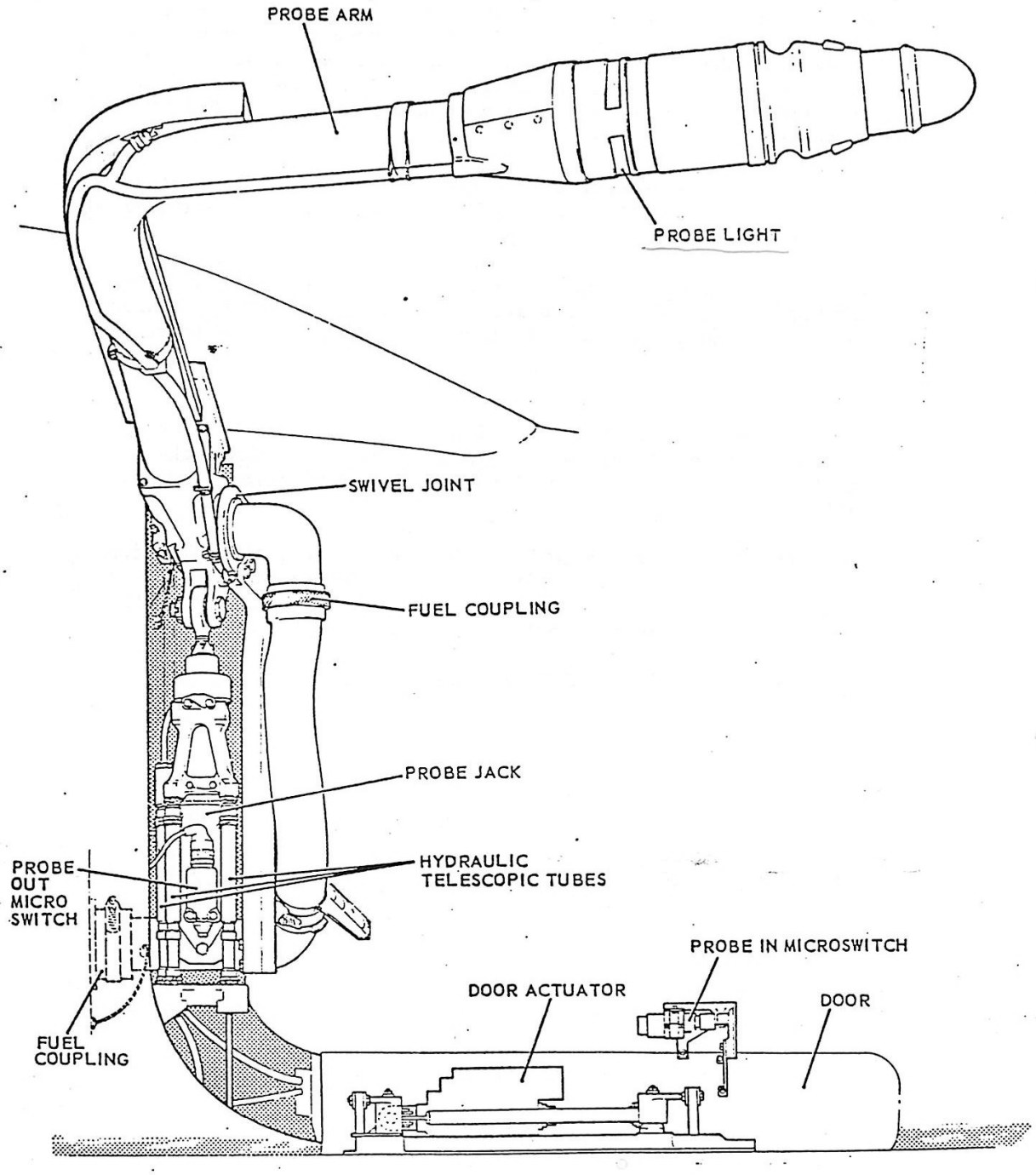

FIG.1. FLIGHT REFUELLING PROBE.

1.3. Operation.

1.3.1. Refuel (or Normal pre-MOD 567) selection.

When the FLIGHT REFUELLING selector switch in the cockpit is set to the NORMAL (or REFUEL post-MOD 567) position an electrical supply is made available to the probe door actuator. The door actuator motor will run - extending the actuator ram, this also lights the RED 'PROBE IN MOTION' indicator lamp.

As the door actuator ram fully extends its internal limit switches operate, this will:-

Cut off electrical supply to the actuator, and cause the actuator to STOP.

Energise the OUT side of the Normal Hydraulic Selector Valve.

The selector valve allows hydraulic pressure to the probe jack. When hydraulic pressure fluid enters the probe jack retraction of the jack ram will commence. As the jack ram fully retracts it will move the IN FLIGHT REFUEL PROBE to the 'OUT' position, the final movement of the jack ram will engage internal claw locks locking the Probe in the OUT position. With the claw locks engaged a microswitch on the jack body is operated which will:-

De-energised the Hydraulic Selector Valve which will revert to NEUTRAL

Allows an electrical supply to motor the probe door actuator ram to the CLOSED position.

As the door actuator ram reaches the end of its travel the internal limit switches of the actuator makes to break the electrical circuit to both:-

The Door actuator ram, which will stop.

The 'PROBE IN MOTION' indicator lamp, which will be extinguished.

At the same time an electrical supply will be available to light the 'GREEN' ready for refuelling indicator lamp.

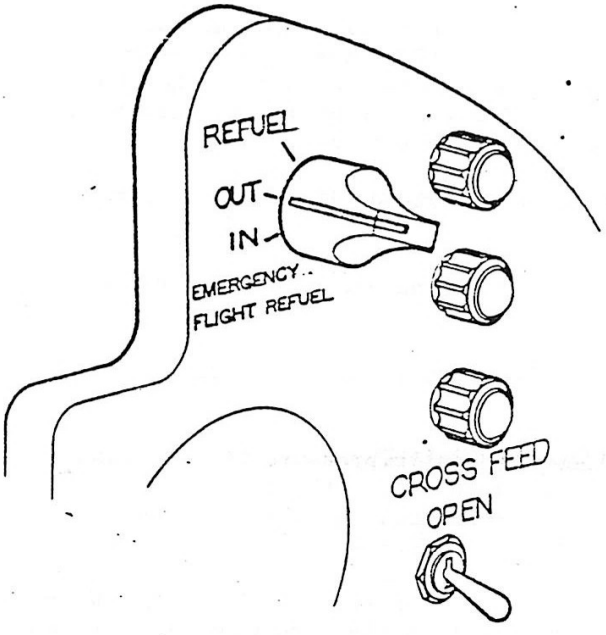

FIG. 3 CONTROLS AND INDICATORS.

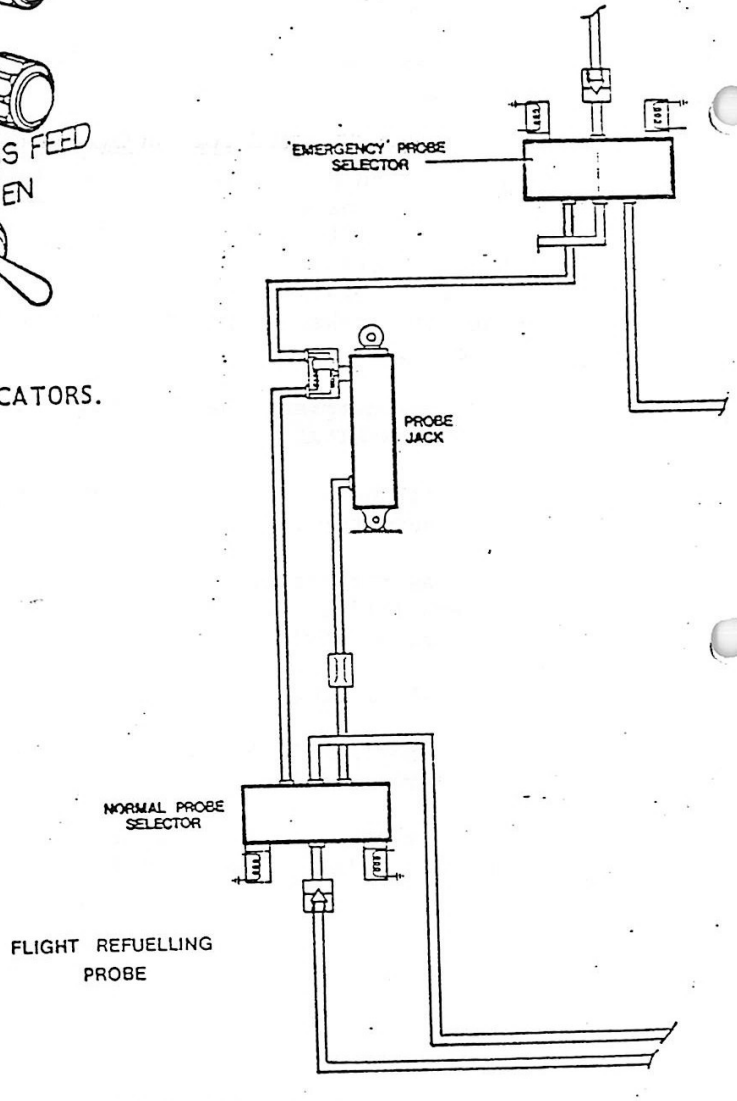

FIG. 2 HYDRAULIC CIRCUIT.

1.3.2. In Selection.

When the Flight Refuelling selector switch is set to the 'IN POSITION' an electrical supply is made available to the probe door actuator. The door actuator motor will run which in turn extends the actuator ram. As the actuator ram extends and the probe door opens, the GREEN ready for refuelling light will be extinguish and the RED 'probe in motion' indicator lamp lights.

As the door actuator ram fully extends its internal limit switches operate. This will cut off the electrical supply to the probe door actuator and stop the actuator, it also energises the 'IN' side of the Normal Hydraulic Selector Valve.

The selector valve allows hydraulic pressure to the probe jack As hydraulic pressure fluid enters the probe jack it will firstly UNLOCK the locking claws and finally extend the jack ram.

When the probe reaches the fully stowed position it comes intc contact with the 'PROBE IN' microswitch which de-energises the selector valve which reverts to neutral. At the same time allows an electrical supply to motor the probe door actuator ram to the CLOSED position. As the internal limit switches in the actuator make the electrical power supply to the actuator is broken which stops the probe door actuator ram from moving any further and extinguishes the 'PROBE IN MOTION' RED light.

1.3.3. Emergency OUT Selection. STARBOARD GUN IS INHIBITED

An emergency out selection would be made in the event of either:-

No. 1. Hydraulic System Pressure Failure.

Power Transfer Unit System Failure.

Malfunctioning of the NORMAL I.R.F. Selector Valve.

The Emergency OUT sequence of operation is identical to that of the NORMAL OUT selection, with slight variations in different electrical relays and hydraulic selector valve being used. The nose wheel steering selector valve is utalised to direct fluid to operate the probe operating jack and No.2. Hydraulic System fluid is the operating medium.

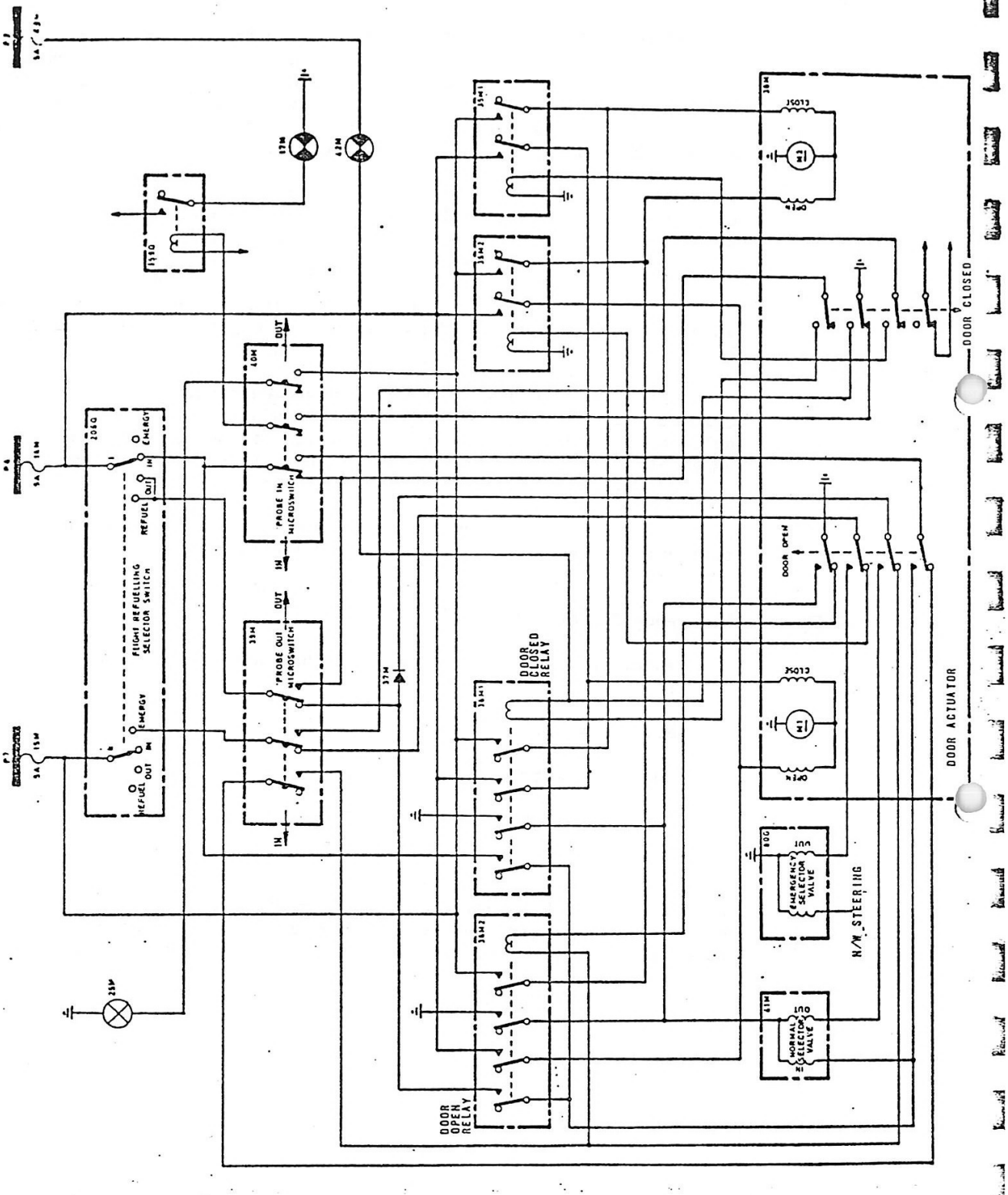

FIG. 4 PROBE POSITION CONTROL ELECTRICAL CIRCUIT.

1.3.4. Out Selection.

A training position of OUT (post-MOD 567) on the IN FLIGHT REFUEL switch in the cockpit has been instituted to enable aircrew to practice DRY CONTACTS with a tanker aircraft. This position will have NO effect whatsoever on the management of the Jaguar fuel system,and fuel cannot be passed from the tanker aircraft to its receiver during this operation.

The hydraulic sequencing of the probe door, probe and indicator lamps are identical to that of a Refuel selection.

NOTE:

In both 'Nosewheel Steering' and 'In Flight Refuelling' Emergency Probe OUT conditions the Electro Hydraulic Selector Valve, supplies only one line to each service, the return of each service by-passing the selector, thus the one selector valve can supply the two services without difficulty. The selectors return line is simply to allow internal valve functioning.

The functions of the systems are such that at NO times will both systems be in use together.

Should probe 'Emergency OUT' be selected in flight and on landing the Nosewheel Steering be selected, the Refuel Probe will remain OUT. The jack internal claw locks holding the probe in the OUT position. This will in no way effect the nosewheel steering selection.

On rectifying the fault that necessitated the use of an Emergency Selection the probe can be returned to the 'IN' position by normal selection and will continue to function in that mode. No other servicing being necessary.

2. SYSTEM COMPONENTS. (Hydraulic).

2.1. Electro/Hydraulic Selector.

2.1.1. Introduction.

This selector is electrically operated to direct fluid to either of two services and to simultaneously open the return line from the other service. The main flow of fluid is controlled by a bobbin type valve operated by the fluid directed, as required by two pilot valves each operated by a solenoid. When both solenoids are de-energised, the bobbin is in the central position so that supply fluid to the services is cut-off, but return fluid from the services is able to flow to the return connection.

2.1.2. Description.

The body of this unit houses a bobbin valve assembly and two identical pilot valves each connected by fluid ways to pipe adaptors which provide for connection purposes.

The bobbin valve assembly consists of a sealed liner in which the bobbin operates to direct fluid through drillings in the liner to the selected connection ports. The bobbin valve is moved by two sealed opposing actuating pistons, positioned one at each end of the bobbin and each housed within a centralising piston. The centralising pistons each operate in the sealed bore of an end fitting which is screwed in to secure the liner in a centralised position. Each centralising piston is loaded at its outer end by a spring interposed between the centralising piston and a spring guide in the end fitting.

Each pilot valve assembly comprises of a spring, filter, two sealed valve seats and a spacer, shimmed for fitted spring length and ball movement. A push rod locates through the spacer and the outer valve seat to contact a ball valve which operates between the two valve seats. Centrally surmounting each pilot valve assembly is a solenoid, retained by four cap screws, with its screw abutting a spring loaded rod which it depresses to contact the pilot valve push rod and actuate the pilot valve when energised. The armature screw provides for adjustment and is surmounted by a sealed cap, while a plug receptacle is retained by four cap screws to receive the plug carrying the electrical supply from the aircraft to the unit.

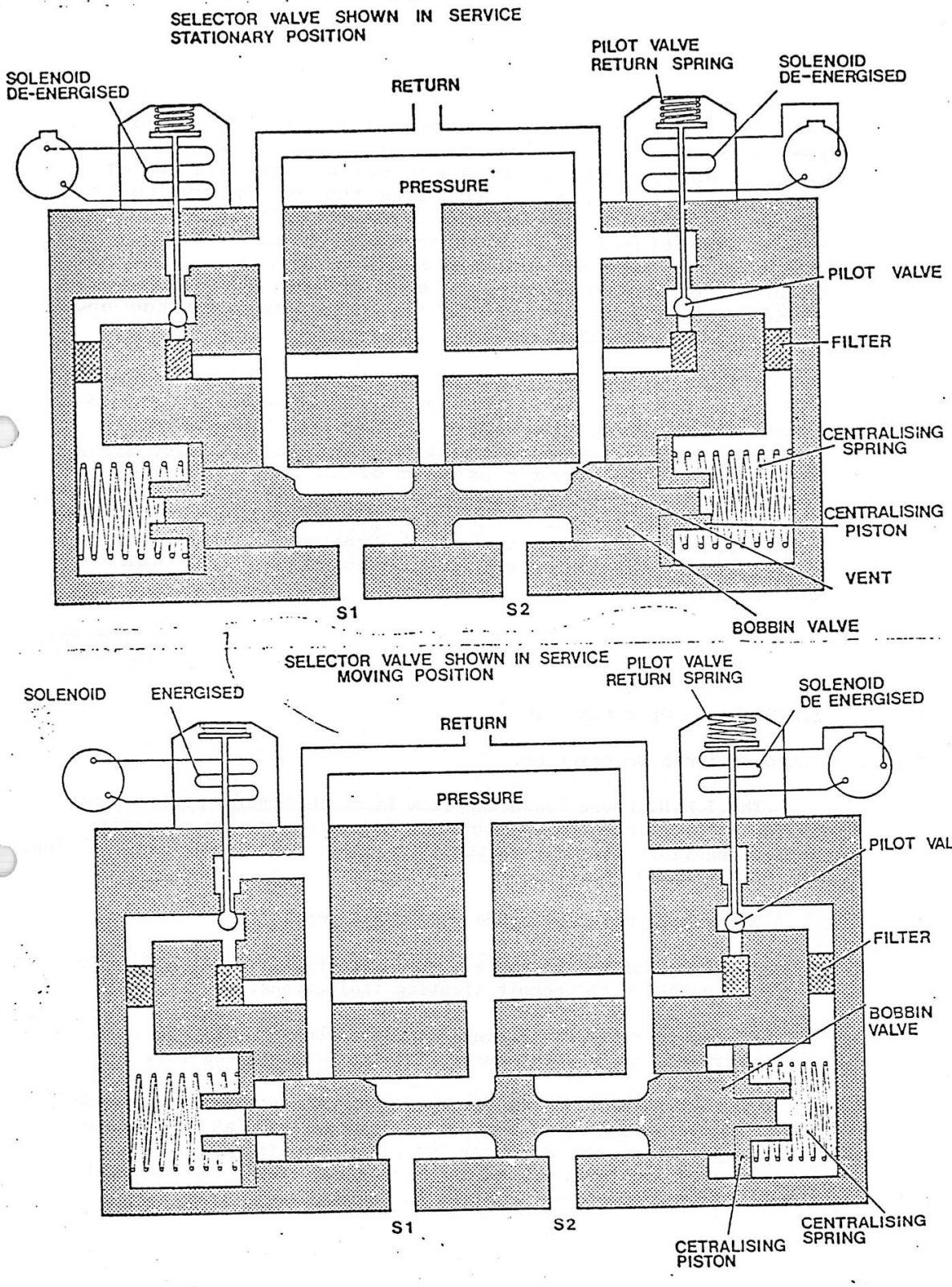

FIG'S. 5 & 6 ELECTRO HYDRAULIC SELECTOR VALVES

2.1.3. Operation.

When both solenoids are de-energised FIG.5. the solenoid armature in each pilot valve is extended by its spring to thrust the ball valve against the inner valve seat. Supply fluid is thus cut off and the spring at each end of the liner centralises the bobbin the central flange of which closes the pressure port in the liner, thus preventing fluid flow through the unit. Return fluid from service connections S1 and S2, however, will be able to pass through the vent in the adjacent flanges of the bobbin and return via the fluid ducts in the body to the tank connection.

When either solenoid is energised FIG 6, the solenoid armature retaining the applicable valve against its seat is withdrawn and supply fluid from connection P unseats the ball valve and flows via the fluid ducts in the body to the appropriate end of the bobbin assembly where axial movement of the bobbin in the pre-selected direction then permits the passage of fluid to the relevant service connection and the return of displaced fluid from the other service connection to the tank connection.

2.2. I.F.R. Probe Operating Jack.

2.2.1. Introduction & Description.

The I.F.R. Probe Operating Jack is of the double action type, it features an internal, mechanical spring finger claw, locking device enabling the jack ram to be locked in the 'RETRACTED' position. (PROBE EXTENDED).

Externally mounted on the jack body are:-

A Switch Unit - to enable system electrical sequencing to be maintained with cockpit lighting indications.

A Shuttle valve - allowing the use of both normal and emergency hydraulic pressures to retract the jack ram.

Fitted inside each delivery port at both ends of the cylinder body and retained in position by the Shuttle Valve at one end and a coupling block at the other are two plate type filters which protect the jack internal mechanism against foreign bodies which could be contained in the hydraulic fluid.

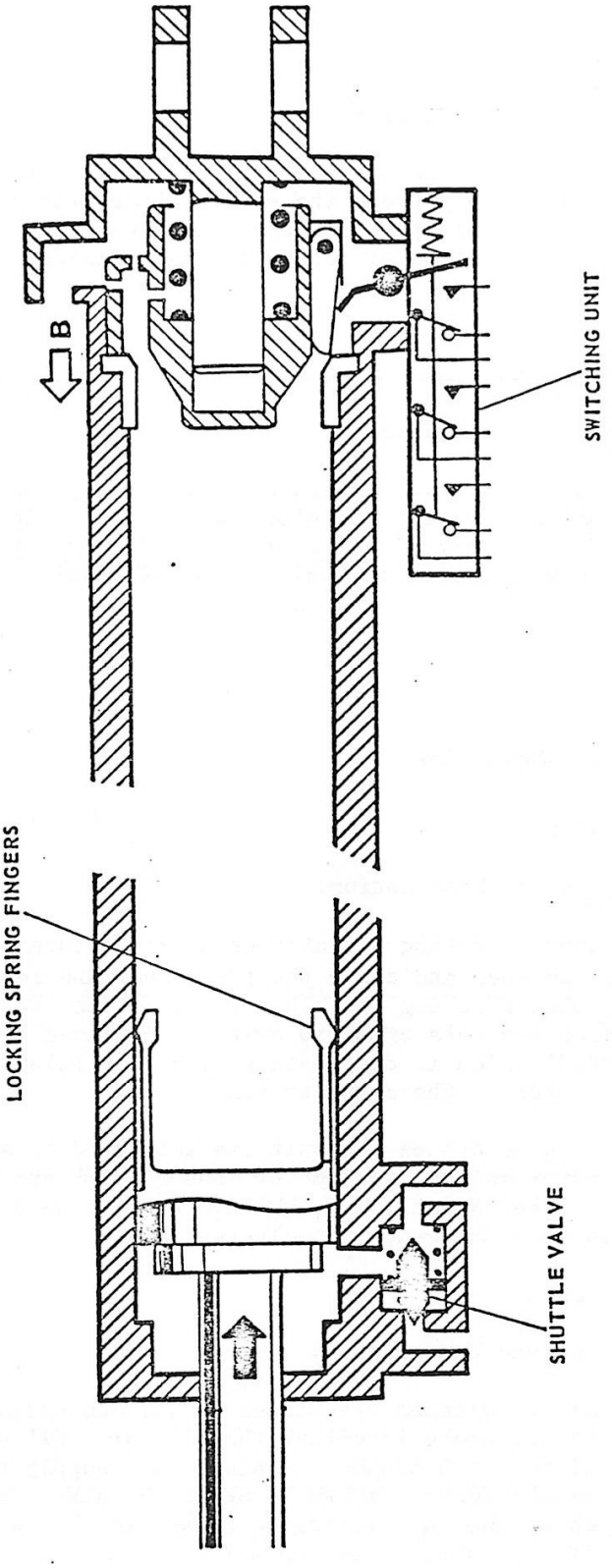

FIG. 6 I.F.R. PROBE OPERATING JACK

2.3. Two Way Restrictor.

2.3.1. Inroduction and Description.

A two way or fixed orifice restrictor valve located in the hydraulic pipe line between the electro hydraulic valve and jack, controls the rate of operation and speed at which the service can be operated. This type of restrictor is explained fully in Chapter 1 paragraph 4.22.

2.4. Non Return Valve.

2.4.1. Inroduction and Description.

This non-return valve fitted in the, low pressure return, hydraulic pipe line from the electro/hydraulic selector valve to system return for normal and emergency selection prevents excessive back pressures being felt within the I.F.R. probe circuit and is explained fully in Chapter 1 Paragraph 4.18.

3. ELECTRICAL COMPONENTS.

3.1. Door Actuator.

3.1.1. Introduction and Description.

The door operating actuator is a twin motored linear unit who's purpose is to open and close the probe door and relay a sequencing procedure when reaching the extremities of its travel. The assembly incorporates two sets of micro switches anotated 'DOOR OPEN' and 'DOOR CLOSED' which in conjunction with four relays, control the limit of travel of the actuator ram.

The twin motors of the unit are activated by selection of the cockpit master switch. Both motor runs to OPEN and CLOSE the probe door when either Normal, OUT, REFUEL or IN is selected and both motors run when Emergency is selected.

3.2. Micro-Switches.

3.2.1. Introduction and Description.

Two micro switches are fitted in the sequencing circuit and are operated by the probe in either the 'IN' or 'OUT' position. The probe IN microswitch breaks the electrical supply to the 'PROBE IN' solenoid of the NORMAL HYDRAULIC SELECTOR VALVE. The 'probe out' microswitch breaks the electrical supply to the 'probe out' solenoid of the normal selector valve or the 'probe out' solenoid of the emergency selector valve.

CHAPTER 9.

NOSE WHEEL STEERING AND NOSE WHEEL ANTI-SHIMMY SYSTEMS.

CHAPTER 9.

CONTENTS.

1. NOSE WHEEL STEERING.
1.1. INTRODUCTION.
1.2. DESCRIPTION.
1.3. OPERATION.

2. SYSTEM COMPONENTS.
2.1. ELECTRO HYDRAULIC SELECTOR VALVE.
2.2. VARIABLE RESTRICTOR VALVE.
2.3. COUPLER UNIT.
2.4. TWO WAY LOADED VALVE.
2.5. DIRECTIONAL STEERING VALVE.
2.6. STEERING JACK.
2.7. ANTI SHIMMY VALVE.
2.8. PRESSURE REDUCING VALVE.

LIST OF ILLUSTRATIONS.

FIG.1. NOSE WHEEL STEER & ANTI-SHIMMY CIRCUIT.
FIG.2. NOSE WHEEL STEER LINKAGE.
FIG.3. NOSE WHEEL STEER ELECTRICAL CIRCUIT.
FIG.4. ELECTRO-HYDRAULIC SELECTOR VALVE.
FIG.5. ELECTRO-HYDRAULIC SELECTOR VALVE.
FIG.6. VARIABLE RESTRICTOR VALVE.
FIG.7. VARIABLE RESTRICTOR VALVE.
FIG.8. COUPLER UNIT.
FIG.9. COUPLER UNIT.
FIG.10. COUPLER UNIT.
FIG.11. TWO WAY LOADED VALVE.
FIG.12. DIRECTIONAL STEERING VALVE.
FIG.13. STEERING JACK.
FIG.14. ANTI-SHIMMY VALVE.
FIG.15. PRESSURE REDUCING VALVE.

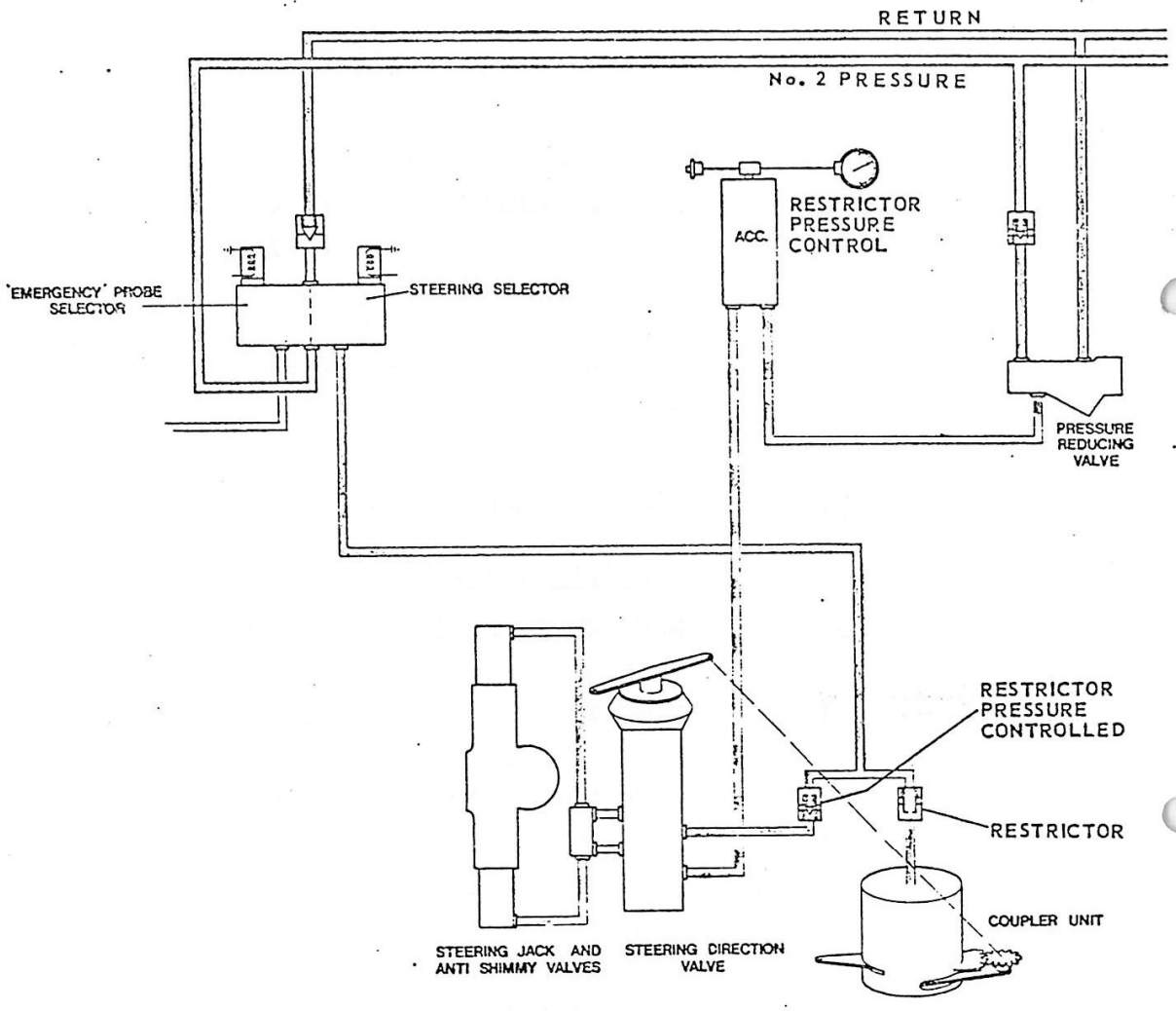

NOSE WHEEL STEERING & ANTI SHIMMY

FIG. 1 NOSE WHEEL STEERING HYDRAULIC SYSTEM.

CHAPTER 9.

1. NOSE WHEEL STEERING.

1.1. Introduction.

Directional control of the Jaguar whilst taxying, is effected through Nose Wheel Steering, which provides control through a range of 55° each side of the Aircraft Centre Line.

The steering power is supplied by No.2. hydraulic system which operates an integral jack within the nose undercarriage unit. The steering jack rotates the nose wheel via its inner rotating tube and a rack and pinion mechanism.

When 'Steering' is selected, the pilot's signal from the rudder pedals is 'coupled' and transmitted via linkages to the steering direction control valve which controls the operation of the steering jack relative to the pilot's demand. When the wheel has turned the required angle as determined by rudder pedal deflection a mechanical feed-back mechanism from the nosewheel rotating tube cancels the signal on the direction control valve. Further signals can be superimposed on this angle, in either direction, and the wheel will move the required angle until it cancels the new signal.

When 'steering' is selected off, hydraulic power from No.2. system is supplied at a reduced pressure to both sides of the steering jack to ensure the nosewheel centralises before 'retraction' of the undercarriage is selected.

It also ensures that anti-shimmy facilities are provided as hydraulic pressure is directed into each side of the steering jack passing through a shimmy damper valve. These valves allow full flow into the jack but restrict the return flow.

An accumulator in the reduced pressure line ensures that the nosewheel centralises and that limited anti-shimmy facilities are provided should No.2. hydraulic system fail.

During retraction the nosewheel is mechanically locked central, and remains so whilst the undercarriage is retracted.

For towing purposes the steering mechanism can be disengaged mechanically to give 360° movement of the castering angle. For maintenance purposes the nose-wheel can be locked in the straight ahead position.

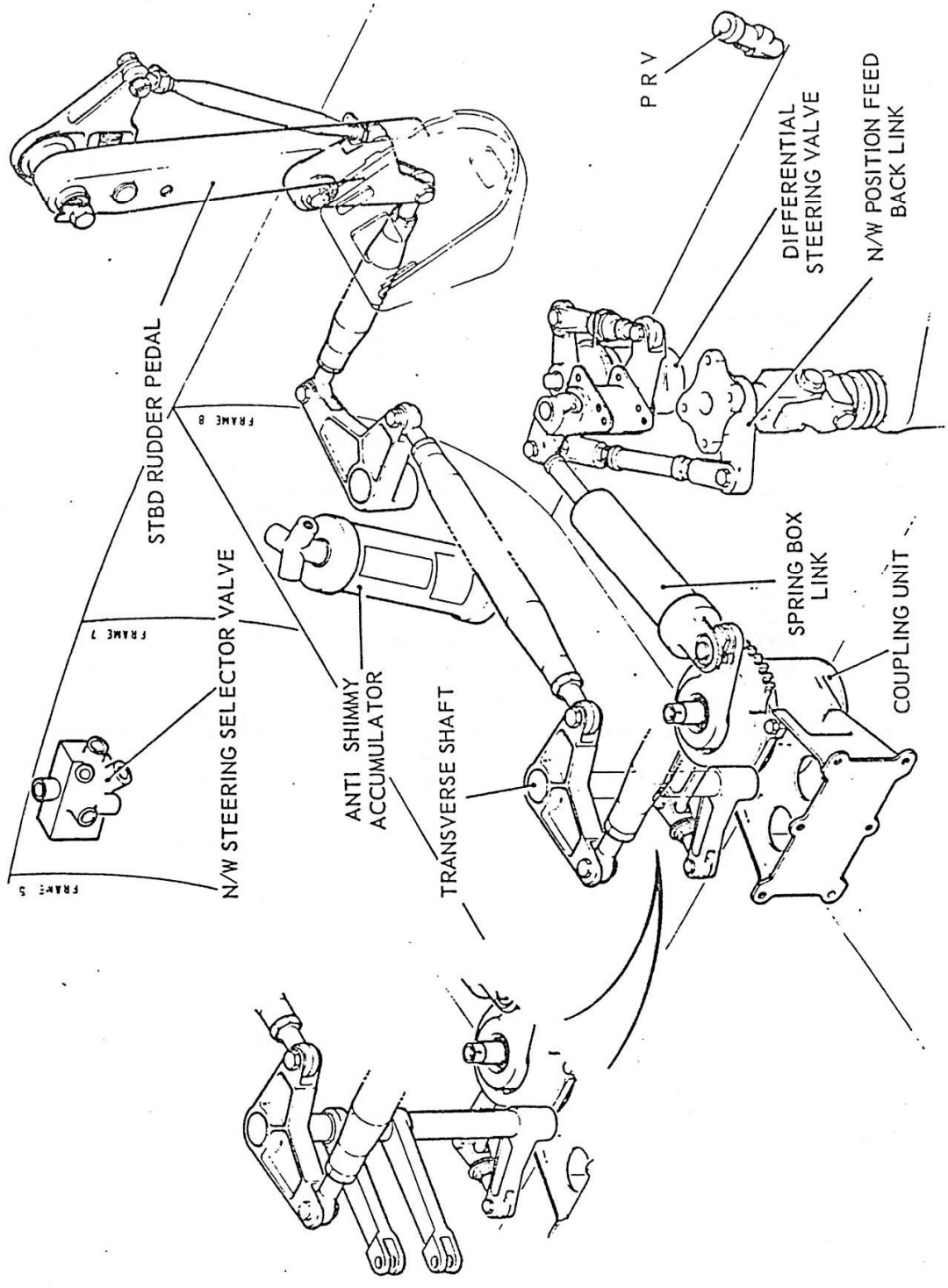

FIG.2 WHEEL STEERING LINKAGE

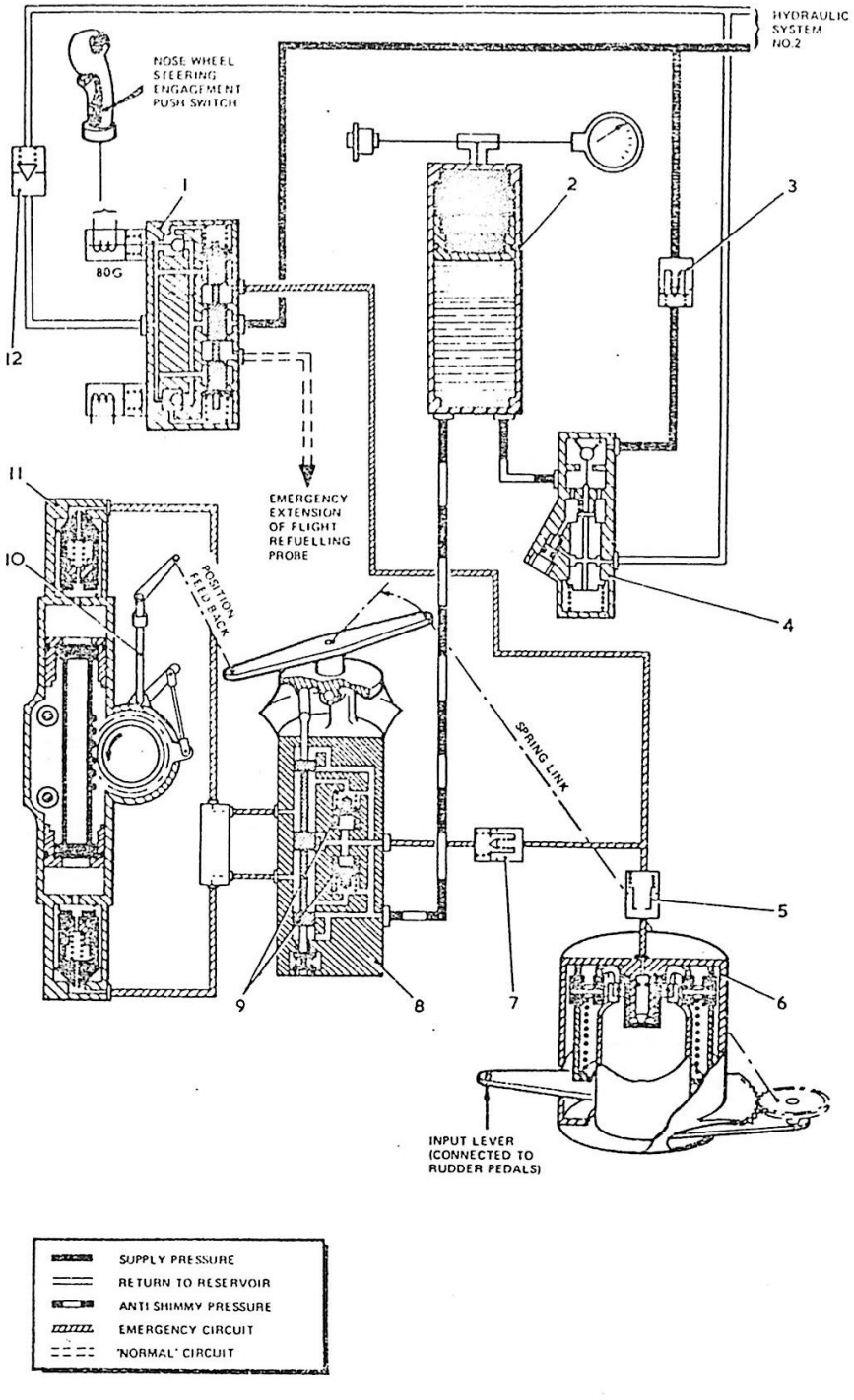

(O)S.20-40.3-1

Fig.3. Nose wheel steering hydraulic system

1.2. Description.

The steering control consists of a linkage connected indirectly to the rudder pedals via a bell-crank lever, secured to the base of a sealed transverse on the underside of the cockpit floor.

A lever, under the floor at the lower end of this shaft operates a coupler which transmits movement to a Directional Control Valve via a spring link. This movement is transmitted to the Directional Valve by a bell-crank which is also connected to the under-carriage leg transmission rod. Two rigging holes are provided in the coupler output lever and in a lever on the distributor bell-crank for adjustment purposes.

The steering control is engaged by means of a coupler unit which has an input lever and an output lever both rotating independantly of each other. The two levers are linked together by a system of rollers which engage with a cam under the action of an internal hydraulic actuator. The output lever is connected to a spring link via a crank coupled to an eighteen-tooth pinion which meshes with a seventeen-tooth sector embodied in the coupler body. This device provides a non-linear gearing (NLG) to the movement. The coupler contains a microswitch assembly. When the coupler is engaged, the contacts in the microswitch change over to the 'coupled' position, thus preventing the selection of 'retract' on the 'normal' undercarriage selector and at the same time lighting the indicator lamp 'N/W' on the port instrument panel. The levers will only 'Couple' if within 13° of each other, if not, the linkage will require to be moved.

A spring link provides a spring connection between the coupler unit and the directional valve via a bell-crank. The link comprises a spring working in compression between two cups which are acted upon by a rod working in compression and tension. The rod is connected to the intermediate bell-crank by an adjustable ball-end, used for adjusting the length of the link.

NOTE:

The minimum length of end-fitting thread engaged on the rod is indicated by a length of differently coloured cadmium plating. When adjusting the length of the link, the separately coloured part of the thread must not be visible at the bottom of the locking notch in the rod end.

1.3. Operation.

The Nose Wheel Steering is engaged by depressing the orange selector button on the PORT side of the control column hand grip, at its base. When the button is depressed an electrical supply is directed to energise the Nose Wheel Steering solenoid section of the combined Nose Wheel Steer/Emergency I.F.R. Probe Electro Hydraulic Selector Valve. This selector valve can only operate providing the electrical uni-selector unit switch has rotated and both the nose undercarriage, compression micro switch and leg down lock micro switches are set to a COMPRESSED and LOCKED DOWN configuration. At the same time a NOSE WHEEL STEERING AMBER INDICATION will be illuminated on the front port instrument panel.

The nose wheel steering circuit will now be pressurised by No.2. hydraulic system pressure of 3,000 p.s.i. acting directly into the COUPLER UNIT and STEERING DIRECTION VALVE. Pressurising the nose wheel circuit isolates the "Anti-Shimmy Circuit", and engages the rudder pedals via the COUPLER UNIT to the steering DIRECTION VALVE.

Movement of the rudder pedals is transmitted via the control linkage to the COUPLER UNIT, which will rock the operating lever of the DIRECTION CONTROL VALVE - this in turn moves a RELAY VALVE inside the DIRECTION CONTROL VALVE - directing hydraulic pressure to one side of the STEERING JACK and opening up a return path for fluid to pass back to system return via the anti-shimmy delivery lines.

The nose undercarriage position FEED BACK linkage will then rock the DIRECTION CONTROL VALVE lever in the opposite direction centralising the relay valve into a neutral position cancelling out the original rudder pedal movement.

The system is selected "OFF" by re-selecting the orange selector button again on the control column hand grip. This action rotates the uni-selector valve contacts to an off or dead position de-energising the Electro Hydraulic Selector Valve. As the Electro Hydraulic Selector Valve reverts to its neutral position the system becomes de-pressurised, and reverts back to an Anti-Shimmy circuit during this operation of the uni-selector valve the nose wheel steering SELECTED indicator light will be extinguished.

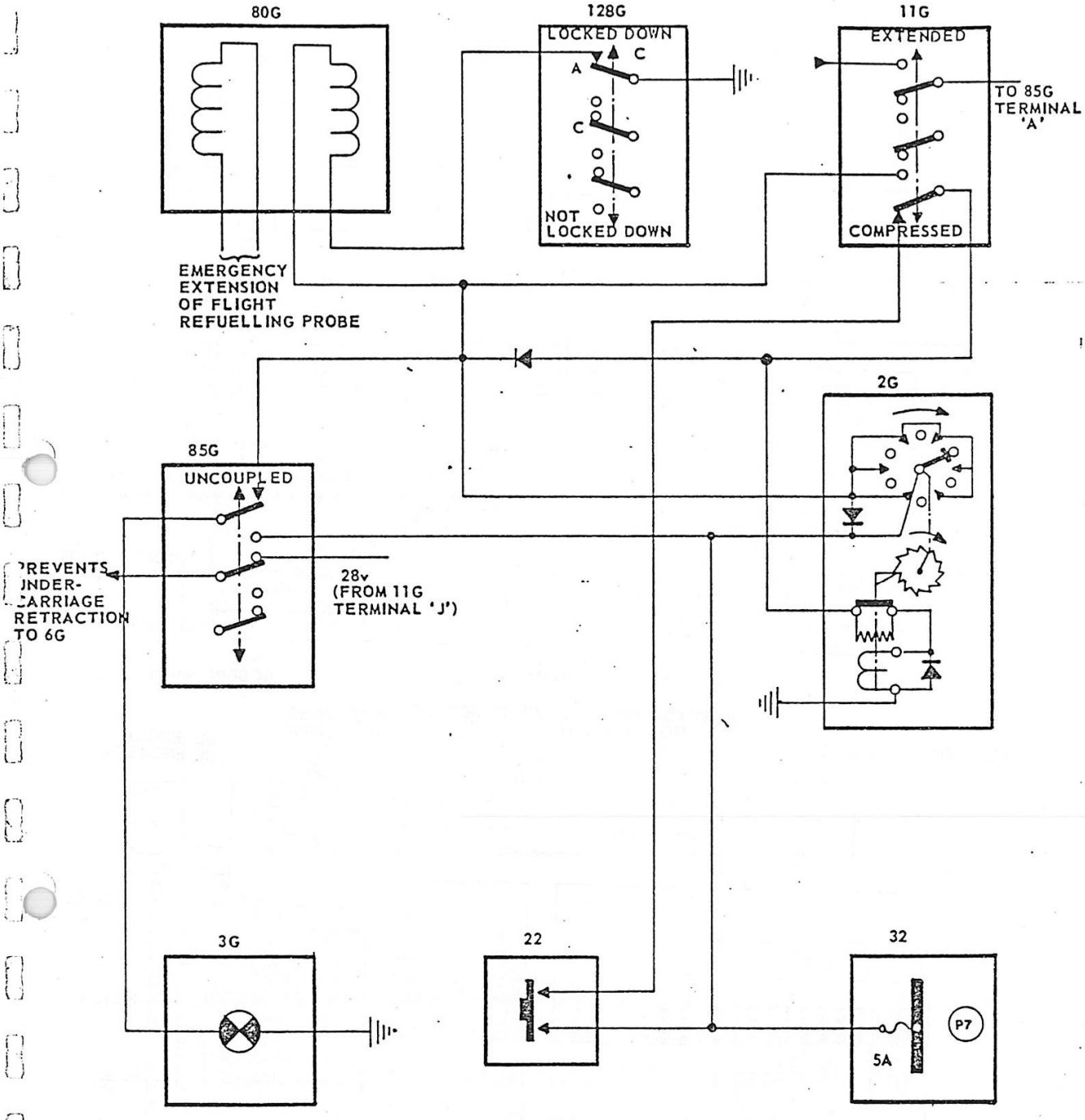

80G ELECTRICALLY OPERATED SELECTOR VALVE
128G NOSE UNDERCARRIAGE DOWN LOCK SWITCH
11G NOSE UNDERCARRIAGE WEIGHT ON SWITCH
85G NOSE WHEEL STEERING COUPLER SWITCH
2G STEERING SELECTOR
3G INSTRUMENT PANEL INDICATOR LAMP N/W.
22 CONTROL COLUMN PISTOL GRIP
32 FUSE BOX

FIG. 3 NOSE WHEEL STEERING ELECTRICAL CIRCUIT

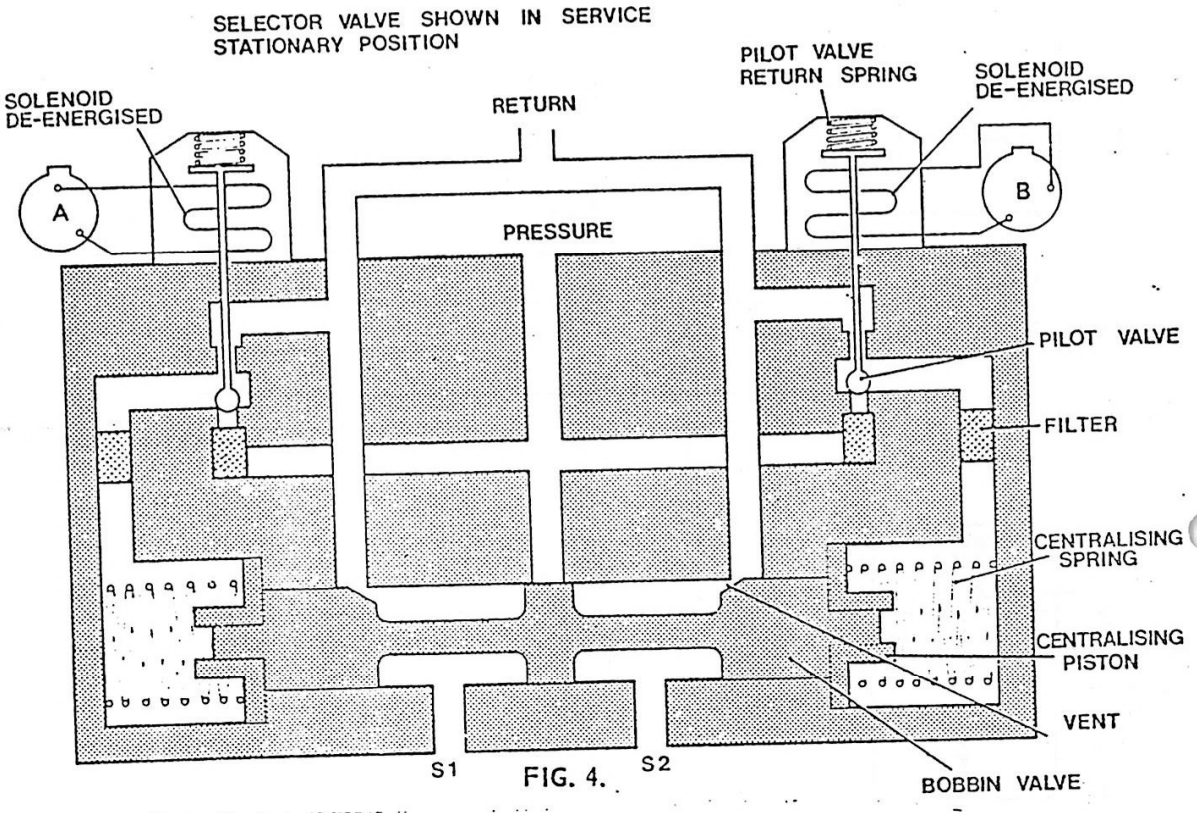

FIG. 4.

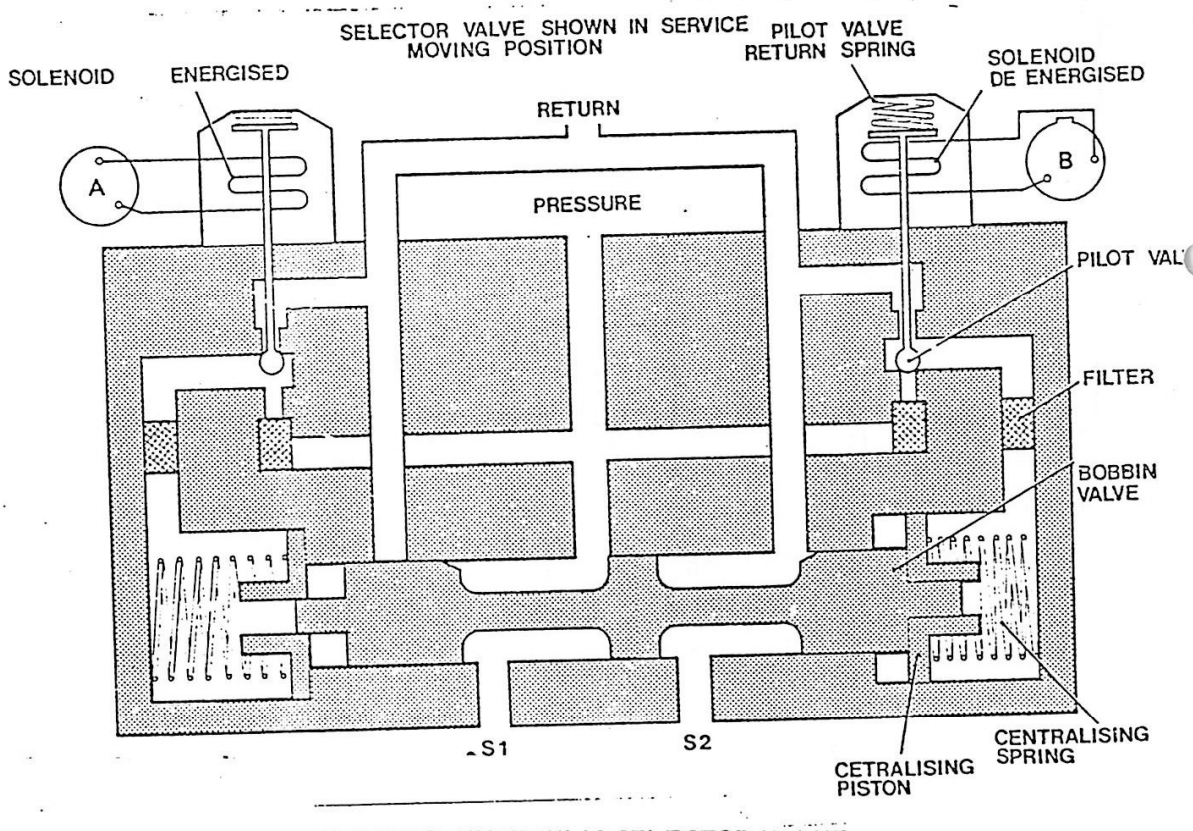

ELECTRO HYDRAULIC SELECTOR VALVE

FIG. 5.

2. SYSTEM COMPONENTS.

2.1. Electro Hydraulic Selector Valve.

2.1.1. Introduction.

This selector valve is electrically selected and hydraulically operated and "ONLY ONE SIDE" of the valve is used to pressurise the nose wheel steering circuit, there being NO RETURN passage for fluid to return through the selector valve.

The main flow of fluid is controlled by a bobbin type valve operated by the fluid directed, as required, by one of two pilot valves each operated by a solenoid. When the solenoid is de-energised, the bobbin is in the central position so that supply fluid to the services is cut-off, but return fluid from the nose wheel steering circuit can flow, via the vents in the bobbin valve, back to system return.

2.1.2. Description.

The body of this unit houses a bobbin valve assembly and two identical pilot valves each connected by fluid ways to pipe adaptors which provide for connection purposes, but only ONE pipe connection is used.

The bobbin valve assembly consists of a sealed liner in which the bobbin operates to direct fluid through drillings in the liner to the selected connection ports. The bobbin valve is moved by two sealed opposing actuating pistons, positioned one at each end of the bobbin and each housed within a centralising piston. The centralising pistons each operate in the sealed bore of an end fitting which is screwed in to secure the liner in a centralised position. Each centralising piston is loaded at its outer end by a spring interposed between the centralising piston and a spring guide in the end fitting.

Each pilot valve assembly comprises of a spring, filter, two sealed valve seats and a spacer, shimmed for fitted spring length and ball movement. A push rod locates through the spacer and the outer valve seat to contact a ball valve which operates between the two valve seats. Centrally surmounting each pilot valve assembly is a solenoid, retained by four cap screws, with its screw abutting a spring loaded rod which it depresses to contact the pilot valve push rod and actuate the pilot valve when energised. The armature screw provides for adjustment and is surmounted by a sealed cap, while a plug carrying the electrical supply from the aircraft to the unit.

2.1.3. Operation.

When solenoid A is de-energised FIG 4, the solenoid armature in the pilot valve is extended by its spring to thrust the ball valve against the pressure seat. Supply fluid is thus cut off and the spring at each end of the liner centralises the bobbin, the central flange of which closes the pressure port in the liner - thus preventing fluid flow through the unit. Return fluid from service connection S1 however, will be able to pass through the vent in the adjacent flange of the bobbin and return via the fluid ducts in the body to the return lines.

When solenoid A is energised FIG 5, the solenoid armature retaining the pilot valve against its pressure seat is withdrawn and supply fluid from the pressure connection unseats the ball valve and flows via the fluid ducts in the body to the appropriate end of the bobbin assembly where axial movement of the bobbin in the pre-selected direction then permits the passage of fluid to the nose wheel sheering service connection.

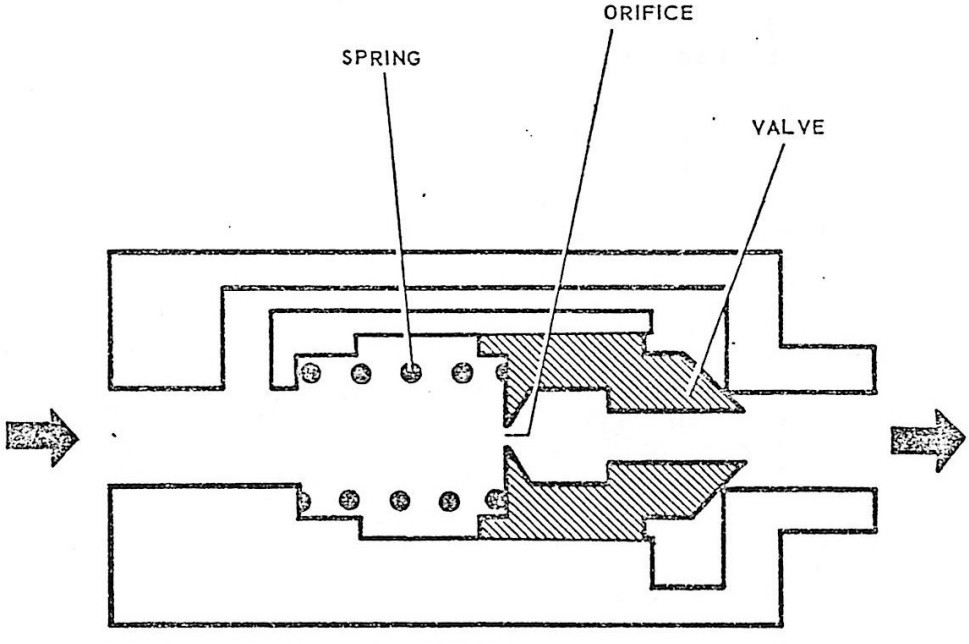

FIG. 6. FIG. 6

VARIABLE RESTRICTOR SCHEMATIC

2.2. Variable Restrictor.

2.2.1. Introduction and Description.

This type of restrictor allows the fluid flow in both directions but at different flow rates. The fluid is restricted, in one direction, through a calibrated orifice inside the unit whereas the flow in the opposite direction is free. Its main purpose in the nose wheel steer hydraulic circuit is to prevent harsh or violent engagement of the coupler unit when the circuit becomes pressurised.

The restrictor consists of a valve body containing two drilling ports, of which one can be restricted, and a spring loaded valve. The valve is kept onto its seat by a pre-set spring.

2.2.2. Operation.

Restricted Flow: - The valve is kept against its seat by the combination of hydraulic and spring pressure which only allows flow through the calibrated orifice restricting flow - the second port being blanked off.

Unrestricted Flow: - The hydraulic pressure admitted into the valve, at the opposite end to the restricted flow, lifts the valve which is lightly spring loaded. Fluid can now pass through the centre of the valve and around the internal drillings of the unit using both drilling ports for the passage of fluid in the system.

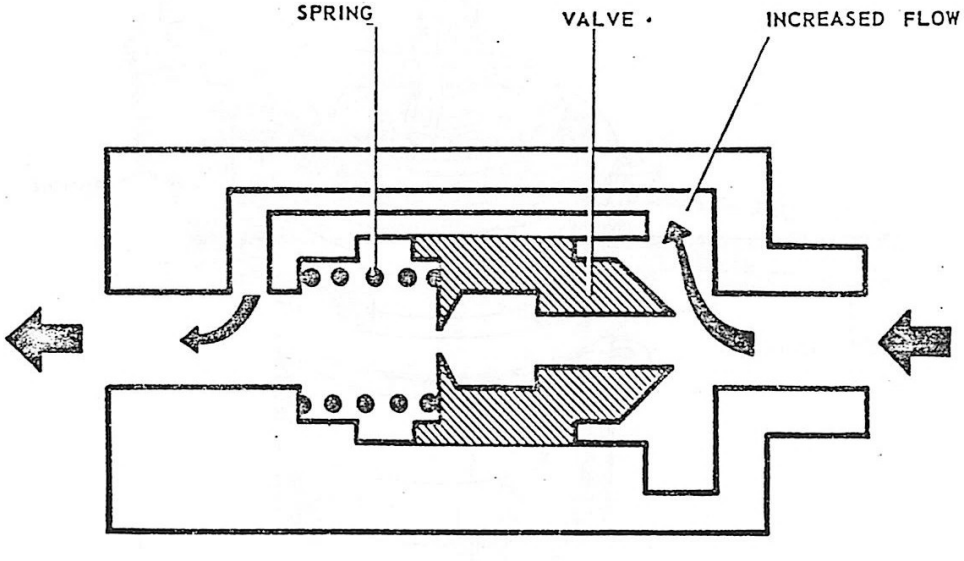

FIG. 7.

VARIABLE RESTRICTOR SCHEMATIC

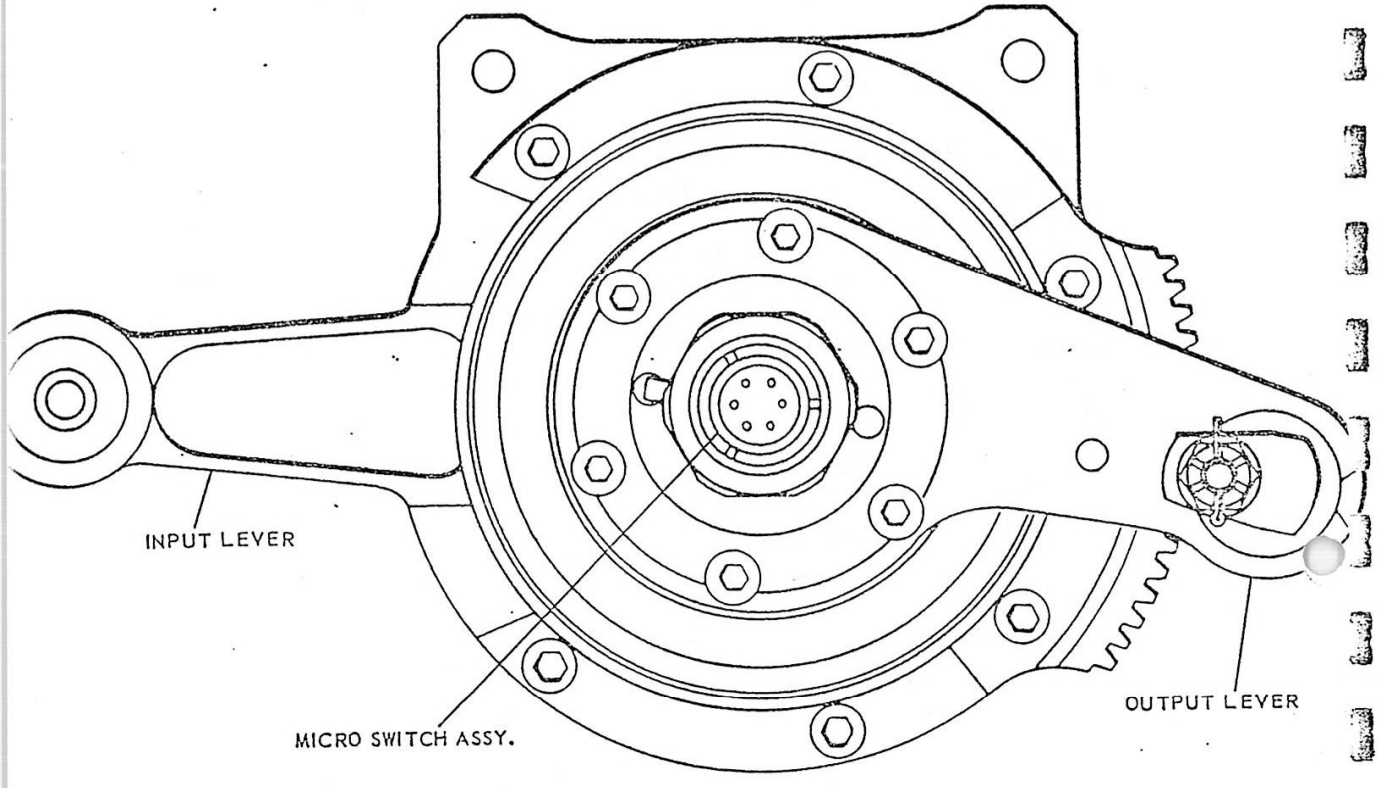

FIG.8 COUPLER UNIT (PLAN VIEW)

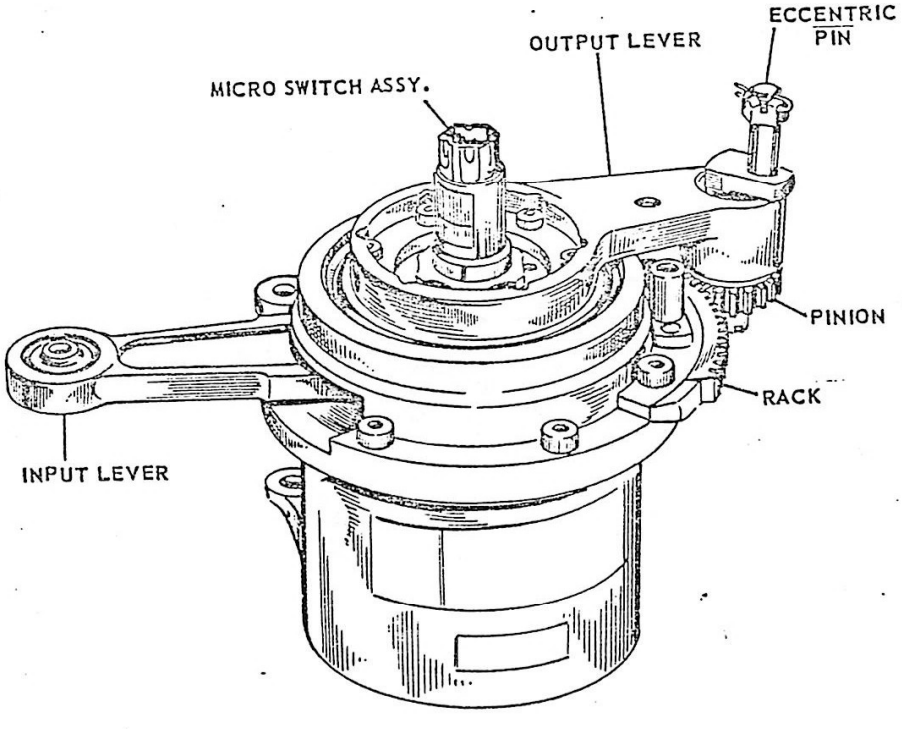

FIG.9 COUPLER UNIT (GENERAL VIEW)

2.3. Coupler Unit.

2.3.1. Introduction.

The purpose of the COUPLER UNIT is to enable the "Rudder Pedals" to be connected mechanically to the "Nose Wheel Steering" hydraulic circuit - permitting the aircraft to be steered by convential foot movement, whilst the aircraft is on the ground and to allow the Rudder Controls to be moved independently of the nose wheel steering linkage and hydraulic control valves whilst in flight.

2.3.2. Description.

The coupler unit consists of an INPUT lever fitted with a self aligning bearing secured to an outer body within the coupler unit housing. There is also an OUTPUT lever secured to an inner body within the coupler unit housing which rotates inside the outer body.

The inner body has fitted to its lever an 18 tooth pinion gear driving an eccentric crank pin, which is connected to the DIRECTION CONTROL VALVE by an adjustable spring link.

An actuator assembly consisting of numerous sub components houses mechanisms to engage or couple both the INPUT and OUTPUT levers together by applying hydraulic pressure to a piston assembly.

2.3.3. Operation.

Disengaged.

The coupler unit is disengaged by the return spring applying pressure to the sleeve assembly, which in turn, is forced downwards - the bearing housing, thrust bearing, and cup guide move until the cup guide contacts a stop on the actuator piston assembly. When the sleeve assembly is at its end of travel both roller and pin assemblies and the actuator piston are fully retracted, enabling the inner and outer bodies free to rotate independently of each other, the two opposed rollers moving freely along the HORIZONTAL slots in the OUTER BODY.

The travel of both the OUTPUT and INPUT levers is limited by stops. Travel of the OUTPUT lever is restricted by the lever two way stop acting on the eccentric crank pin, the travel of the INPUT lever is restricted by the cut away section of the UPPER CASING.

When the cup guide is fully retracted the nose wheel steering coupler ENGAGED micro switch, spring loaded plunger, is extended.

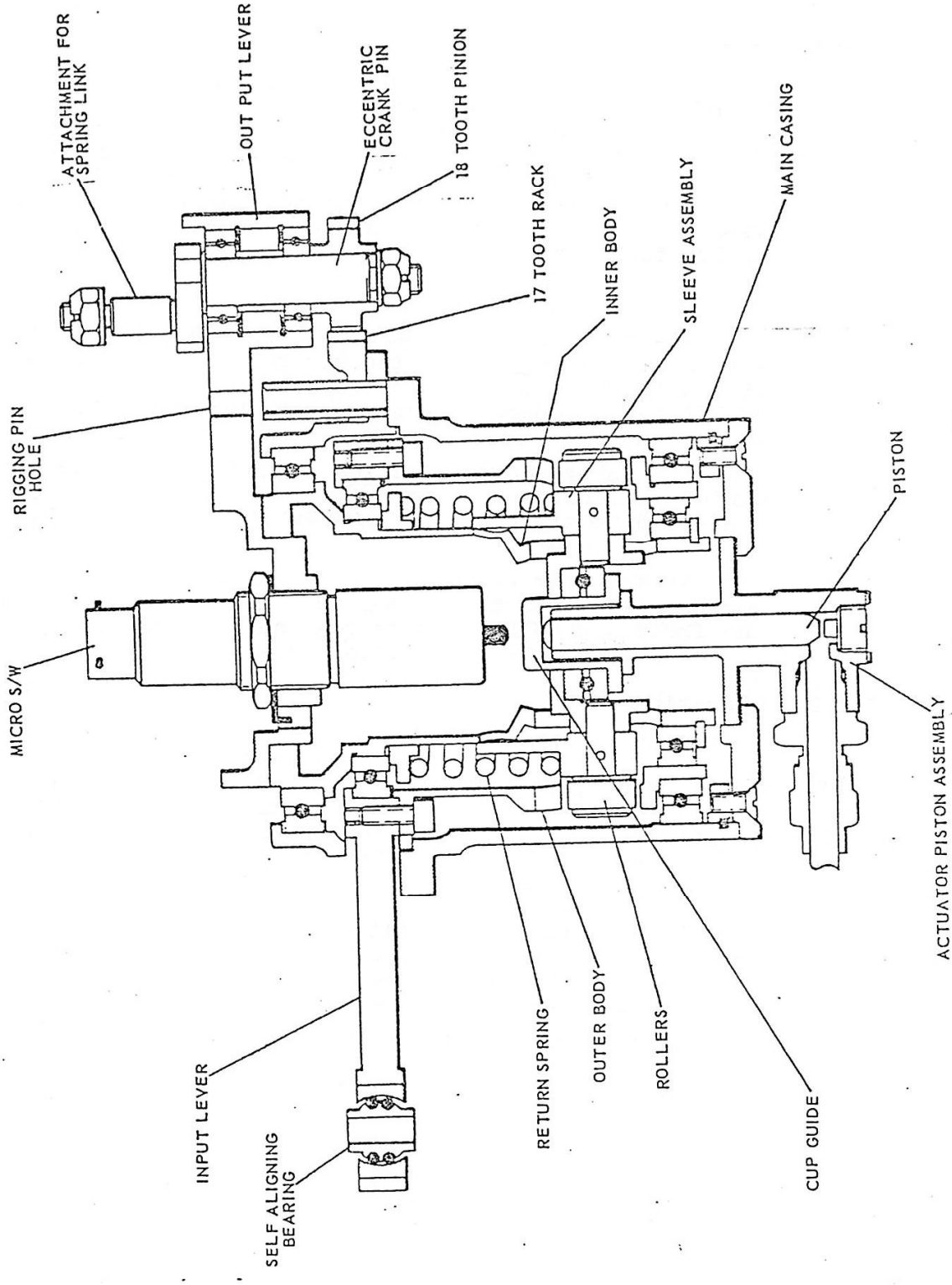

FIG. 10. COUPLER UNIT

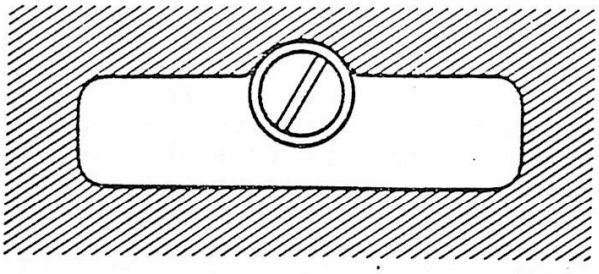

POSITION OF ROLLERS WITH COUPLING ENGAGED

Engaged.

The coupler is moved to the ENGAGED or COUPLED position by Hydraulic Pressure applied at the Actuator Piston Assembly. When hydraulic pressure is applied to the Actuator Piston Assembly it acts upon a piston which moves to an extended position. The piston will start to move as soon as hydraulic pressure builds up to 1233 ± 145 P.S.I. the force required to overcome the spring pressure keeping the sleeve assembly and piston in the retracted position.

Providing the INNER and OUTER BODY tubes are within 13° of each other engagement is possible.

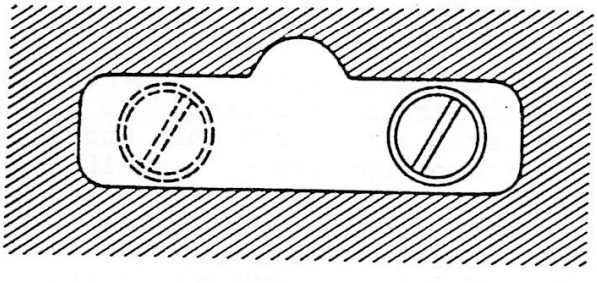

POSITION OF ROLLERS WITH COUPLING DISENGAGED

2.3.3. (contd).

The piston extending moves with it the cup guide, thrust bearing and bearing housing,(to which is attached the sleeve assembly roller and pin assemblies),compresses the return spring and operates the steering micro switch. The bearing housing travels up the VERTICAL slots in the INNER BODY to engage the two rollers with the cut away slot in the OUTER BODY locking both the INNER and OUTER BODIES together where they are firmly held in contact with each other by hydraulic pressure.

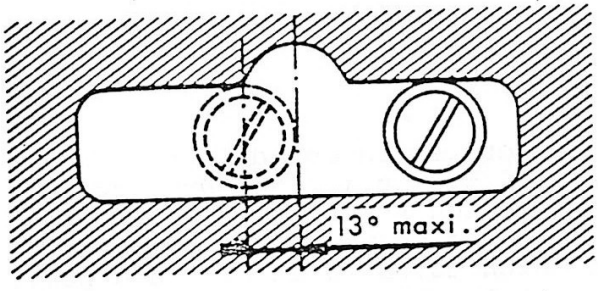

If the angle between the INPUT and OUTPUT lever is greater than 13°, indicated by the roller and roller slots in the outer body, the rollers will be pressed against the HORIZONTAL slots. Engagement can only be achieved by moving the INPUT LEVER into the engaging range, below 13°, to enable the rollers to automatically snap into their respective recesses.

When the coupling unit is engaged any displacement of the input lever is transmitted to the output lever via both rollers, sleeve assembly and bearing housing. Attached to the output lever is an 18 tooth pinion gear secured to an eccentric crank pin meshed with a 17 tooth rack on the main casing. This forms a NON LINEAR GEARING mechanism transmitting movement via a SPRING LINK to displace the DIRECTIONAL CONTROL VALVE.

2.4. Two Way Loaded Valve. (Restrictor Pressure Controlled).

2.4.1. Introduction.

This type of restrictor valve allows fluid to pass in both directions, but at different hydraulic pressures. The fluid is free to flow in one direction but will act as a non-return valve in the opposite direction, until opened at a pre-determined pressure, set by a calibrated spring. In this configuration the assembly acts as a THERMAL RELIEF/ PRESSURE RELIEF VALVE.

2.4.2. Description.

The valve consists of two N.R.V's in an outer casing with a Male Hydraulic Union at one end, and a Female Union at the opposite, to prevent wrong installation.

The outer casing houses a lightly loaded spring non-return valve which has a second heavy duty non-return valve within its own body. In the power off condition both non-return valves are held CLOSED on their respective seats by calibrated springs.

2.4.3. Operation.

System fluid pressure delivered at the inlet port "A" has a free flow to the outlet port "B" as soon as the Main Valve has opened, compressing the lightly loaded spring at a pressure of approximatley 3.6 P.S.I. System pressure and the pre-set spring loading ensuring that the controlled valve piston remains CLOSED.

2.4.3. (contd).

Reverse flow at Port B closes the main valve, assisted by its return spring - but will allow the CONTROLLED VALVE to open once system pressure has built up to compress the calibrated spring at 725 $^{+10}_{-0}$ P.S.I. as soon as the system pressure drops to 652 P.S.I. the valve will re-seat.

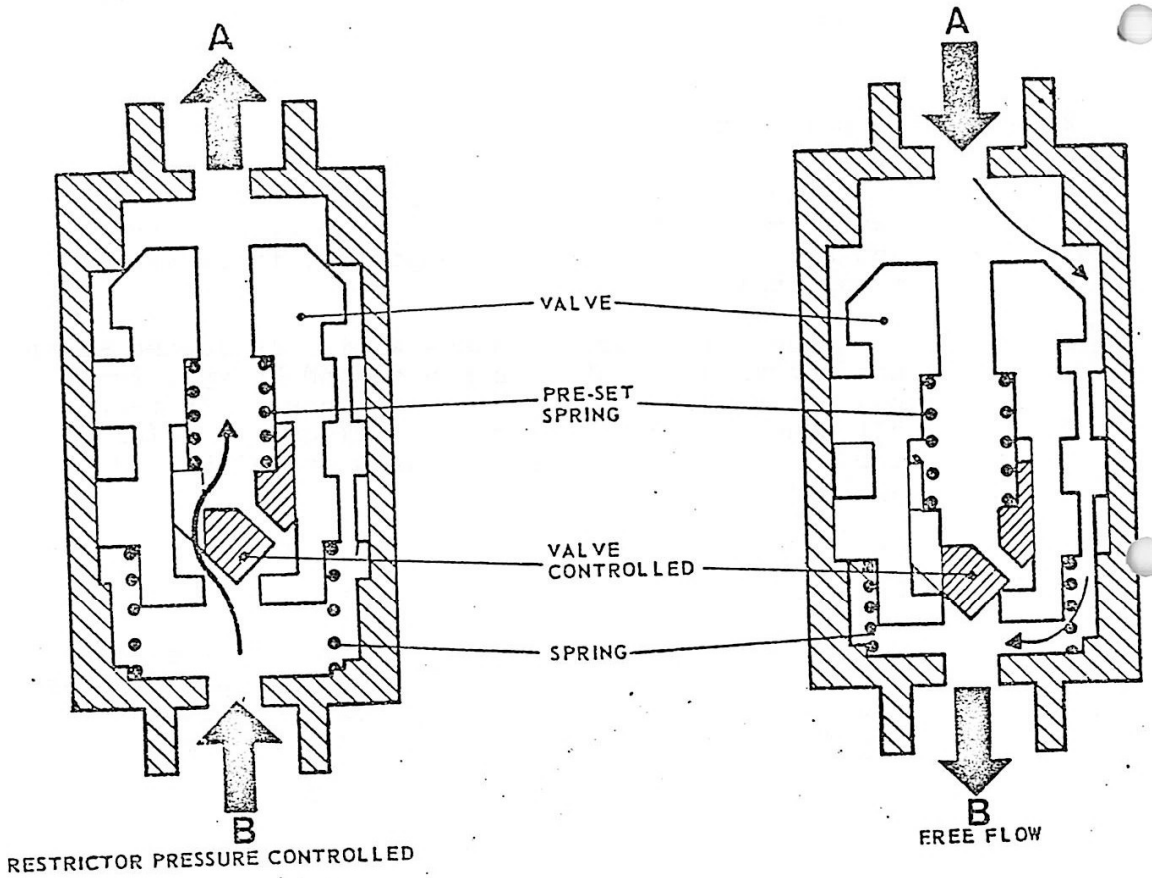

RESTRICTOR PRESSURE CONTROLLED

2.5. Directional Steering Valve.

2.5.1. Introduction.

The purpose of this valve is to direct hydraulic pressure to the Steering Jack in one of two different modes.

- Nose Wheel Steering.
- Anti-Shimmy.

In the nose wheel steering configuration the full No.2. system hydraulic pressure of 3,000 P.S.I. will be directed to the steering jack dependent on the cockpit selection, initiated by the pilot's rudder bar movement. Its pivot arm being attached at one end to the pilot input lever and its opposite end connected to a feed back mechanism situated on the nose undercarriage leg.

In the anti-shimmy mode reduced No.2. hydraulic system pressure of 435 P.S.I. is directed to each side of the steering jack pistons forming an equalising force to keep the steering jack central.

2.5.2. Description.

The valve consists of a casing body with four hydraulic connection, a pivot arm connected to a relay valve, to which is attached two operating rods, - an INPUT and FEEDBACK ROD, two,spring loaded to an OPEN position, non-return valves within the body of the unit isolate the nose anti-shimmy internal ducts from both relay valve chambers. At the top of the valve and secured to the casing body and rocker plate is a rubber boot seal to prevent the ingress of foreign bodies and moisture. A spring loaded relay valve centralising device secured to the end of the relay valve piston ram, ensures that on the completion of a selection the relay valve will revert back to its neutral position.

2.5.3. Operation.

The nose wheel steering system has been designed in such a way that the DIRECTIONAL VALVE will only receive hydraulic pressure of 3,000 P.S.I. when the aircraft is on the ground - dependent on the position of various undercarriage micro switches.

With the hydraulic supply power in the OFF condition the rocker and pivot arm assembly is in a balanced neutral position, at right angles to the valve body. The pivot arm and rocker being held neutral by the centralising spring device at the base of the valve. Also held in the neutral position is the RELAY VALVE - isolating the

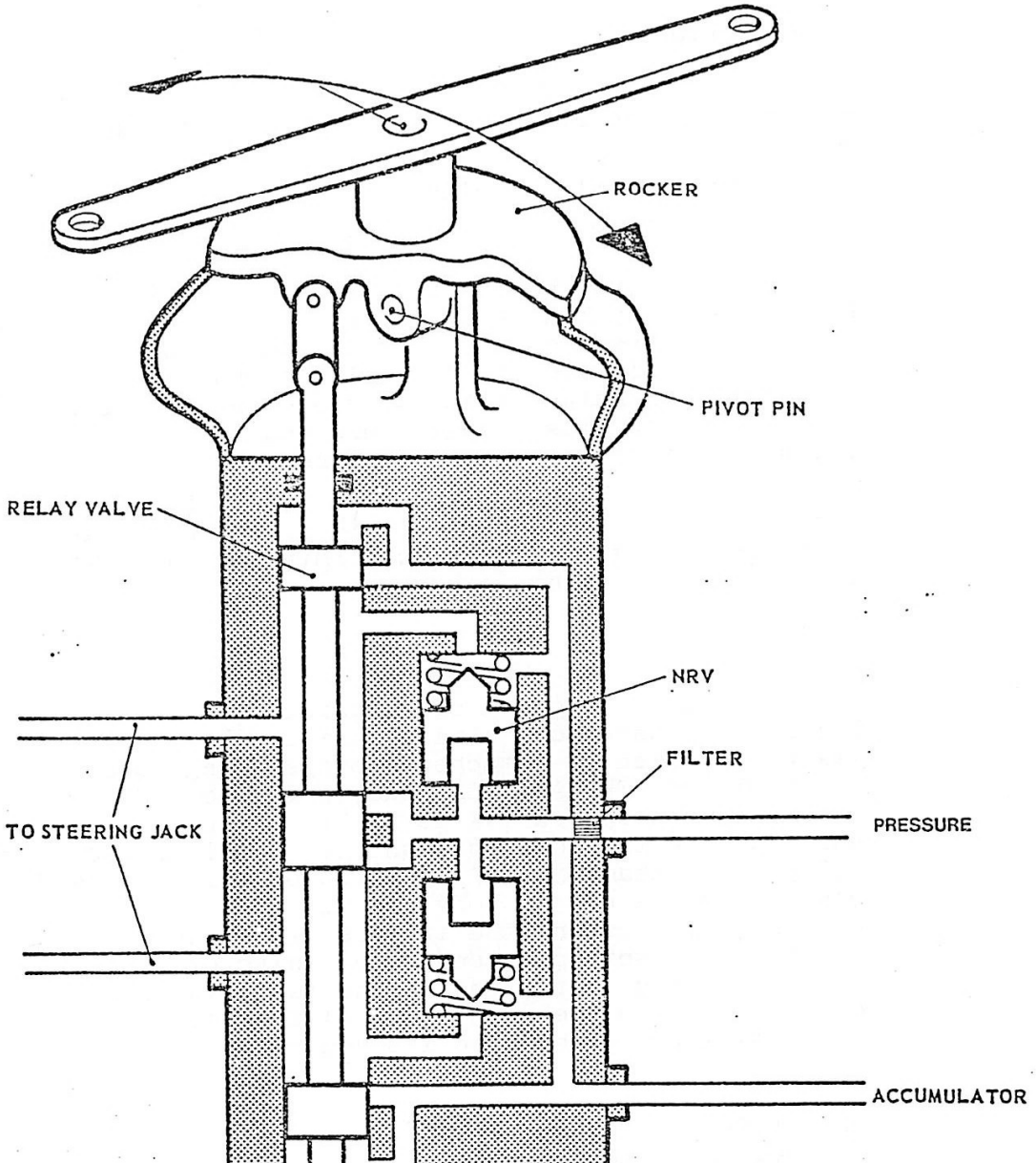

FIG.12 DIRECTIONAL STEERING VALVE

2.5.3. (contd).

pressure line from the steering jack chambers and the two N.R.V's, one held in an OPEN position by the action of their respective springs. This enables NOSE WHEEL ANTI-SHIMMY pressure to be felt either side of the steering jack from the accumulator through the OPEN N.R.V's. to the steering jack pistons.

Selection of nose wheel steering "ON" pressurises the steering system. Hydraulic pressure at 3,000 P.S.I. will be felt at the Pressure Port which:-

- CLOSES both N.R.V. and isolates the nose anti-shimmy circuit by blanking off the supply fluid pressure from the accumulator port which was being directed via the two OPEN N.R.V. to the relay valve chambers and into both sides of the steering jack.

- Awaits at the RELAY VALVE PISTON LAND ready to act which ever way the relay valve is moved.

As the INPUT LEVER is moved, by pilot selection at one end, the opposite end attached to the undercarriage leg feed back mechanism acts as a pivot point. This action causes the valve pivot arm to rock about its own pivot pin. Rocking movement of the input lever displaces the relay valve allowing pressure to flow to one side of the steering jack and return fluid from its opposite end to be passed back to system return via the accumulator port line and pressure reducing valve.

As the steering jack moves the nose undercarriage leg the selected amount, the feed back mechanism will displace the relay valve back to its central position, (assisted by the Relay Valve Centralising Spring) because the input lever pivot points have now reversed.

Selection of nose wheel steering to an OFF mode depressurises the system - both N.R.V's OPEN and excess hydraulic pressure of 580 P.S.I. will return back to system return via:-

- Pressure Port.

- Accumulator Port.

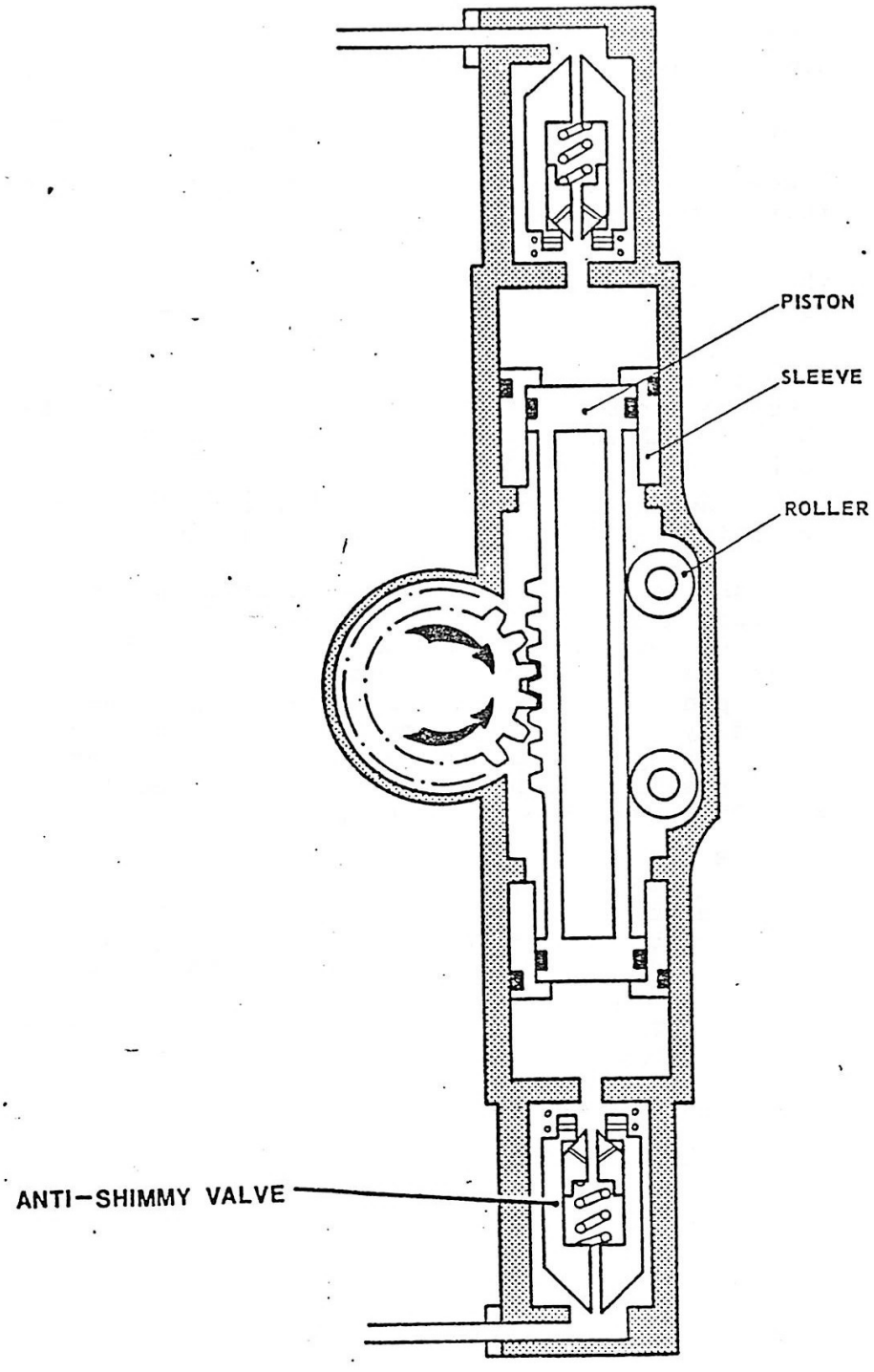

FIG 13 NOSE WHEEL STEERING JACK

2.6. Nose Wheel Steering Jack.

2.6.1. Introduction.

The Nose Wheel Steering Jack Unit is part of the Nose Undercarriage Leg Assembly, and assembled whilst the leg is made up of its numerous sub components. It is the final operating medium to steer the aircraft in the desired direction, by hydraulic fluid, under pressure being directed to either side of a piston. Also attached to each end of the steering INLET/OUTLET hydraulic connections are ANTI-SHIMMY VALVES.

2.6.2. Description.

This assembly is housed in the nose leg, and consists of a rack and pinion mechanism operating a steering tube which is attached to the wheel fork. The pinion is held in position in relation to the steering tube by a mechanical locking device which must be disengaged for aircraft towing and manoeuvring. Two horizontally opposed pistons slide in a piston sleeve, which travels with the piston, as it extends into the actuating chambers. The opposite piston slides inside the sleeve, therefore creating different effective areas.

2.6.3. Operation.

In the Anti-shimmy configuration - reduced hydraulic pressure of 435 P.S.I. is felt either side of the Steering Jack - moving both Piston Sleeves onto their respective internal stops. This in turn moves the piston to a central position, if OFF CENTRE, which is engaged with the pinion and steering tube assembly. With the jack and nose wheel in a central position the unit will be held central by equal and opposite piston area and pressure - within the actuating chambers.

In the Nose Wheel Steering mode No.2. Hydraulic System full pressure of 3000 P.S.I. is directed into one side of the actuating chamber with its opposite end open to System Return. The piston and one sleeve will extend turning the steering tube assembly via the rack and pinion assembly. The passage of return fluid from the jack is restricted by the anti-shimmy valve and supply fluid unrestricted. This ensures a smooth and positive turning motion of the nose wheel from side to side.

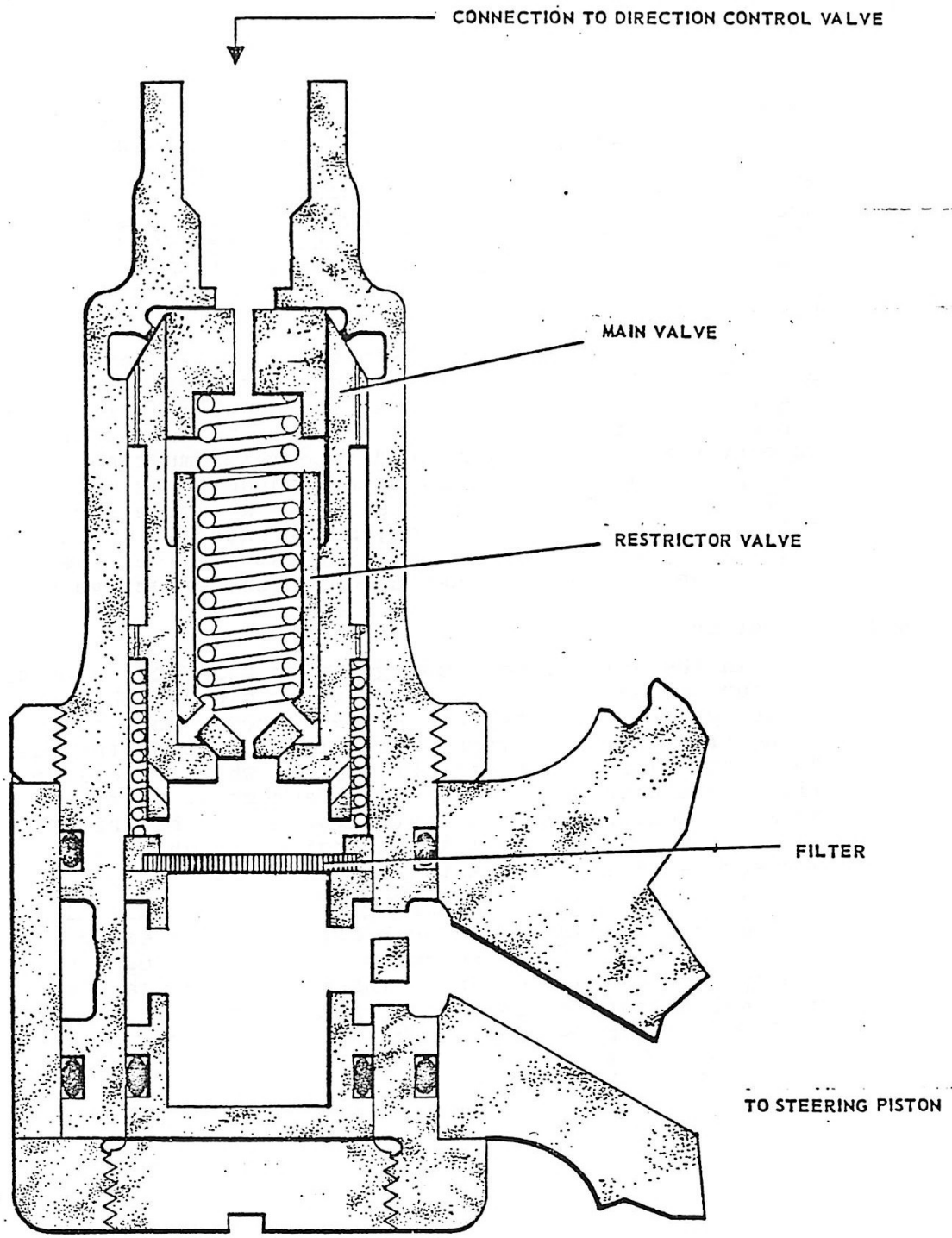

FIG 14 ANTI-SHIMMY VALVE

2.7. Anti-Shimmy Valve.

2.7.1. Introduction and Description.

Two Anti-shimmy valves fitted each end of the steering jack assembly act as two way loaded variable restrictor valves. They consist of two non-return valves one inside the body of the other.

The larger valve controls the flow into the actuating chamber, therefore the hydraulics will flow freely into the chamber and be fully restricted coming out of the chamber.

Operation:

Flow of fluid from the Directional Valve will force the large N.R.V. off its seat, allowing fluid to pass into the actuating chamber via two delivery ports:-

Through the centre of the small N.R.V.

Around the outside of the large N.R.V.

The passage of return fluid can only pass back to return (transfer) via the small N.R.V. calibrated orifice.

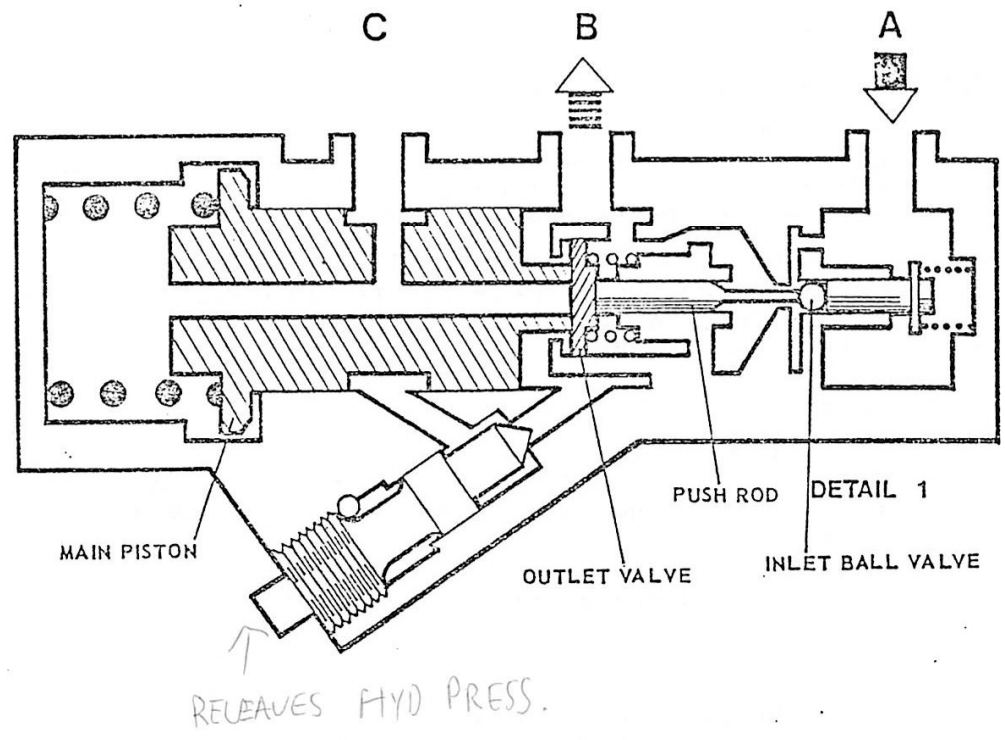

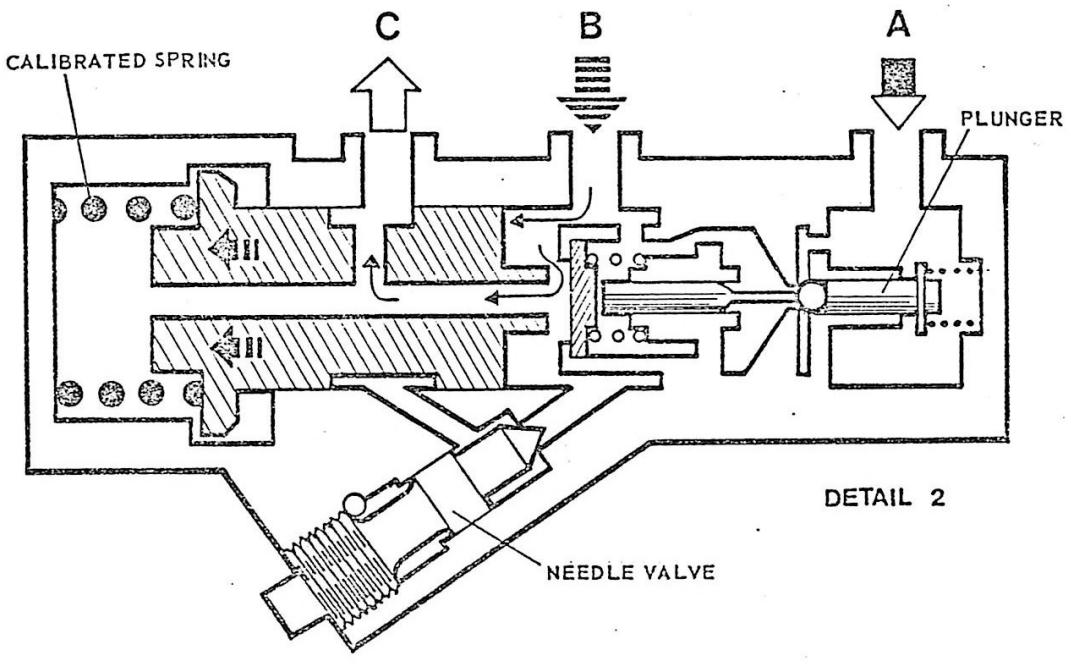

FIG 15 PRESSURE REDUCING VALVE

2.8. Pressure Reducing Valve.

2.8.1. Introduction.

This unit ensures that the hydraulic pressure supplied by No.2. system power circuit into the "Nose Wheel Anti-Shimmy" system is at a lower pressure than that supplied by the Main Hydraulic Circuit. This pressure varies from 435 to 560 P.S.I. as opposed to 3000 P.S.I. delivery pressure. The flow of hydraulic fluid, pressurised, is automatically stopped when the maximum design pressure has been exceeded and flow re-established when decreased. Furthermore it also protects components within the circuit from excess pressures and provides a return back to No.2. system hydraulic reservoir passage for fluid when the "NOSE WHEEL STEERING" system is in use.

2.8.2. Description.

The Pressure Reducing Valve consists of an outer casing with three hydraulic union connections. Located internally are two calibrated spring loaded valves, and a manual pressure relief needle valve. The valve is made up of three sub assemblies taking the form of a SPRING ASSEMBLY, INLET and OUTLET VALVES.

2.8.3. Operation.

With no hydraulic pressure in the system the main piston will be held onto its internal stop by a calibrated spring, set to compress at 435 P.S.I. The calibrated spring also ensures that the outlet valve remains CLOSED and the inlet valve kept OPEN by the action of the pushrod lifting the inlet ball valve off its seat, and compressing the plunger spring.

As fluid passes through the inlet valve from connection "A" to connection "B", pressure is allowed to build up in the pipe lines from the Pressure Reducing Valve to the Nose Wheel Steering Jack, via the Anti-Shimmy Accumulator until an increased pressure acting on the piston is sufficient to overcome and compress the calibrated spring holding the inlet valve OPEN.
When the piston moves,the outlet valve plate and push rod will also travel together until the push rod comes out of contact with the Inlet Ball Valve. The inlet ball valve will progressively CLOSE under the action of the plunger and plunger spring.

If after the inlet ball valve is CLOSED - pressure is excess of 435 P.S.I. is felt acting in the control chamber and on the main piston - the valve will relieve all excess pressure back to system return.

2.8.3. (contd).

Excess pressure acting on the main piston will further compress the calibrated spring allowing the OUTLET VALVE to OPEN, after the plate has reached its end of travel mechanical stop. Excess fluid is discharged back to return via connection C and the outlet valve will move back to its balanced CLOSED position.

2.9. Anti-Shimmy Accumulator.

2.9.1. Introduction and Description.

This accumulator situated in the nose undercarriage bay provides hydraulic pressure from the Nose Wheel Steering System for Anti-Shimmy and Nose Wheel Self-Centring via a pressure reducing valve.

The accumulator is charged with nitrogen at a pressure of 16 bars (225 lbf/in^2). The charging valve is accessible via the nose wheel well; the pressure indicator is visible through the transparent window in access panel No. 43.

CHAPTER. 10

POWERED FLYING CONTROL UNITS. (P.F.C.U).

CHAPTER. 10

CONTENTS.

1. POWERED FLYING CONTROL UNITS. (P.F.C.U's).
1.1. INTRODUCTION.
1.2. DESCRIPTION.
1.3. OPERATION.
2. RUDDER. P.F.C.U.
2.1. MAIN JACK ASSEMBLY.
2.2. MAIN SERVO VALVE & MODULATOR.
2.3. INPUT LINKAGE.
2.4. INPUT LINKAGE OPERATION.
2.5. PRESSURE FEEDBACK.
2.6. PRESSURE FEEDBACK OPERATION.
2.7. LOW FREQUENCY BLOCKING.
2.8. LOW FREQUENCY BLOCKING OPERATION.
2.9. AUTO CONTROL SYSTEM.
2.10. AUTO CONTROL OPERATION.
2.11. SOLENOID SELECTOR VALVE.
2.12. SOLENOID SELECTOR VALVE OPERATION.
2.13. AUTO-STABILISATION SYSTEM.
3. TAILPLANE. P.F.C.U.
3.1. INTRODUCTION.
3.2. DESCRIPTION.
3.3. AUTO CONTROL SYSTEM.
3.4. OPERATION.
4. SPOILER. P.F.C.U.
4.1. INTRODUCTION.
4.2. DESCRIPTION.
4.3. OPERATION.
5. SPOILER AUTO-STABILISATION. P.F.C.U.
5.1. INTRODUCTION.
5.2. DESCRIPTION.
5.3. OPERATION.
6. SERVICING.
6.1. TESTING.
6.2. CAUTION.
6.3. COVER PLATES.
6.4. LINEARITY TEST.
6.5. RIGGING PINS. WARNING.

CHAPTER 10

ILLUSTRATIONS.

FIG.1.	HYDRAULIC POWER CONTROLS SCHEMATIC.
FIG.2.	RUDDER. P.F.C.U.
FIG.3.	MAIN SERVO VALVE & MODULATOR ASSY.
FIG.4.	MAIN VALVE COMPONENTS.
FIG.5.	GENERAL ARRANGEMENT OF RUDDER P.F.C.U.
FIG.6.	RUDDER P.F.C.U. DIAGRAMATIC.
FIG.7.	ELECTRO HYDRAULIC SERVO VALVE.
FIG.8.	AUTO/STAB SOLENOID SELECTOR VALVE.
FIG.9.	AUTO/STAB BLOCK DIAGRAM.
FIG.10.	RUDDER & TAILPLANE P.F.C.U. A/STAB DIAGRAMATIC CIRCUIT.
FIG.11.	TAILPLANE. P.F.C.U.
FIG.12.	TAILPLANE. P.F.C.U. MAIN SERVO VALVE MODULATOR AND JACK.
FIG.13.	TAILPLANE P.F.C.U. DIAGRAMATIC.
FIG.14.	SPOILER. P.F.C.U.
FIG.15.	SPOILER P.F.C.U. SYSTEM DIAGRAMATIC.
FIG.16.	SPOILER A/STAB. P.F.C.U.
FIG.17.	SPOILER A/STAB. SYSTEM DIAGRAMATIC.

DESCRIPTION OF THE SYSTEM

POWERED FLYING CONTROL UNIT (PFCU)

8. Five PFCU are fitted; one to operate each spoiler, one for each element of the tailplane and one for the rudder. Each PFCU is a double-bodied single-ram actuator, each body being independently supplied with hydraulic pressure from No.1 and No.2 controls circuit respectively. Each tailplane and rudder PFCU also incorporates an autostabilization servo valve. A simplified diagram of a PFCU is shown at Fig.3.

9. The body of each PFCU is hinged to the aircraft structure and the actuator ram is linked to its appropriate flying control surface.

10. A control input from the cockpit deflects both slide valves to allow hydraulic pressure to the appropriate side of the ram pistons. As the ram moves, a position feedback linkage repositions the lever system to centralize the slide valves. The actuator then comes to rest with the control surface at the selected deflection.

11. Being provided with a duplicated hydraulic supply, a PFCU continues to function should either hydraulic supply fail; rate of operation, however, may vary in relation to control surface loading, due to the reduced PFCU power output. If supply from both engine-driven hydraulic pumps fails, the EHP continues to pressurize No.2 circuit but a further reduction in PFCU power output occurs because of the lower pressure supplied by the EHP.

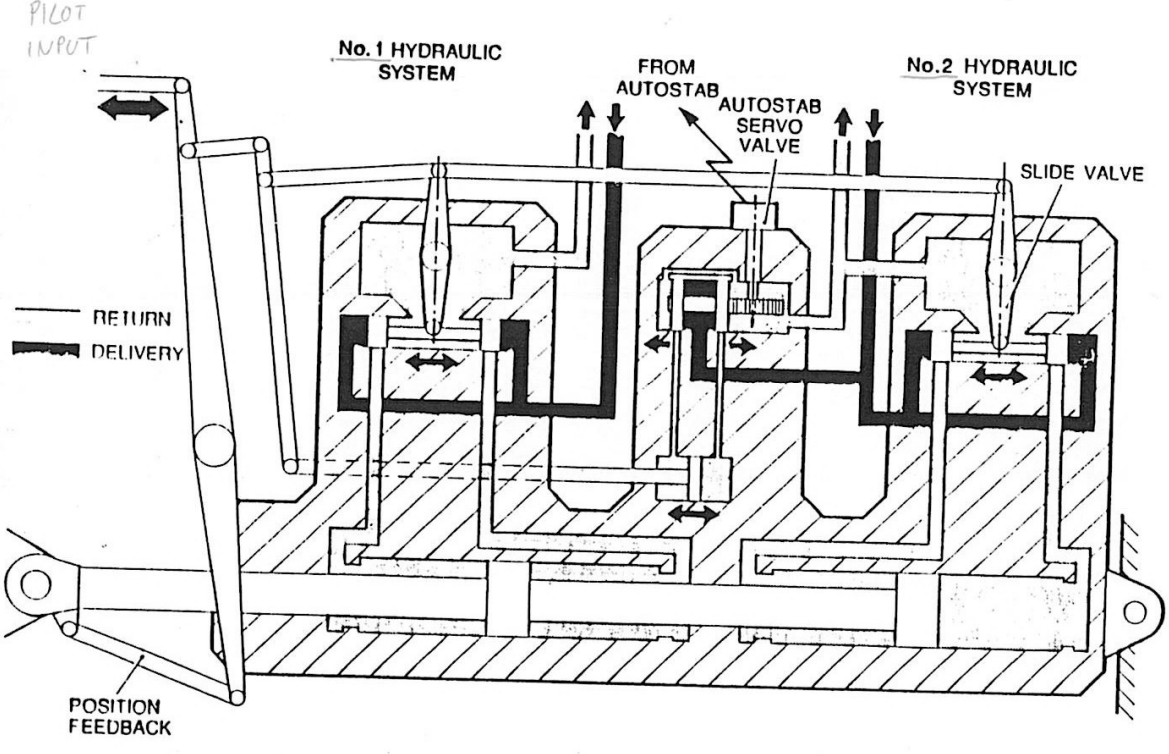

1–6 Fig.3 Powered Flying Control Unit – Simplified JACM 1 1-6.3-1(O)

CHAPTER. 10.

1. POWERED FLYING CONTROL UNITS.

1.1. Introduction.

The Jaguar is manoeuvred by Fairey Power Flying Control Units (P.F.C.U's) on all three axes.

The P.F.C.U's are designed therefore for the power operation of the differential slab tailplane, the rudder and the spoiler surfaces in accurate response to the pilot's demand by mechanical input. In addition, the tailplane and rudder P.F.C.U's give an equally accurate response to auto signals fed from a limited authority auto-stabilisation system.

Additional features in the rudder unit is low frequency blocking in the load-pressure feedback device; here, the surface actuator has very high stiffness below 2 hertz. The stiffness reduces with rising frequency until it levels off to a controlled value at all frequencies above approximately 20 hertz.

1.2. Description.

1.2.1. Tailplane and Rudder. - P.F.C.U.

The P.F.C.U. consists of a tandem acting jack controlled by twin servo valves supplied by two entirely separate hydraulic systems each valve controlling one jack of a tandem pair. Auto-control of the unit is by a miniature servo valve and jack which operate the input mechanism summing lever through signals received from the electrical control loop.

1.2.2. Spoiler. P.F.C.U.

The spoiler units are similar to the rudder and Tailplane units. The difference lies in auto-stab layout and jack body.

The auto-stab package is fitted in the pilot's control run just prior to the P.F.C.U's. The jack was designed originally without auto-stab and early trials found it necessary to incorporate an auto-stab package. The size of the jack and the area in which it is housed will not accommodate the extra unit so it is fitted as near as possible to the jack which illiminates as much control backlash as possible.

The jack is a simpler unit than the tailplane or rudder in as much that it has no pressure feedback system.

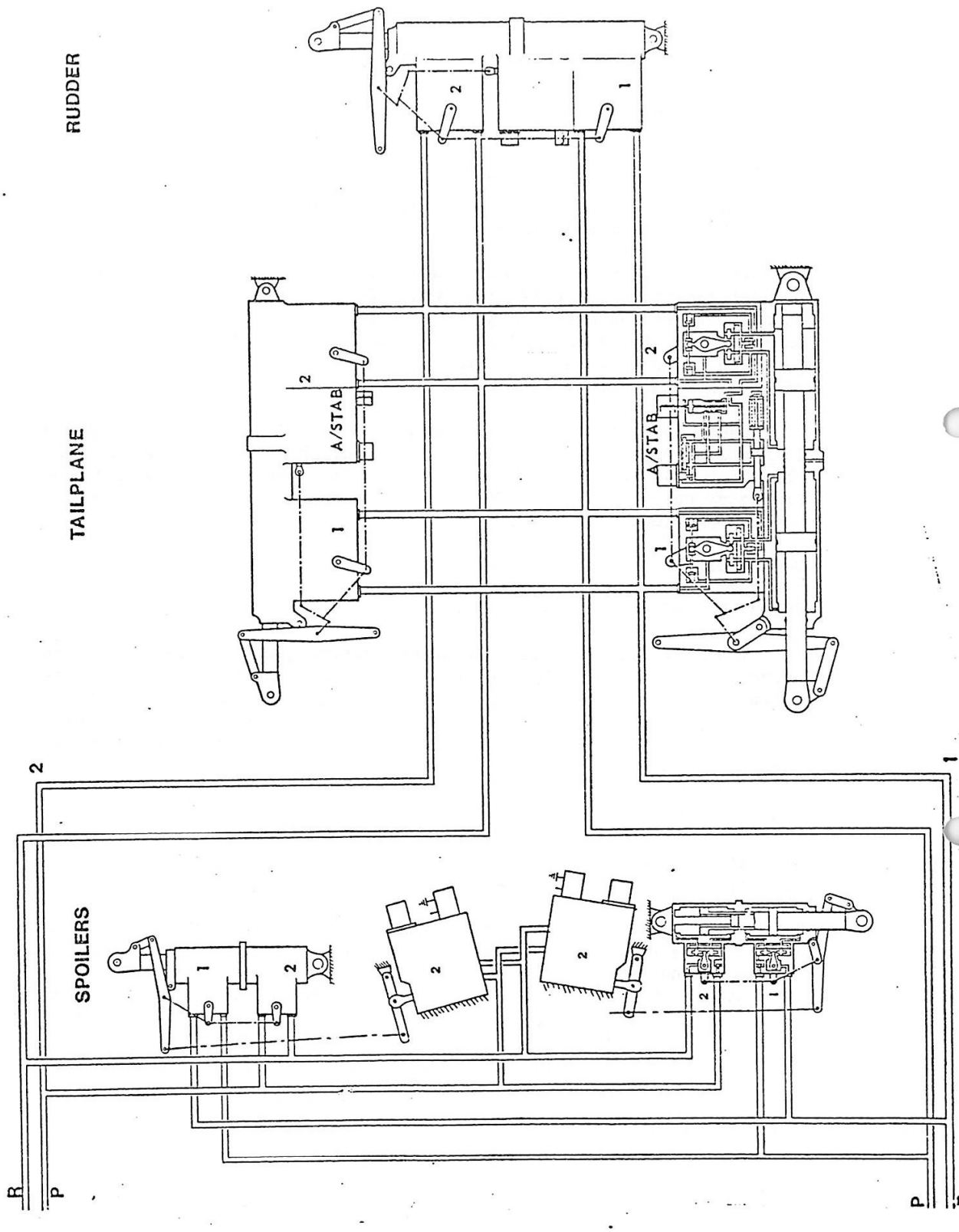

FIG. 1 HYDRAULIC POWER CONTROLS SCHEMATIC.

1.3. Operation.

Under normal operating conditions movement of the torque shaft by the aircraft control column or rudder bar selects the servo valves to operate both sections of the unit to move the control surfaces in the desired sense under the full power output of the jacks. In the event of failure of one source of power supply, the affected half of the unit will effectively become inoperative, but the unit will continue to operate on the 'live' section, The power output of the unit under these conditions is slightly less than half that available when both sections of the unit are operative.

The limited authority auto-control system (incorporated in No.1. system for Rudder operation and No.2. system for Tailplane operation) is added as a series link by providing an auto-control actuator built integrally into the main P.F.C.U. The pilot's signal is felt at one end of a summing lever and the auto-control signal at the other end through a miniature jack actuated by the auto-stabiliser package. A summing of the two signals is fed forward into the main servo valve and thereby demands a position of the control surface.

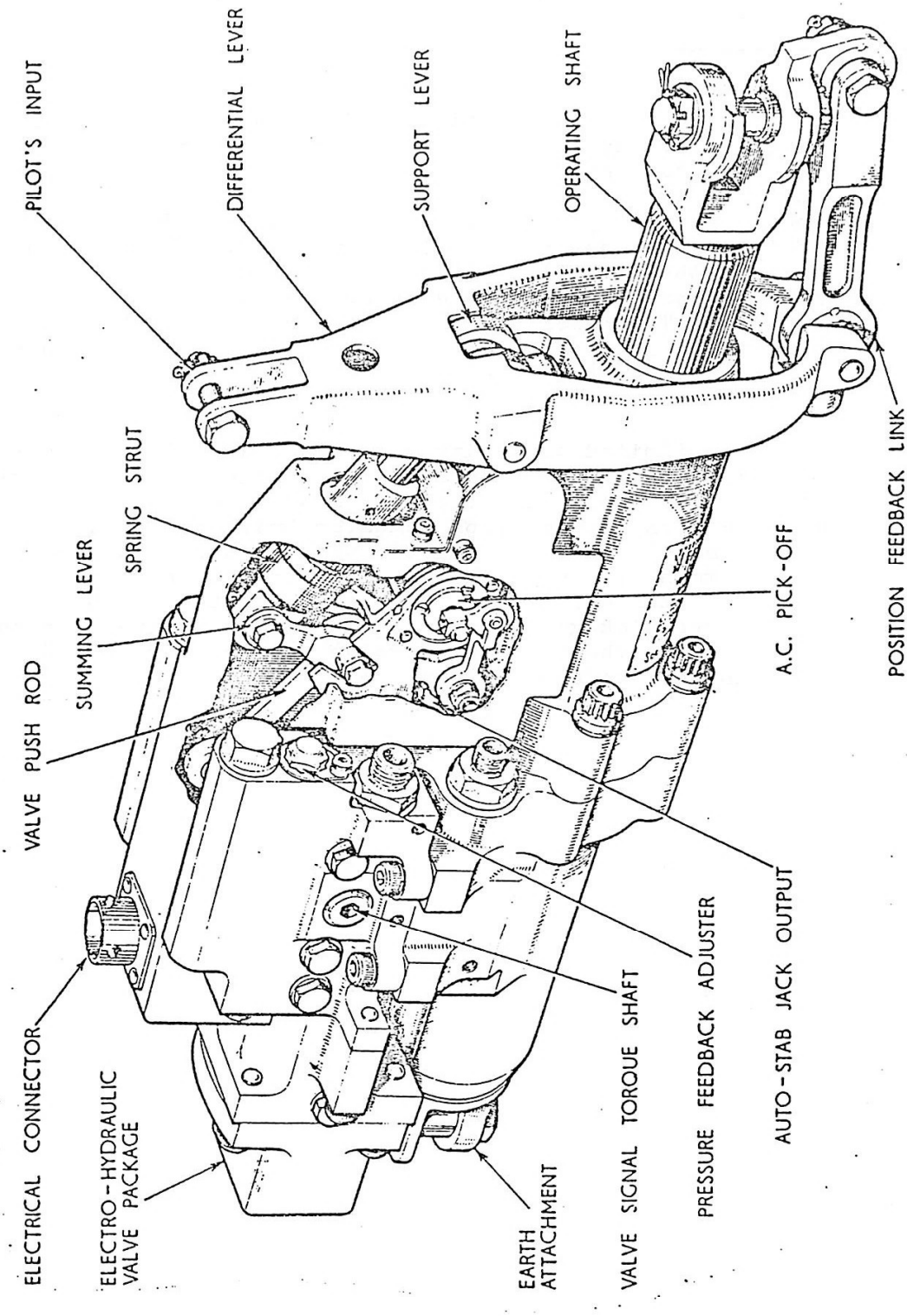

FIG. 2 RUDDER P.F.C.U.

2. RUDDER P.F.C.U.

2.1. Main Jack Assembly.

The rudder control unit is a tandem jack, having two pistons on a common ram, operating in independent cylinders.

The tandem jack cylinders are formed from two bodies, a centre joint piece and an extension end. The two bodies are bolted together, and entrap the centre joint piece forming two cylinders separated hydraulically by two sets of seals with a gland between them vented to atmosphere which, should one seal fail, prevents inter-connection between systems.

The main jack section forms an UNBALANCED jack, the chamber nearest the airframe attachment lug end having a larger area than the other three chambers. A balancing piston is fitted in order to minimise this difference. One end of this piston is screwed into the extension end and the piston head slides in a bore inside the main ram.

* The jack body is earthed to the aircraft structure and the main ram-end operates the rudder control surface. The cylinder at the earth end of the jack is operated by No.1. hydraulic system in the aircraft and No.2. system operates the cylinder at the output end. In the event of failure of either hydraulic system, the jack will remain operative on the other system but the maximum output thrust would be reduced by approximately 50%.

2.2. Main Servo Valve and Modulator Assembly.

Both main valves are housed in cavities formed in No.1. Jack Body as a side by side arrangement. Each main valve consists of a steel annular sleeve which slides in a space formed by two flat steel platens and a circular steel spacer. The working surfaces of the platens and sleeve are optically flat, as are the faces of the spacer. The height of the sleeve and the spacer are arranged to provide a controlled clearance between the sleeve and the platens.

The valve is of the semi-balanced single delivery type, i.e. pressure fluid is passed to the space surrounding the sleeve, and identical ports in the bottom platen allow it to pass downwards through to the individual jack chambers as selected. A single hole in the centre of the top platen allows return fluid to pass from the centre of the sleeve away to the aircraft return system. The operating faces of the sleeve are finely stepped in such a way as to provide vertical centring forces hydraulically acting on the sleeve, to maintain its position centrally within the working clearance. This prevents metallic contact between the sleeve and platens during operation, thus, not only providing minimum wear, but light valve breakout loads. The identical ports in the bottom platen are just covered by the sleeve when in its central position and are connected hydraulically to either jack chamber by small tubular connecting pieces. The main valve internal parts are retained in their housing by the modulator assembly, which is bolted onto the main jack.

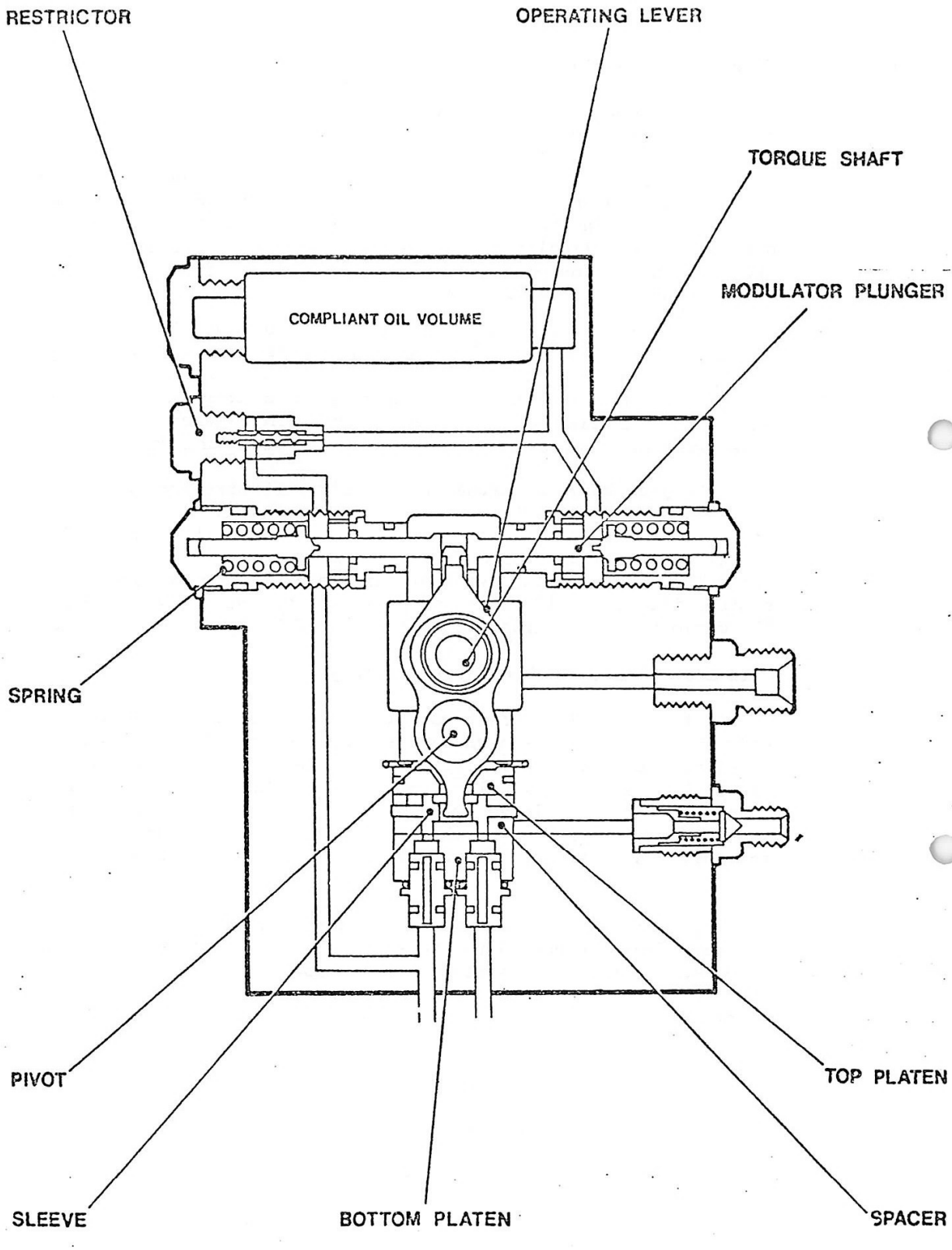

FIG. 3 MAIN SERVO VALVE MODULATOR ASSEMBLY.

2.2. (contd).

The modulator assembly carries an input torque shaft, a pivot is provided which supports an operating lever, the upper end of which engages with a carriage whose extremeties form pressure feedback plungers. These plungers abut spring guides which, with their individual springs, positively locate the upper end of the lever. The lower end of the lever fits closely into the centre of the valve sleeve. When the sleeve is centrally positioned on the bottom platen, the ports connected to the jack chambers are covered, the valve is in its neutral position and no appreciable flow takes place. A pressure exists, however, which is approximately equal in all jack chambers to approximately half the normal system pressure. This pressure is referred to as 'base' pressure. To produce jack retraction, the valve sleeve is displaced to the right by operation of the input torque shaft. Fluid at high pressure is then permitted to flow from the spaces surrounding the sleeve through the left-hand port which is connected to the retraction chamber. Fluid from the right-hand chamber passes through to the right-hand cavity formed by the sleeve and enters the return fluid cavity in the top platen.

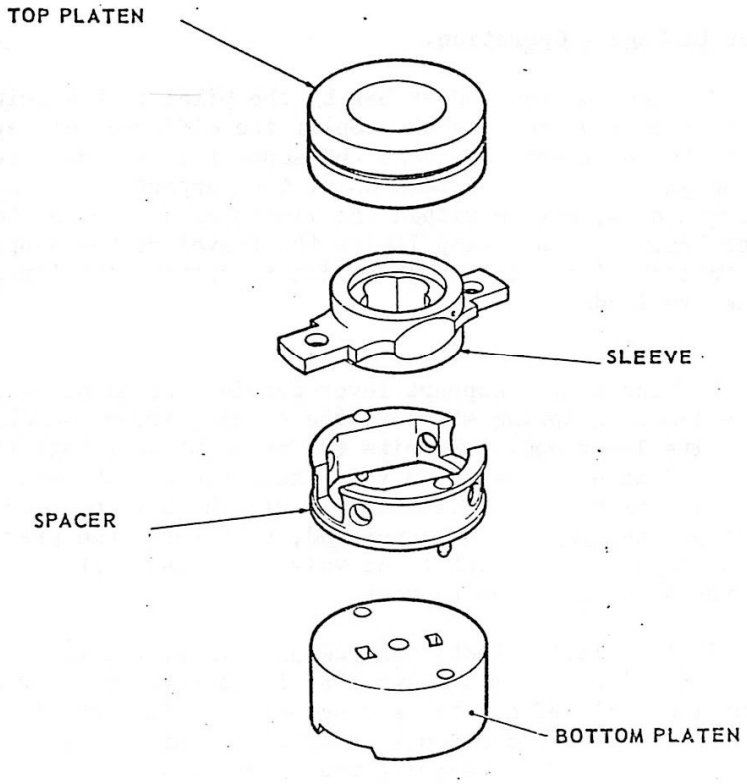

FIG. 4 MAIN VALVE COMPONENTS.

2.3. Input Linkage.

Rotation of the valve torque shaft in response to Pilot's demand is provided by an operating arm in the form of a crank. At the upper end it is connected by a push rod to the mid-point of a summing lever. The push-rod carries a stop operating within the fork of a bracket attached to the valve body; this limits valve travel and thus jack rate. The summing lever carries to the main valve the sum of the demands made by both the Pilot and the autostabilisation system. At its lower end, it is connected to the auto control jack, and for the time being we can consider this point to be fixed.

The upper end of the summing lever joins a spring strut which is in turn connected to a support lever pivoted to the jack body. At the junction of the spring strut and support lever a bolt passes right through a further differential lever, connecting all three together through bushes and a bearing.

The differential lever is connected at its lower end to the jack ram eye-end by the position feedback link which returns the valve to neutral when the pilot's demand is satisfied. The bifurcated differential lever passes around the jack body and is connected to the pilot's control.

2.4. Input Linkage - Operation.

Movement of the rudder bar by the pilot is transmitted via the airframe control rods to the top of the differential lever. Pivoting about its lower end, it rocks the support lever about its attachment to the jack body. An extension of the support lever carries a strength stop, moving within the limits of a hole in the support lever bracket. This stop limits the travel of the support lever and thus carries pilot input forces to protect the linkage from excessive loads.

Rocking of the support lever carries the pilot demand via the force-limiting spring strut to the summing lever, which, by pivoting about its lower end, transmits the movement to rotate the torque shaft and make the required valve selection. Movement of the jack ram will carry the differential lever, which is now pivoting about the input bearing at its upper end, to reverse the previous motion of the input linkage until the valve returns to its neutral position and the jack ram comes to rest.

If the pilot selects maximum jack rate, the rate stop comes into operation to limit valve travel. Any further movement of the input rod will deflect the spring strut until such time as the strength stop on the support lever comes into play, preventing excessive loads from damaging the input linkage.

2.2. (contd).

The modulator assembly carries an input torque shaft, a pivot is provided which supports an operating lever, the upper end of which engages with a carriage whose extremeties form pressure feedback plungers. These plungers abut spring guides which, with their individual springs, positively locate the upper end of the lever. The lower end of the lever fits closely into the centre of the valve sleeve. When the sleeve is centrally positioned on the bottom platen, the ports connected to the jack chambers are covered, the valve is in its neutral position and no appreciable flow takes place. A pressure exists, however, which is approximately equal in all jack chambers to approximately half the normal system pressure. This pressure is referred to as 'base' pressure. To produce jack retraction, the valve sleeve is displaced to the right by operation of the input torque shaft. Fluid at high pressure is then permitted to flow from the spaces surrounding the sleeve through the left-hand port which is connected to the retraction chamber. Fluid from the right-hand chamber passes through to the right-hand cavity formed by the sleeve and enters the return fluid cavity in the top platen.

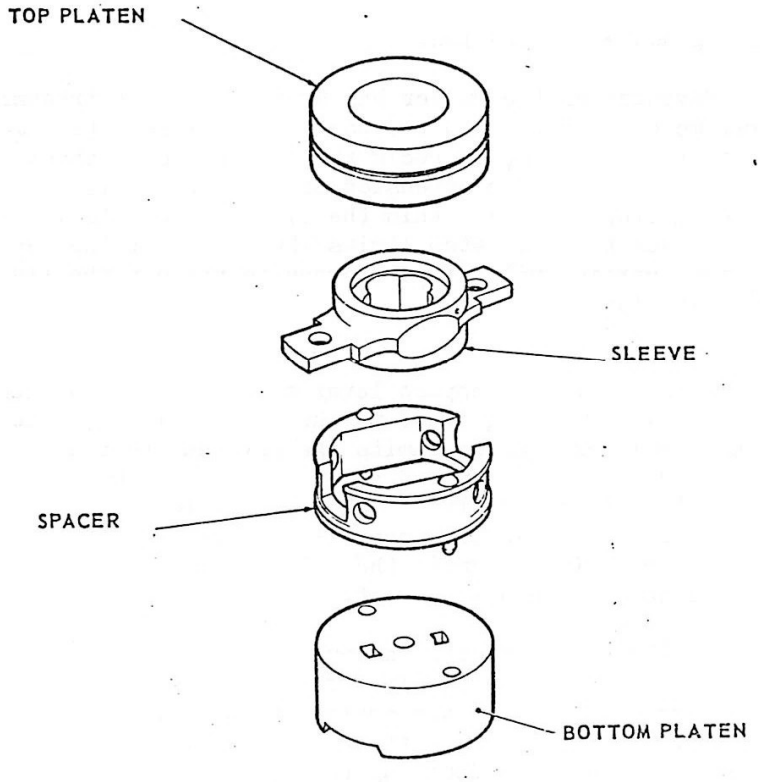

FIG. 4 MAIN VALVE COMPONENTS.

2.3. Input Linkage.

Rotation of the valve torque shaft in response to Pilot's demand is provided by an operating arm in the form of a crank. At the upper end it is connected by a push rod to the mid-point of a summing lever. The push-rod carries a stop operating within the fork of a bracket attached to the valve body; this limits valve travel and thus jack rate. The summing lever carries to the main valve the sum of the demands made by both the Pilot and the autostabilisation system. At its lower end, it is connected to the auto control jack, and for the time being we can consider this point to be fixed.

The upper end of the summing lever joins a spring strut which is in turn connected to a support lever pivoted to the jack body. At the junction of the spring strut and support lever a bolt passes right through a further differential lever, connecting all three together through bushes and a bearing.

The differential lever is connected at its lower end to the jack ram eye-end by the position feedback link which returns the valve to neutral when the pilot's demand is satisfied. The bifurcated differential lever passes around the jack body and is connected to the pilot's control.

2.4. Input Linkage - Operation.

Movement of the rudder bar by the pilot is transmitted via the airframe control rods to the top of the differential lever. Pivoting about its lower end, it rocks the support lever about its attachment to the jack body. An extension of the support lever carries a strength stop, moving within the limits of a hole in the support lever bracket. This stop limits the travel of the support lever and thus carries pilot input forces to protect the linkage from excessive loads.

Rocking of the support lever carries the pilot demand via the force-limiting spring strut to the summing lever, which, by pivoting about its lower end, transmits the movement to rotate the torque shaft and make the required valve selection. Movement of the jack ram will carry the differential lever, which is now pivoting about the input bearing at its upper end, to reverse the previous motion of the input linkage until the valve returns to its neutral position and the jack ram comes to rest.

If the pilot selects maximum jack rate, the rate stop comes into operation to limit valve travel. Any further movement of the input rod will deflect the spring strut until such time as the strength stop on the support lever comes into play, preventing excessive loads from damaging the input linkage.

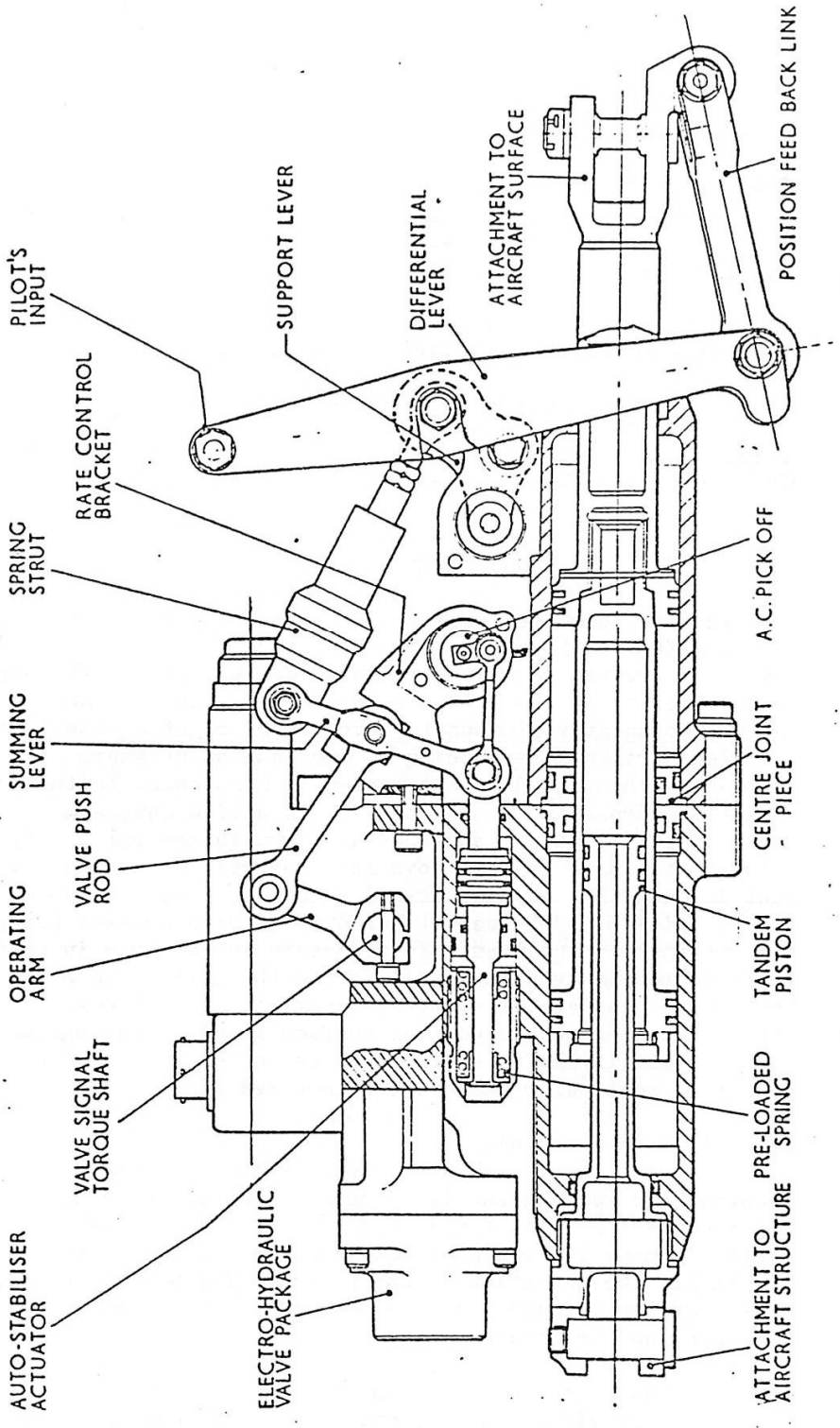

FIG.5 GENERAL ARRANGEMENT OF RUDDER P.F.C.U.

2.5. Pressure Feedback.

If a jack without provision for pressure feedback experiences a compressive output load, the pressure in the extension chamber rises and that in the retraction chamber falls. The differential pressure thus created across the piston produces an output force to react to the applied load. A similar but opposite effect would occur in the case of a tensile output load. Any movement of the jack produced by these loads would tend, by transmission to the valve input, to resist the loads, the jack then exhibiting infinitely stiff characteristics and possible instability, especially in the case of fluctuating or oscillatory loads.

The introduction of pressure feedback which is only fully operative when there is a 'no flow' condition across the restrictor orifice (described in the following paragraph - Low frequency Blocking) alter these characteristics.

2.6. Pressure Feedback - Operation.

The left-hand feedback module chambers are directly connected to the left-hand jack chambers. An increase in pressure, for instance, created by a tensile jack load (of an oscillatory load) is transmitted to the left hand modulator chambers causing the feedback modulator pistons to move to the right against their centring springs, there being no increase of pressure felt in the right-hand chambers due, as previously mentioned, to the 'no flow' condition across the restrictor. This action causes movement of the valve operating levers and thus a change in the valve datum, allowing the main jack to move in a controlled fashion. This movement is such that in the face of a tensile force the jack extends, i.e. it yields under load, the amount of displacement being proportional to the load. This feature is valuable in that it gives increased dynamic stability and the ability to share loads between the tandem halves of the jack; it also allows the unit to act as a damper on the control surface itself. Any malfunction of the auto-stabilisation system such as an oscillatory run-away condition would also therefore be catered for.

2.7. Low Frequency Blocking:

The pressure feedback system is exceptionally powerful and would normally cause a reduction in control sensitivity. Consequently, a further facility has been incorporated into the system to make it frequency-concious. A device has been included to inhibit the operation of the pressure feedback modulator under static or low frequency load conditions, gradually losing its influence as the frequency rises. It takes the following form:-

The two spring cavities in the feedback system are connected together via a fine restrictor, one chamber also being connected to a large cavity in the head of the modulator body containing fluid to provide a compliant oil volume; the arrangement is duplicated to cater for both systems.

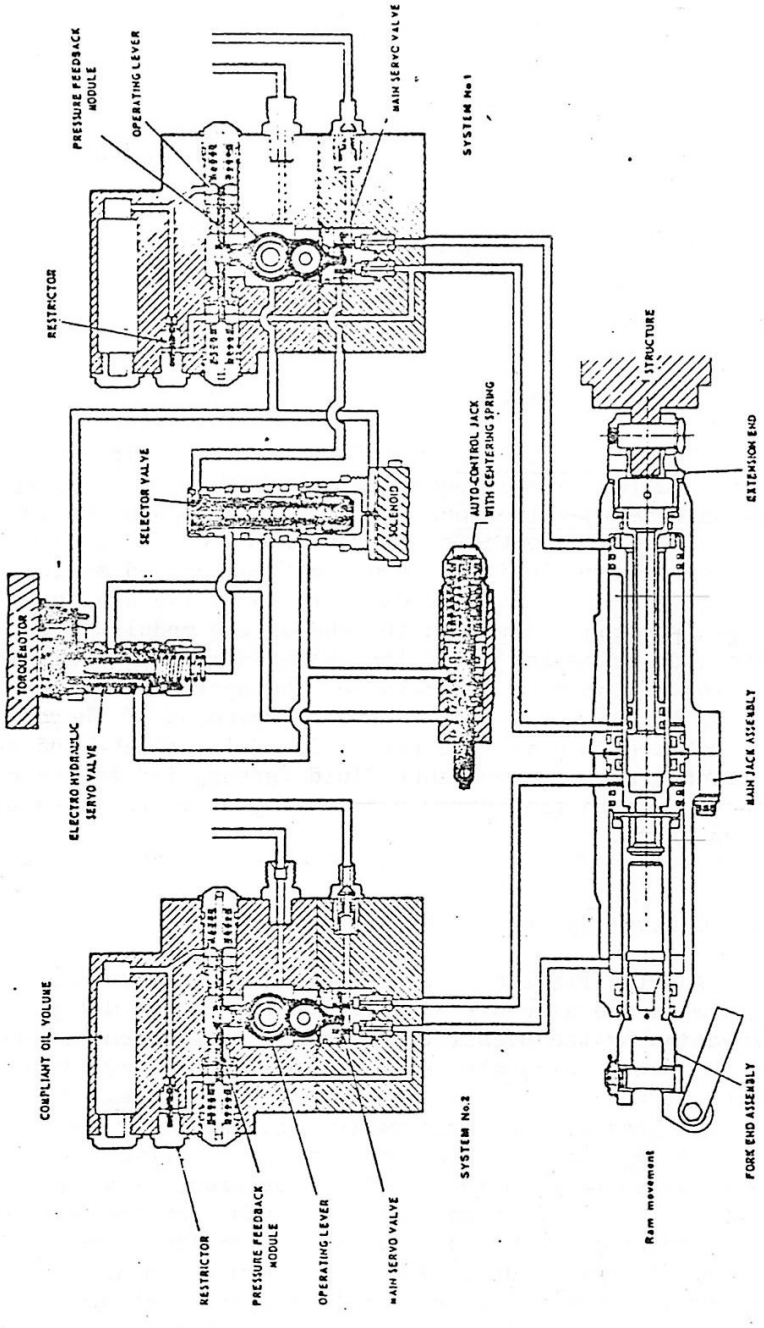

FIG. 6 RUDDER P.F.C.U. DIAGRAMMATIC.

2.7. (contd).

The compliant oil volume is included because the spring chamber with which it is associated is no longer connected directly to the main jack chamber, and would otherwise interfere with the operation of the fine orifice.

2.8. Low Frequency Blocking - Operation:

As the surface load frequencies increase, the fine orifice will become unable to transmit the pressure fluctuations thereby producing a differential pressure in the modulator chambers resulting in the pressure feedback becoming operative. This facility referred to as Low Frequency Blocking, produces a fully flexible pressure feedback at about 20 hertz which is approximately the resonant frequency of the aircraft control system.

2.9. Auto-Control System.

The auto-control piston is housed in a bore in the jack platform parallel to and above the main jack bore, passing between the two main servo-valve housings, with the eye-end of the auto-control piston being connected to the lower end of the summing lever, as previously described. A torque motor-operated servo valve (auto-control valve) and a solenoid selector-valve are contained in a single housing mounted on the end of the modulator body above the main jack extension end. The auto-control valve is miniature version of the main servo-valve, the operating arm engaging a crank on the torque motor shaft; angular movement of the shaft produces the required Linear movement of the valve sleeve and secondly, the auto-control valve pressure fluid is supplied to the centre of the sleeve, not to the surrounding cavity as in the case of the main servo valve.

2.10. Auto-Control System - Operation.

An electrical command signal from the auto-stabilisation system in the aircraft will rotate the torque motor in the required direction by the prescribed amount. This movement, when transferred to the servo valve sleeve, will direct pressure fluid to one or other of the auto-control jack chambers. Movement of the auto-control jack will be transmitted via the lower end of the summing lever to produce a selection at the main servo valves allowing the jack ram to take up the required position. Movement of the auto-control jack will be measured by a position transducer attached to the rate stop bracket and linked to the lower end of the summing lever. This transducer is in the form of an A.C. pick-off, supplied electrically from the auto-stabilisation system which registers the position of the auto-control jack and provides an electrical feedback to the computer.

When the Auto-control jack has provided the required correction in response to auto-control demand, the signal to the torque motor will be cancelled and will, by means of inherent magnetic stiffness,

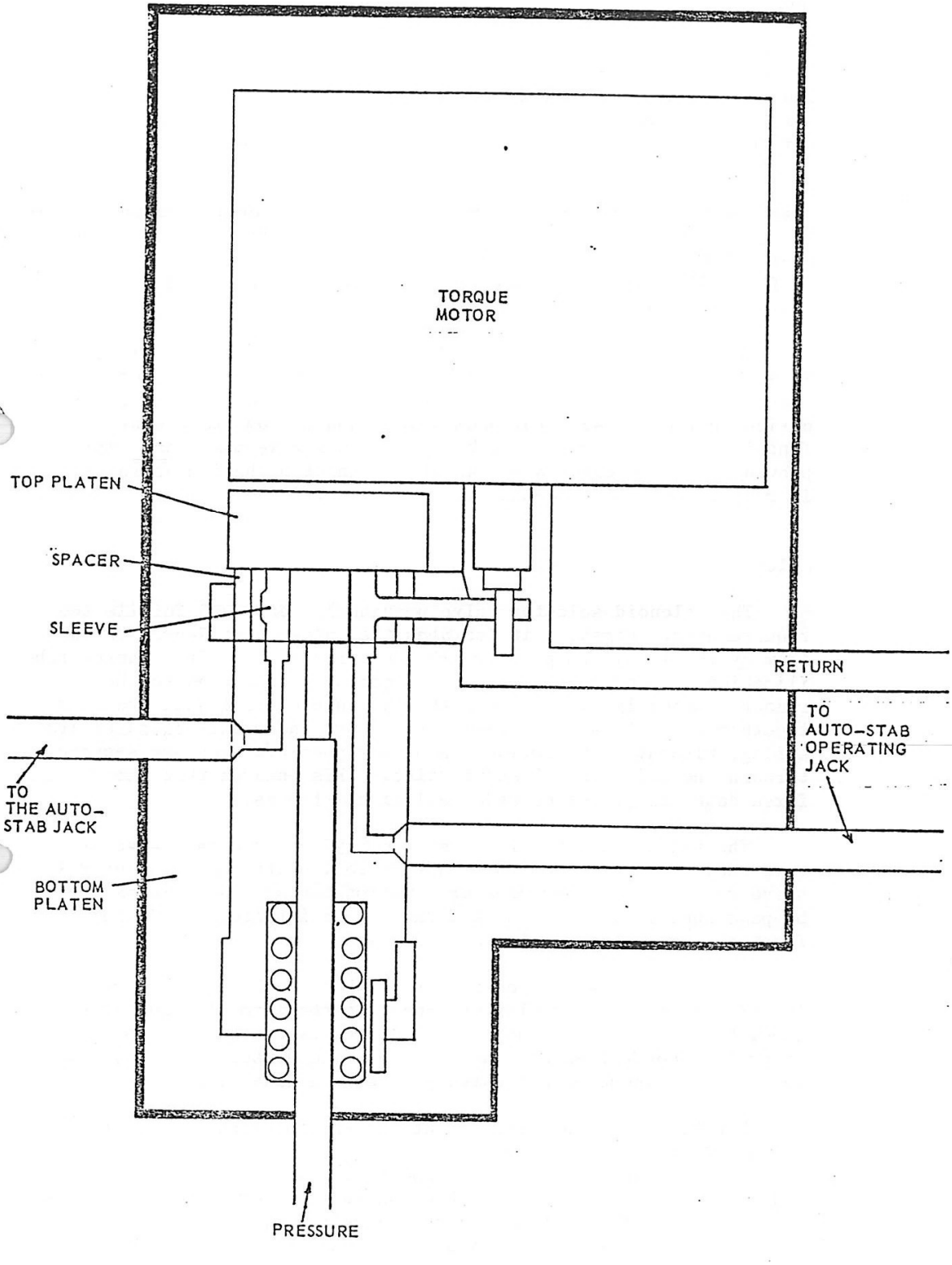

FIG. 7 ELECTRO-HYDRAULIC SERVO VALVE

2.10. (contd).

return the auto-control servo valve to its neutral position. The auto-control jack is returned to mid-stroke by the centring spring thus reversing the selection of the main servo valves to neutral position. Electrical feedback is provided then by the A.C. pick-off and mechanical feedback by the differential lever.

The auto-control jack stroke is designed to give the yaw auto-stabilisation system a maximum authority of ± 3 degree rudder travel throughout its overall range of movement. It will be seen, therefore, that, although auto-control commands are either added to or subtracted from pilot demands by the summing lever, the pilot can easily overcome such commands if he wishes.

The auto-control system is supplied with pressure fluid from No.1. Hydraulic system; should No.1. system fail, or the auto-stabilisation system be switched off, a pre-loaded spring centring device in the auto-control jack which, apart from its operation function, will return the jack to its mid-stroke position. This provides a fixed datum about which the input mechanism operates in response to manual demand from the pilot.

2.11. Solenoid Selector Valve.

The solenoid selector valve previously mentioned fulfils two requirements. Firstly, it isolates the auto-control servo valve from hydraulic system pressure when not required, so that auto-stabilisation command signals can no longer be transmitted to the rudder. Secondly, it connects the two auto-control jack chambers together so that jack can return to centre under the action of its spring, without being influenced by any possible pressure seepage through the auto-control servo valve. This ensures that the fixed datum is preserved under all circumstances.

The valve consists of a piston carrying a conical valve at each end. The first of these serves to isolate the auto-control servo valve from system pressure, whilst the second performs the by-pass function; since the two valves are interconnected the two functions are automatically synchronised.

The piston has a bleed path through its hollow centre consisting of a cascade of annular orifices, in the form of a number of steel balls held in the bore. The diameters of balls and bore are accurately controlled and there is no fixed number of balls, each valve being assembled selectively to give a fixed leak rate.

The bleed path permits oil at the pre-set leak rate to enter a control chamber at the other end of the piston. When the solenoid is de-energised this oil can escape to return past a small ball valve, and as the pressure in the control chamber drops, so system pressure moves the piston towards the solenoid, thus seating the first conical valve which isolates the servo valve.

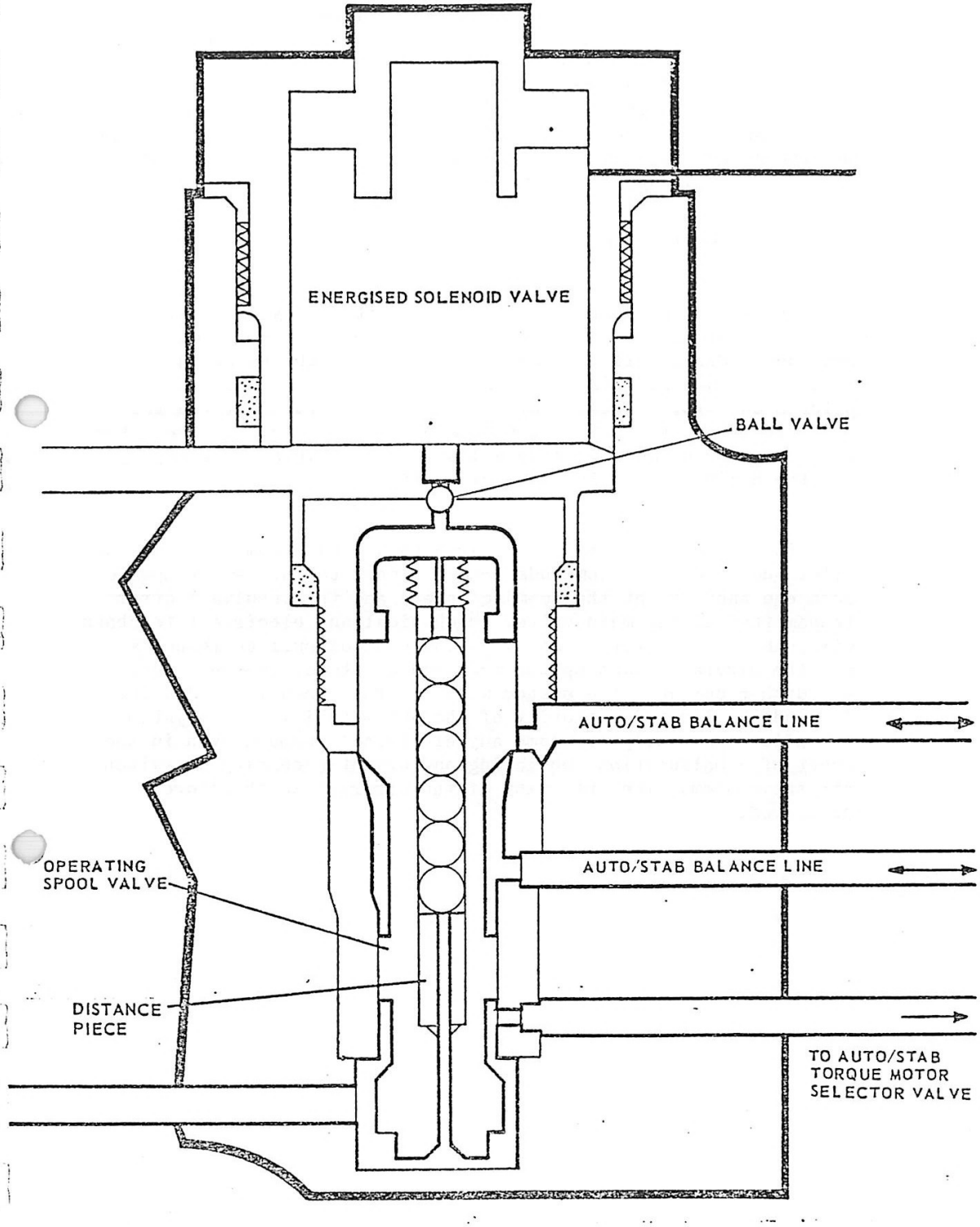

FIG. 8 AUTOSTAB SOLENOID SELECTOR VALVE.

2.12. Solenoid Selector Valve - Operation.

When the solenoid is energised the control ball valve is mechanically driven on to its seat and the pressure in the control chamber rises. The selector piston has a larger diameter at this end and is therefore actuated until the by-pass conical valve seats, thus isolating the two ends of the auto-control jack from each other. At the same time the pressure isolating conical valve will be lifted from its seat to admit high pressure oil to the servo valve. The auto-control system can now function.

2.13. Auto-stabilisation System.

The system consists of a computer unit fed by rate gyros for the pitch roll and yaw channels. Auto-stabilisation selector switches - Pitch Roll and Yaw - which control the power supplies to the indivual P.C.U's are located on the port console in the pilot's cockpit. Closing of the Yaw switch provides, via the aircraft computer, a 28 volt D.C. supply to the solenoid selector valve and torque motor. Also a 115 volt 400 c.p.s. A.C. supply for the excitation of the A.C. pick-off.

It can be seen from the diagram that manual demands from the pilot and electrical commands from the computer are superimposed upon one another (at the summing lever) and the resultant error transmitted to the main valve. Mechanical and electrical feedback will cancel the error signal when the control surface responds and the aircraft takes up the required attitude; in the absence of further commands the system will return to neutral. Bearing in mind the limited authority of the auto-stabilisation system, the pilot can easily overcome any electrical command even in the event of a malfunction, obviating any urgent necessity to switch off the system. The integrity of the aircraft is therefore preserved.

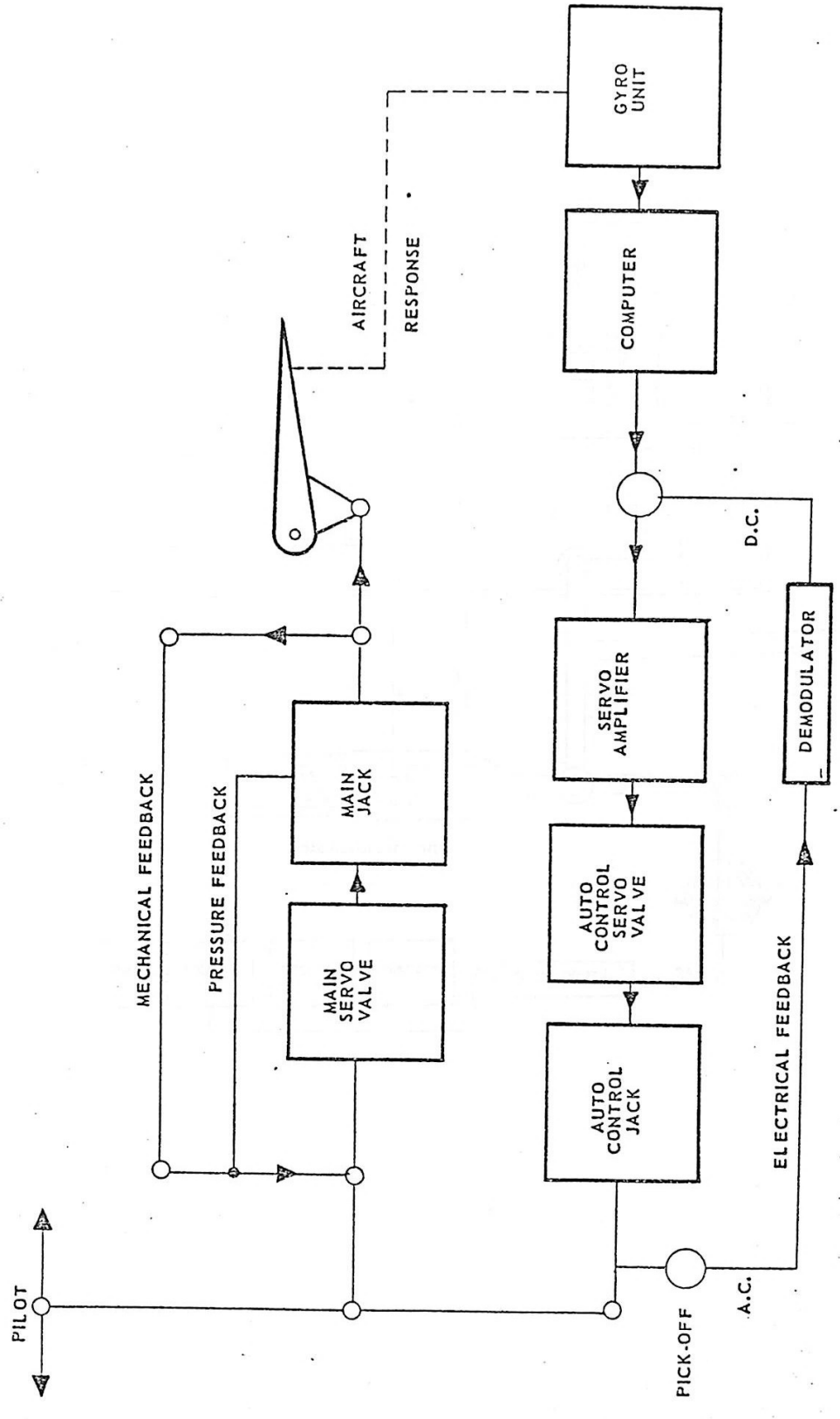

FIG. 9 A/STABILISATION BLOCK DIAGRAM

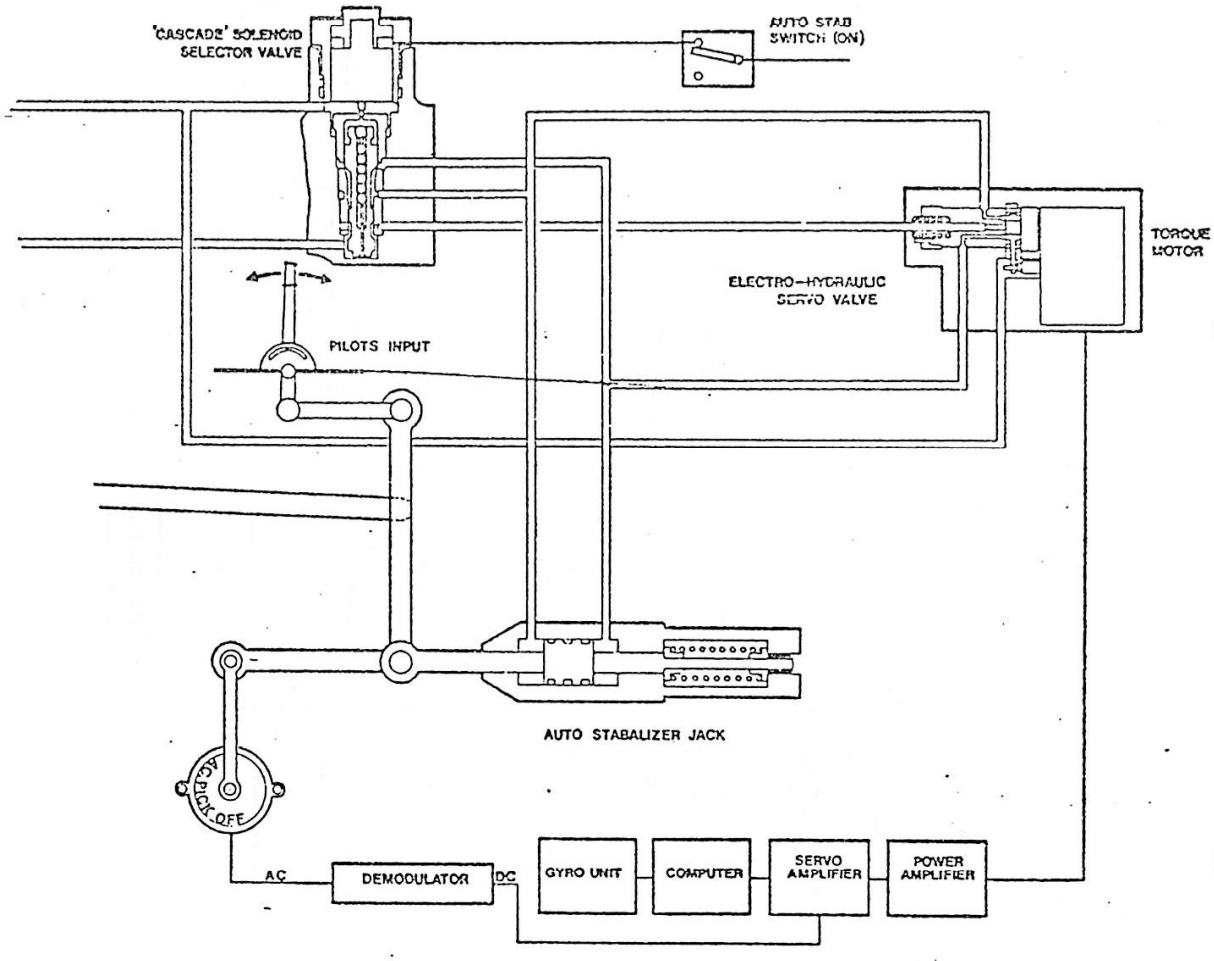

FIG. 10 RUDDER & TAILPLANE P.F.C.U. A STAB DIAGRAMATIC CIRCUIT.

3. TAILPLANE POWER FLYING CONTROL UNIT.

3.1. Introduction.

The construction and operation of the Tailplane control is essentially the same as the Rudder control.

The major difference is that the Low Frequency Blocking facility has been removed. This does not, however, affect the operation of the Pressure Feedback as the left and right hand module chambers are connected direct to their respective Jack chambers. Any increase in pressure in either jack chamber will now be felt only at the respective module chamber instead of passing through the restrictor as in the case of the Rudder unit.

The main jack is different in that it is a fully balanced layout. The inclusion of a tailshaft on No.2. piston head, stroking through the jack extension end eliminates the necessity for a balancing piston.

The only other basic difference is the inclusion of a Pre-tensioning spring as a backlash eliminator. The pre-tensioning spring is single acting but the tailplane input circuit is rigged to allow the spring forces in the tailplane jack inputs to balance one another. This backlash elimination affects the input linkage of each of the two Tailplane jacks and ensures that they act together in a synchronised fashion.

3.2. Description.

Each control unit comprises a main jack assembly, a servo valve and modulator assembly incorporating pressure feed back, an auto-control unit assembly embodying a solenoid selector valve and torque motor operated valve and a lever and linkage system which includes an electrical position pick-off. The main body of the unit carries at one end a fork-end which is anchored to the aircraft structure, while at the other end of the unit, the main jack ram carries an eye end which is secured to the tailplane control surface operating lever; when the unit is operated, the main unit assembly remains stationary, the main jack operating ram moving relatively.

3.2.1. Main jack assembly.

The assembly comprises a body formed of two separate cylinders bolted together at a central flange and having tandem pistons on a common ram housed in the cylinders formed in the body. The cylinders, each containing one of the two pistons, are separated hydraulically by a centre joint piece having two sets of seals. A space formed between the two external seals is vented to atmosphere, thus, should failure of one of the seals occur, inter-connection of the two cylinders is prevented by the atmosphere vent. The main jack body is secured to the aircraft structure through a fork-end known as the earth fork, and a bolt, nut and locking device. At the other end of the unit, the main jack terminates in an eye-end which is secured to the tailplane operating lever. The piston at the earth fork end of

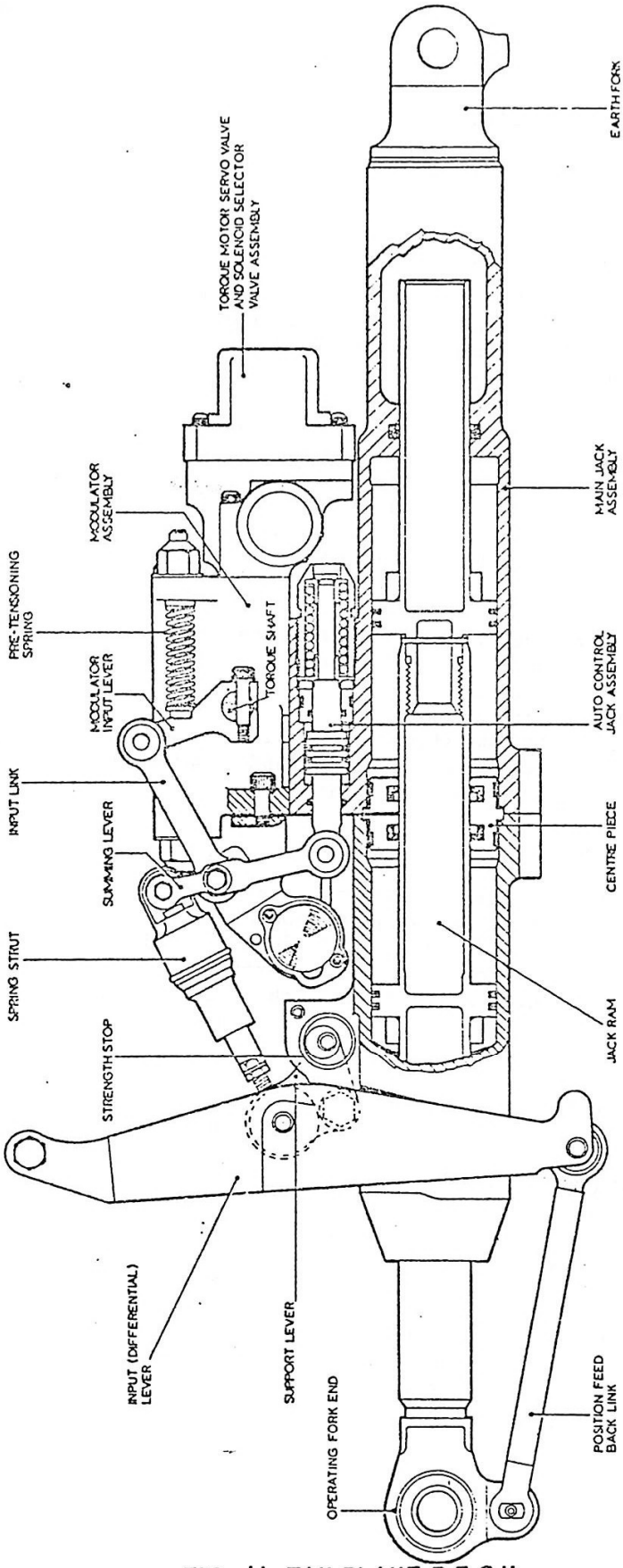

FIG. 11 TAILPLANE P.F.C.U.

3.2.1. (contd).

the unit is operated by the No.2 hydraulic system in the aircraft, while No.1 system operates the piston at the output end. In the event of failure of either hydraulic system, the jack will remain operative on the second system, but the output thrust will be reduced.

3.2.2. Servo valve modulator assembly.

Servo valves: - The two main servo valves are housed in bores in the No.2 jack body. Each valve consists of a steel annular sleeve which operates in a space formed by two flat steel platens and a circular steel spacer. The working surfaces of the platens, sleeve and spacer are lapped to optical flatness. The valves are of the semi-balanced, single delivery type, that is, pressure fluid is passed to a space surrounding the sleeve, and ports in the bottom platen allow it to pass downwards to the individual jack chambers as selected. A single hole in the top platen permits return fluid to pass from the centre of the sleeve to the aircraft return system. The operating faces of the sleeve are finely stepped to provide vertical centring forces hydraulically acting on the sleeve so as to maintain its position centrally within the working clearance. This arrangement prevents metallic contact between the sleeve and the platens during operation, thus, not only ensuring minimum wear, but light valve movement loads. When in its central or 'neutral' position, the sleeve just covers the two ports in the bottom platen which are connected hydraulically to each chamber of the main jack by small tubular connecting pieces. To produce movement of the jack, the valve sleeve is displaced by operation of the layshaft and hydraulic fluid at high pressure is then permitted to flow to the jack unit. Fluid displaced by movement of the jack is returned to the cavity formed by movement of the sleeve and enters the return fluid cavity in the top platen. The main servo valve internal parts are retained in their bores by the valve and modulator assembly which is bolted to the main jack body.

Modulator assembly: - The modulator body comprises a single machined casing which houses all the modulator assembly components. An input layshaft is carried transversely in the body and supports two operating levers the ends of which engage with a carriage having feed-back plungers formed on its extremities. These plungers abut spring guides which, through the action of their respective springs, positively locate the upper ends of the levers. The other ends of the operating levers are a close fit in the centre of the main servo valve operating sleeves.

Pressure feedback: - To obviate stiffness in jack operation, and to prevent jack instability in the case of fluctuating or oscillatory loads on the tailplane control surfaces, a system of pressure feedback to the modulator assembly operating levers is incorporated. The pressure feed-back module and plungers are directly connected with the jack chambers. Should an increase in pressure be felt in the jack chambers due to excessive load on the

3.2.2. (contd).
control surfaces, this rise in pressure will be transmitted to the pressure feed-back plungers which will move against their centring springs to cause movement of the valve operating levers which, pivoting about the torque shaft, will change the position of the servo valve permitting the jack ram to move in a controlled manner. This arrangement provides for dynamic stability in the system with the ability of load sharing between the tandem halves of the jack. An additional advantage gained is that the unit also acts as a damper for the control surface.

3.3. Auto Control System.

The auto-control system comprises an auto-control jack, a solenoid selector valve, a torquemotor operated valve and an auto-control pick-off. The auto-control jack is housed in a bore in the main jack platform and consists of a spring loaded piston actuated through hydraulic fluid by selection of the torquemotor operated servo valve. The eye-end of the auto-control piston ram is connected to the lower end of the summing lever (see Levers and Linkage). The torquemotor operated servo valve and solenoid selector valve are contained in a single housing secured to the end of the modulator body.

3.3.1. Solenoid selector valve.

The solenoid selector valve comprises a piston carrying a conical valve at each end. One valve serves to isolate the torquemotor servo valve from the pressure system, while the second conical valve controls a by-pass circuit in the auto-control jack. Since the two valves are inter-connected by the piston, their functions are synchronous. The hollow centre of the piston forms a bleed path, the leak rate of which is controlled by a number of steel balls contained in the bore. Each valve is selectively assembled to give a fixed bleed rate. A control chamber is formed at the solenoid end of the unit and is open to return past a small ball valve which is controlled by the solenoid.

3.3.2. Torquemotor operated valve.

The valve in the form of a servo valve is constructed in a similar manner to the main servo valves but is small in dimensions. The valve operating arm engages with a crank on the torquemotor shaft. In its 'neutral' position the valve just closes two ports interconnected via the bottom platen to the auto-control jack. Angular movement of the torquemotor shaft results in linear movement of the valve sleeve thus permitting fluid to flow to one side or the other of the auto-control jack. Unlike the main servo valves, pressure fluid is supplied to the centre of the sleeve and not to a surrounding cavity.

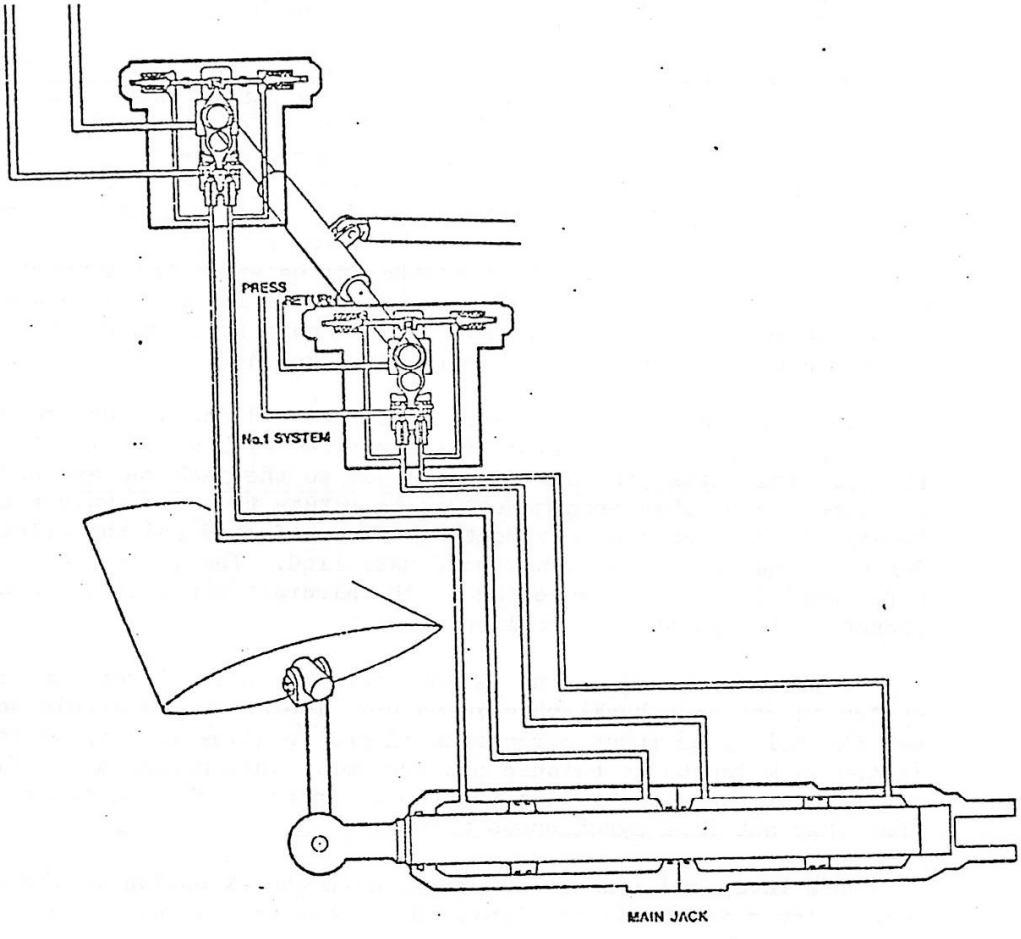

FIG. 12 TAILPLANE P.F.C.U. MAIN SERVO VALVE MODULATOR AND JACK

3.3.3. Levers and Linkage.

Rotation of the valve layshaft in response to pilot's demand is effected by an operating arm, the upper end of which is connected by a push rod secured to the mid-point of a summing lever. The push rod carries a stop which moves within the fork of a bracket attached to the modulator body. The stop limits valve travel and thus the rate at which the jack moves. The stop is known as the 'rate stop' and the bracket as the 'rate stop bracket'.

The summing lever transmits to the main servo valves the sum of the demands made both by the pilot and the aircraft autostabilisation system. At its lower end, the summing lever is connected to the auto-control jack by a pivot bolt, a further link being attached at the same point and connected with the auto-control pick-off. At its upper end, the summing lever is connected to a spring strut which is, in turn, attached to a support lever pivoted to the jack body. At the point of junction of the spring strut and support lever, the two are interconnected with a differential lever by a bolt which passes through all three levers. Bushes and a bearing are incorporated in this lever interconnection arrangement.

The differential lever which is bifurcated and passes around the jack body, is connected at its lower end with a position feed-back link and this link, in turn, is attached to the jack ram eye-end. The function of this arrangement is to return the servo valves to 'neutral' once jack ram movement has been effected and the pilot's demand or autostabilisation demand satisfied. The upper end of the differential lever is connected to the aircraft control rods and thence to the pilot's control column.

A pre-tensioning spring is incorporated in the lever and linkage system to act as a backlash eliminator. The spring is single acting but the tailplane input circuit is rigged to allow the spring forces in the jack inputs to balance one another. This arrangement affects the input linkage of each of the two tailplane jacks and ensures that they act in a synchronous manner.

The lever and linkage assembly, with the exception of the differential lever and feed-back link, is protected by cover plates.

CAUTION:

THESE COVER PLATES MUST NOT BE REMOVED. DISTURBANCE OF THESE COVER PLATES WILL INVOLVE LINKAGE CHECKS REQUIRING SPECIAL TEST EQUIPMENT HELD ONLY BY THE MANUFACTURER.

3.4. Operation.

3.4.1. Pilot demand - Mechanical input.

Movement of the pilot's control column to raise or lower the aircraft nose is transmitted via the airframe control rods to the top of the differential lever. Pivoting about its lower end, the lever moves the support lever about its attachment with the jack body. An extension of the support lever carries a strength stop which moves within the limits of a hole in the support lever bracket. This stop limits the travel of the support lever and thus carries the input forces to protect the linkage from excessive loads.

Movement of the support lever transmits input demand through the spring strut to the summing lever which, by pivoting about its lower end, in turn passes the movement via the input link and input lever to the layshaft. Rotation of the layshaft causes the operating levers to make the required selection of the main servo valves.

Displacement of the servo valves from their 'neutral' position opens ports to the cylinders of the selected sides of their respective main jacks. The resulting jack movement will carry with it the position feed-back link thus reversing the previous motion of the input linkage until the servo valves are returned to their 'neutral' position and the jack ram is again at rest.

Should the pilot select maximum jack rate by rapid input demand, the rate stop in the linkage system comes into operation to limit servo valve travel. Continued movement of the input will cause the spring strut to deflect until such a time as the strength stop on the support lever is effective. This arrangement prevents excessive loading on the input linkage.

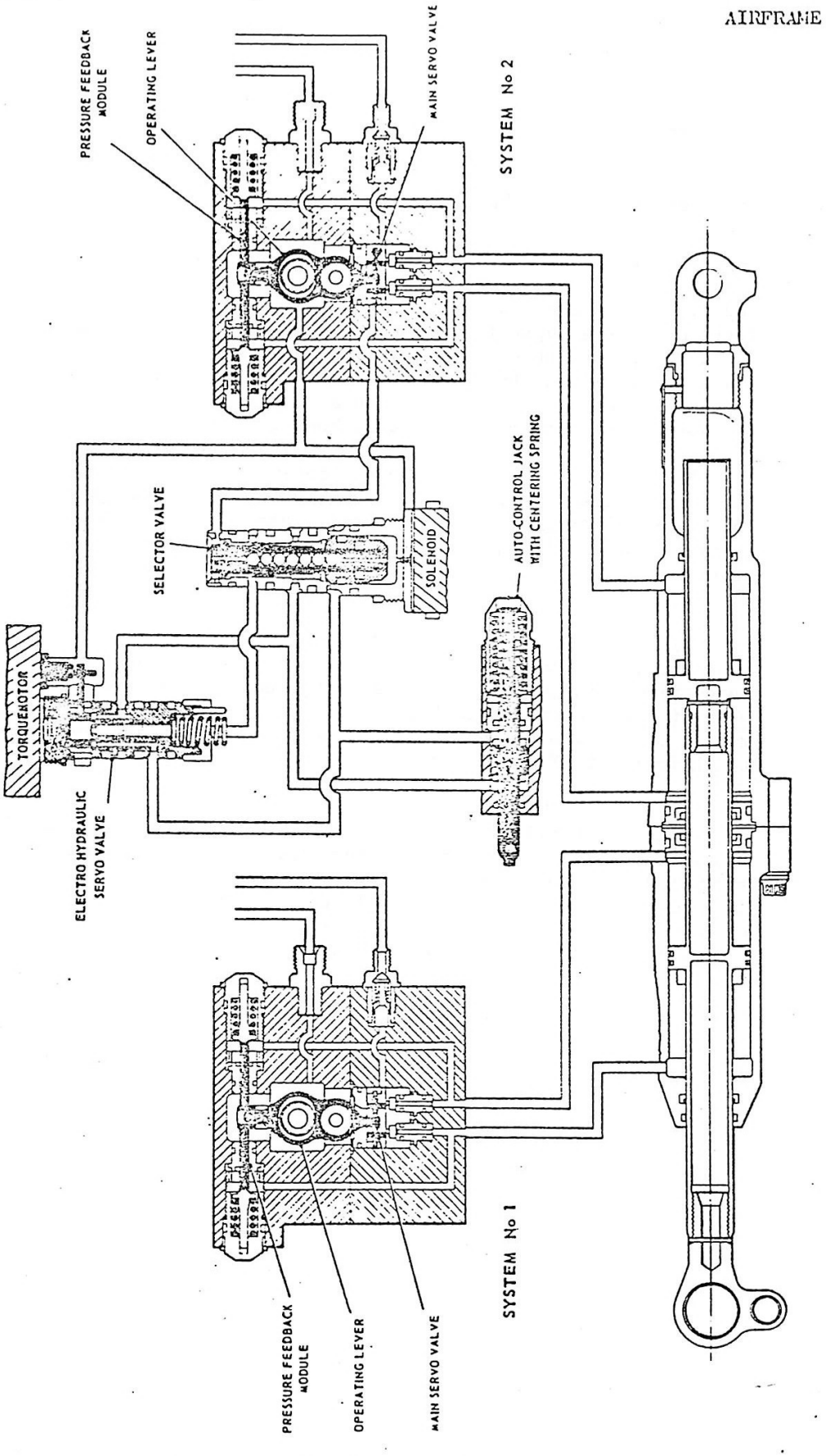

FIG. 13 TAILPLANE P.F.C.U. DIAGRAMATIC

3.4.2. Auto-control system.

The controlling unit of the auto-control system of the tailplane power control unit is the solenoid selector valve. When the solenoid is energised (aircraft autostabilisation system switched 'On') the small ball valve at the base of the selector valve is mechanically driven to its seat by the action of the solenoid. The ball valve now closes the bleed return orifice in the selector valve.

Hydraulic pressure now builds up in the control chamber of the selector valve, and since the selector piston has a larger diameter at the control chamber end, the piston is moved to seat the by-pass conical valve. Closing of the by-pass circuit isolates the two chambers of the auto-control jack from each other. Synchronously, the pressure isolating conical valve will be lifted from its seat to admit high pressure fluid to the torquemotor operated servo valve. The auto-control system of the tailplane control unit is now functional.

Input signals received from the aircraft autostabilisation system by the torquemotor will cause the servo valve to be moved, opening the ports to the bottom platen. Pressure fluid will be admitted to one side or other of the auto-control jack, as selected by the servo valve movement, and the jack will move to act on the summing lever causing alteration in the position of the main servo valves. The resultant will be movement of the main jack as demanded by the aircraft auto-stabilisation system. The movement of the auto-control jack will be monitored by the auto-control pick-off which will feed the information electrically to the autostabilisation computor. When the movement of the main jack has provided the required correction, the input signal to the torquemotor will be cancelled by the computor and the auto-control servo valve will be returned to its 'neutral' position. The auto-control jack is then returned to its mid-position under the action of its centring spring thus reversing the selection passed by ths summing lever to the main servo valves and returning the valves to their 'neutral' position.

When the selector valve solenoid is de-energised (aircraft auto-stabilisation system switched 'Off'), the control ball valve will be moved off its seat by pressure in the control chamber. The bleed orifice now being open, the pressure in the control chamber escapes past the ball valve to the return line. As the pressure in the control chamber drops, system pressure will move the selector piston to synchronously close the pressure isolating valve thus cutting off supply to the servo valve, and opening the by-pass circuit linking both sides of the auto-control piston. Auto-control of the unit is now non-functional.

The auto-control system is supplied with hydraulic pressure from the aircraft No.2. hydraulic system, should this fail, or the auto-stabilisation system be switched 'Off', the spring centring device in the auto-control jack, centring the jack in the mid-position, will provide a fixed datum for the lower end of the summing lever. In mechanical input the linkage will thus move about this datum in response to manual demand from the pilot.

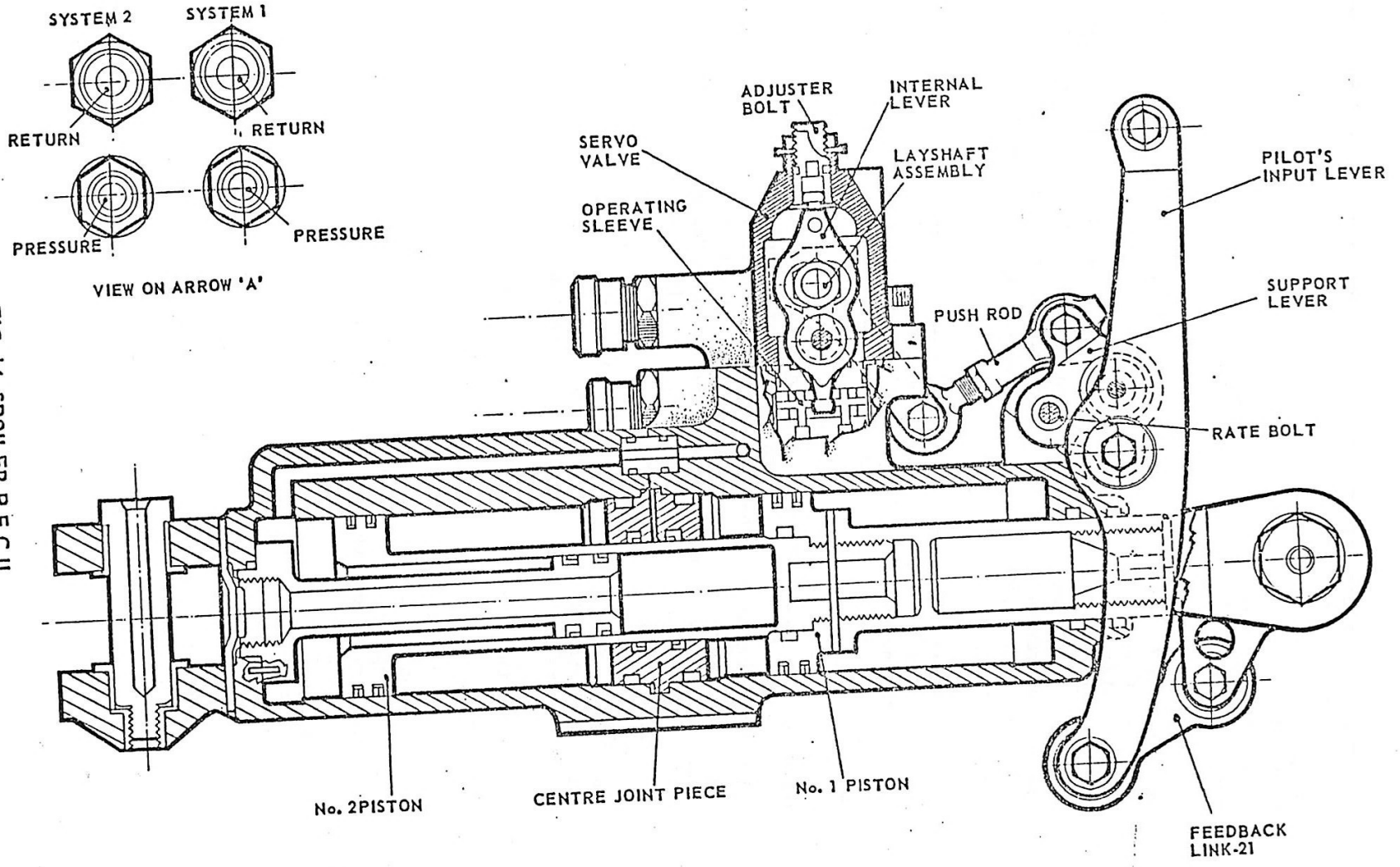

FIG. 14 SPOILER P.F.C.U.

4. SPOILER CONTROL UNIT.

4.1. Introduction.

Similar methods of construction are utilised for the Spoiler unit to those already described for Tailplane and Rudder. It is a tandem jack built in two halves which entrap a centre joint piece with an unbalanced main jack and a balancing piston, attached to the extension end.

4.2. Description.

Little comment is necessary regarding the jack assembly beyond what has already been stated. The two servo valves are housed in cavities formed in the jack body and are retained in position by the valve body, which is bolted to the main jack.

The input linkage to the valves is similar to the Rudder and Tailplane linkages but is much simpler, comprising only a position feedback link, differential lever, support lever rate bolt and push rod, which is directly connected to a crank on the valve lay-shaft. The valve internal parts are constructed and operated in exactly the same manner as the Rudder unit, but in the absence of a pressure feedback mechanism the upper end of the valve operating lever is located rather differently. Its ball end is housed in a socket machined in the lower end of an adjuster bolt mounted in the top of the valve body and as the socket is eccentric to the centre line of the bolt, rotation of the bolt will effect adjustment of the position of the operating lever and the sleeve. This arrangement allows synchronisation of the two valves to be carried out.

A balancing piston, which is attached to the end of the jack body, is housed inside the ram of No.2. piston to minimise the assymetric thrust of the jack. The tandem cylinders are formed from the two bodies which are bolted together and enclose a centre joint piece. The two cylinders are separated hydraulically by two sets of seals with an atmospheric vent between them to prevent interconnection between systems should one seal fail. In the event of failure of either of the systems the unit will remain operative but with a reduced output.

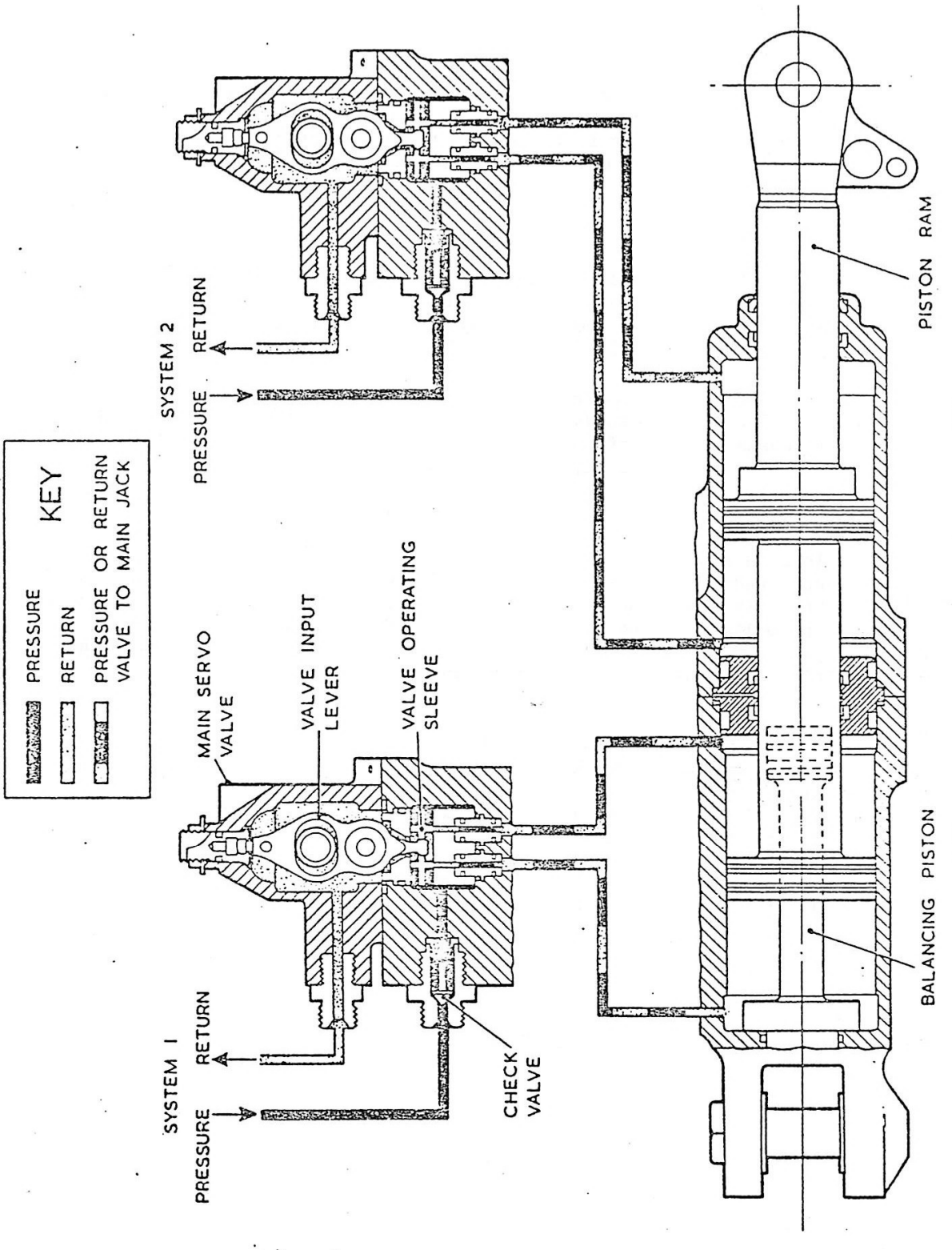

FIG.15 SPOILER P.F.C.U. SYSTEM DIAGRAMATIC

4.3. Operation.

The pilot's input demand is transmitted to the valve operating sleeves via the layshaft assembly, valve input lever, push rod, support lever and bifurcated pilot's input lever. Movement of the valve operating sleeves causes pressurised fluid to be directed to the appropriate side of the jack piston. Resultant movement of the piston ram moves the attached feedback link which, in turn, pivots the input lever about its top point (held by the pilot) and, through the linkage, reverses the movement of the operating sleeves, cancelling the original signal. Limited pilot's input lever movement, therefore, results in limited jack ram travel and prolonged movement in proportionately greater travel. Each valve assembly is fed by a separate hydraulic system; in the event of failure of one system the power control will continue to function. A check valve is incorporated in each pressure inlet to prevent fluid being forced back into the supply by piston movement when a system is in the 'failed' condition.

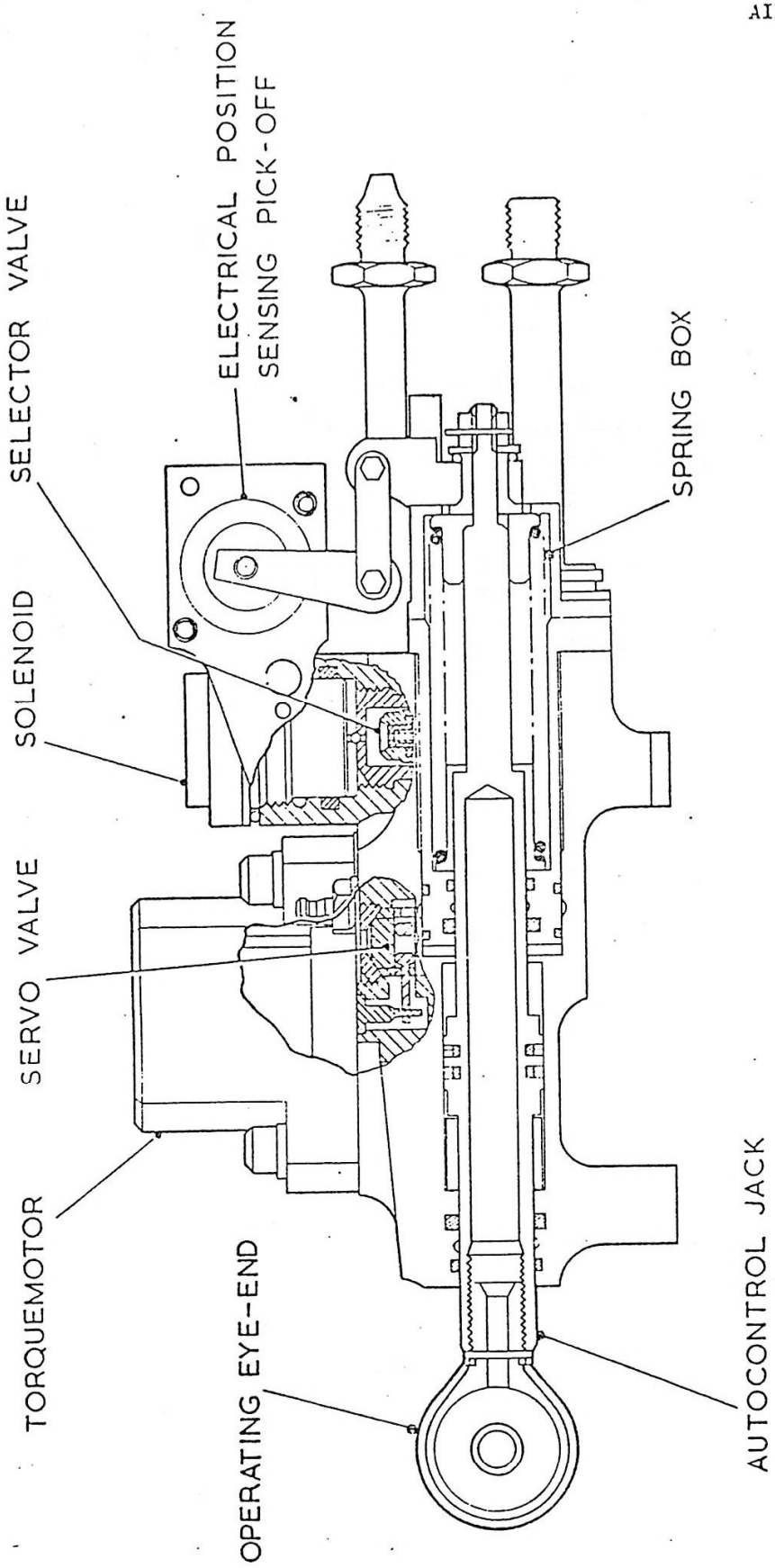

FIG. 16 SPOILER A/STAB. P.F.C.U.

5. SPOILER AUTO-STABILISATION. P.F.C.U.

5.1. Introduction.

To provide an auto-control facility in the roll 'axis, a roll damper unit is installed in each wing remote from the spoiler P.F.C.U. but mechanically linked to the spoiler control run by a summing lever and linkage assembly. Input at the spoiler P.F.C.U. is a resultant of the pilots mechanical input and electrical signals from the auto-stabilisation system superimposed by the roll damper.

5.2. Description.

5.2.1. Control unit.

The control unit assembly comprises a solenoid selector valve, a torquemotor operated servo valve, an auto-control jack and an electrical position sensing pick-off. The solenoid selector valve and the torquemotor valve are accommodated in the jack body alongside the jack bore and the position pick-off is linked to the jack piston. Three drilled and threaded mounting lugs are formed in the jack body to facillitate attachment to the aircraft structure and connection to the aircrafts spoiler control system is provided by the jack ram eye-end. During operation the jack body remains stationery and the ram moves relatively.

5.2.2. Auto control jack.

The jack comprises a small spring centred hydraulic ram. The ram forms the base for attachment of the out-put eye-end and the pick-off link assembly. Situated within the jack body and acting directly on the jack piston is a double acting spring box assembly. Hydraulic sealing is provided by double seals located between the jack body and ram and in a gland assembly between the jack chamber and spring box. Any seepage past the seals is collected and vented via an overboard drain.

5.2.3. Solenoid selector valve.

The solenoid selector valve comprises a piston carrying a conical valve at each end. One valve serves to isolate the torquemotor servo valve from the pressure system, while the second conical valve controls a passage through the selector valve forming a by-pass circuit linking the jack chambers. This ensures that the jack centring datum is not influenced by any seepage through the solenoid selector valve. The two valves are interconnected by the piston and function simultaneously. The hollow piston contains a number of steel balls, selected on assembly, that provide a fixed bleed path through the selector. A control chamber formed at the solenoid end of the unit and open to return via the solenoid operated ball valve, controls the selector valve positions.

5.2.4. Torquemotor operated servo valve.

The servo valve housed in the jack body is of standard Fairey design having a steel annular sleeve, which slides in a space formed by steel platens and a corresponding circular spacer. The valve operating arm engages with a crank on the torquemotor shaft. In its 'neutral' position the valve just closes two ports inter-connected via the bottom platen to the jack. Angular movement of the torquemotor shaft results in linear movement of the valve sleeve thus permitting fluid to flow to one side or the other of the jack.

5.2.5. Electrical connections.

A single electrical receptacle is provided for making the connections between the aircraft, torquemotor, auto-control pick-off and solenoid.

5.2.6. Cover plates.

The linkage and pick-off are protected by cover plates.

5.3. Operation.

Aircraft auto-stabilisation system switched 'off', the solenoid is de-energised. The selector valve is positioned hydraulically so as to inhibit the supply of pressure to the torquemotor valve and to ensure the jack chamber pressures are equalised by virtue of the by-pass circuit. When the solenoid is energised (autostabiliser system switched 'ON') the small ball valve at the base of the selector valve is mechanically driven on to its seat closing off the fixed rate bleed path through the selector to return.

Hydraulic pressure now builds up in the control chamber above the selector valve piston, since the area of the selector valve piston is larger at the control chamber end, the piston moves to seat the by-pass conical valve therefore isolating the two jack chambers. Simultaneously the pressure isolating conical valve will leave its seat to admit high pressure fluid to the torquemotor operated servo-valve, the unit is now fully functional.

Demand for roll-correction from the aircraft auto-stabiliser control system reaches the torquemotor in the form of a d.c. signal of voltage proportional to the amount of correction required.

The torquemotor will turn through an angle proportional to the error signal thereby displacing the servo valve and allowing fluid under pressure to be directed through open ports in the bottom platen to one side or the other of the jack. The jack will move accordingly in the required direction thus actuating the spoiler control run via a summing lever. Jack movement is constantly monitored by a pick-off, which provides positional feed-back signals to the auto-stabiliser computor. When the jack movement has provided sufficient correction in responce to auto-control demand, the input signal to the torquemotor is cancelled and the servo-valve returned to neutral.

The roll-damper is supplied with hydraulic pressure from the aircrafts No.2. hydraulic system. Should this fail or if the auto-stabilisation system is switched off the jack will return to its neutral position under the influence of the spring box and will provide a fixed datum for the summing lever.

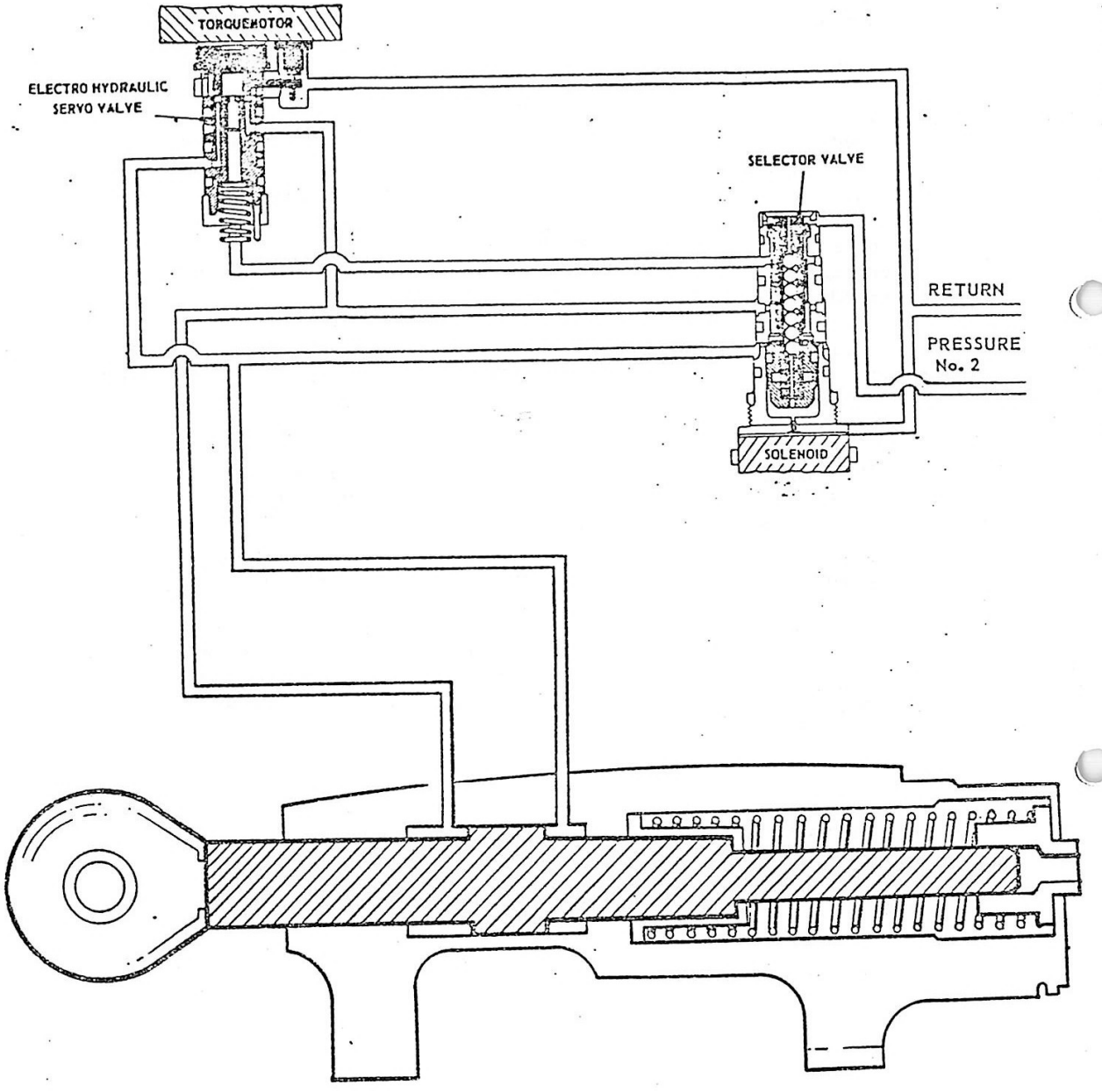

FIG. 17 SPOILER AUTOSTABILISER.

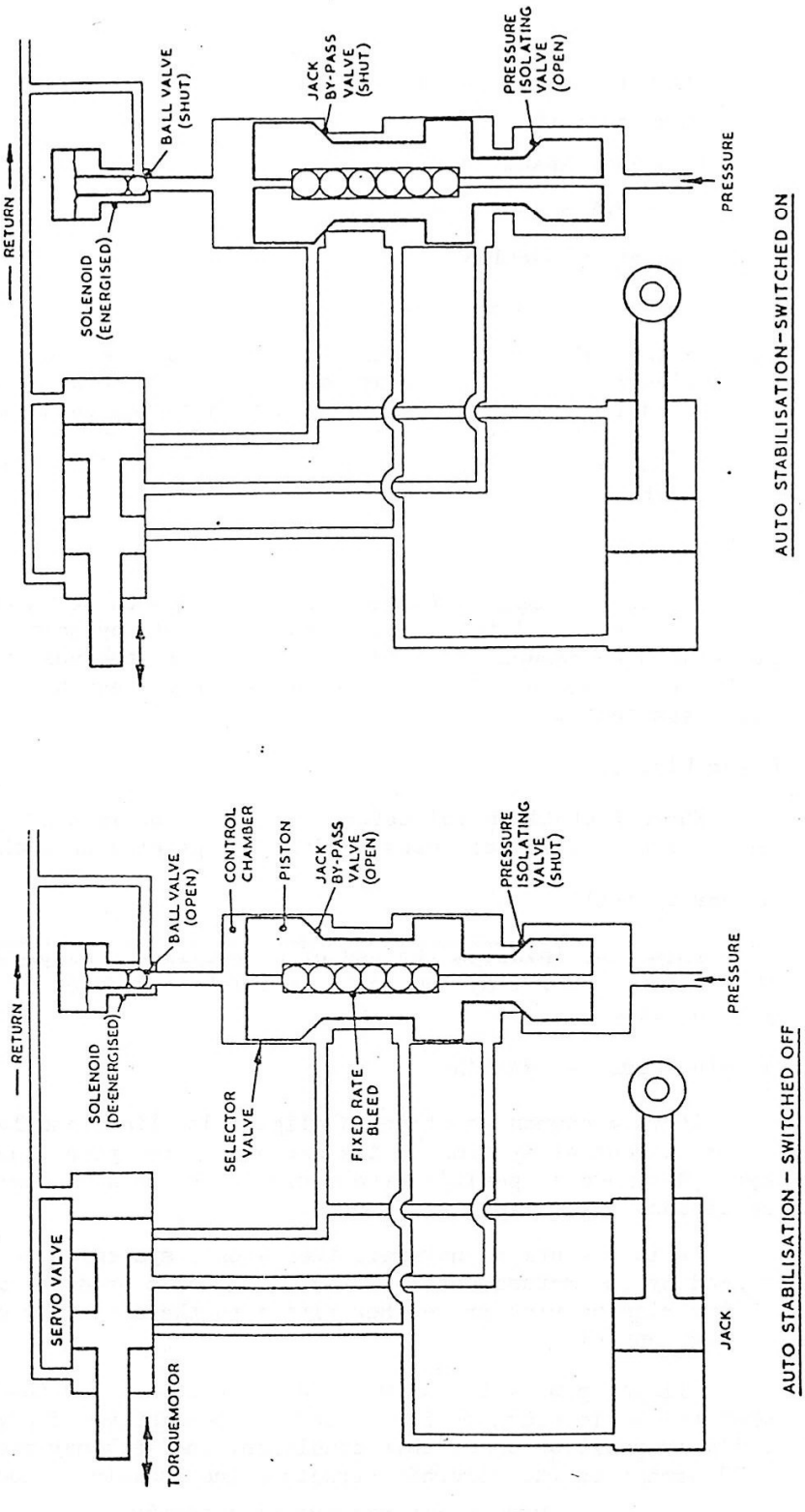

AUTO STABILISATION FUNCTIONAL DIAGRAM

FIG. 18

6. SERVICING.

6.1. Testing.

Both the tailplane and rudder units break down into four major modular assemblies:-

Main Jack Assembly.

Servo Valve Assembly.

Modulator Assembly.

Auto-control Assembly.

The spoiler unit will have only (1), (2), and 4 of these. All of these assemblies are first tested as separate items, each to its respective test schedule, the whole assembly is then tested to a comprehensive schedule. All schedules are designed throughout to disclose any defect built into an assembly, the test schedule is in fact the final and overruling authority.

6.2. Caution.

Due to the high performance requirements these units are extremely sensitive to any disturbance. Disassembly of any part (except such items as hose connectors, etc), would require the unit to undergo its full test schedule which includes linearity, frequency response and stiffness tests.

6.3. Cover Plates.

The detachable metal covers are not to be removed as this involves the function of autostab for linkage clearance checks.

6.4. Linearity Test.

This test involves the use of an oscillator supplying the signal to the auto-control system and a position transducer to record the main jack position.

6.5. Rigging Pins - WARNING.

It is a common practice to align rods, links and levers throughout aircraft control systems by the use of rigging pins; the operation being designed to position the moving parts in a mechanically neutral condition.

It is essential, however, that when a system is being mechanically rigged by the method outline above, hydraulic pressure is not applied whilst rigging pins are either fitted to the circuitry or the powered flying controls.

Rigging pins will not necessarily hold a power control in neutral when hydraulic pressure is applied; consequently, if a rigging pin is still in position under this condition, the jack may creep, causing untold damage to the aircraft structure and associated equipment.

REMOVE ALL RIGGING PINS BEFORE

PRESSURISING THE SYSTEM.

BOOK. 3.

JAGUAR GR. MK.1. AIRCRAFT.

FLYING CONTROLS.

CHAPTERS.

CHAPTER. 1.	INTRODUCTION.
CHAPTER. 2.	COCKPIT CONTROLS.
CHAPTER. 3.	SPOILER/ROLL CONTROL.
CHAPTER. 4.	TAILPLANE/PITCH CONTROL.
CHAPTER. 5.	AJAX 'q' FEEL
CHAPTER. 6.	RUDDER/YAW CONTROL.

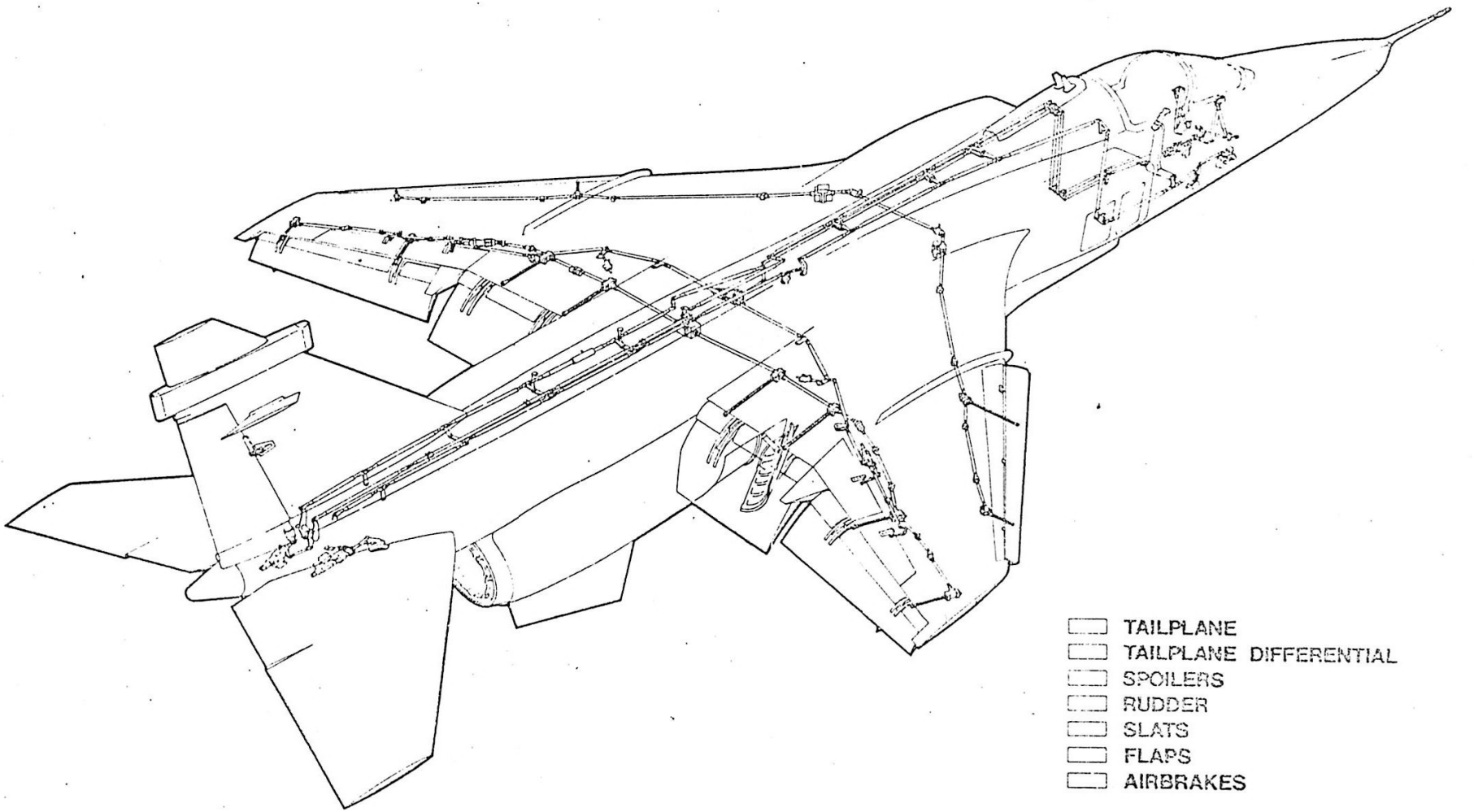

FIG.1 FLYING CONTROLS

1. FLYING CONTROLS.

1.1. Introduction.

Development of the Jaguar's control features has been dictated by the role for which the aircraft has been commissioned.

High supersonic speeds require a very thin wing with as much sweepback as possible, this will result in lower lift - co-efficients and so the emphasis on high-lift devices increase to allow short take-off and landings, on often, make-shift runways.

The short wing span and low aspect ratio, designed for good tactical performance demand that the fullest use be made of the leading and trailing edges for lift augmentation.

To enable circuit speeds to be kept down to around 120 knots, retractable slats on the outboard leading edges of the mainplanes and full span double slotted flaps are fitted to the trailing edge. Because the whole of the mainplane trailing edge is utilised for flaps there is no space available for ailerons, therefore, 'Lateral' control is achieved by a combination of spoilers, on the upper wing surface inter-connected with a differential movement of the tailplane halves. The tailplane is connected to supplement roll control.

Partial Slats can also be selected to provide extra lift when high-g turns are pulled during combat.

The tailplane which is divided into two separate halves is of the 'Slab Type' (That is to say there are no separate elevators), and are capable of moving independently of each other. The reason for the marked anhedral is to keep the tailplane well below the down wash from the wings whilst the aircraft is flying at high angles of attack.

Ventral Fins are fitted beneath the rear fuselage to overcome directional instability caused by fin blanketing during high angle of attack flight.

All flying controls are fully powered and there is no manual reversion but there are adequate back-up systems. Each control has an auto-stabiliser system to provide more damping during weapon delivery, instrument approaches and high speed flight at low altitude.

The airbrakes are of petal design and are fitted under the centre fuselage aft of the main undercarriage bays.

The flying controls are divided into two different categories:-

1.2. Primary Controls.

With which the aircraft directly relies upon for manouverability about its longitudinal, lateral and normal axis consists of:-

1.2. (contd)

Spoiler - for roll control which are assisted or supplemented by differential tailplane movement at low forward speeds.

Tailplane - for pitch control, but it can also be utilised for roll control at low forward speeds and spin recovery.

Rudder - for yaw or directional control.

1.3. Auxiliary Controls.

Which are 'High Lift' and 'Inflight Braking' devices consist of:-

Inboard and Outboard Trailing Edge Flaps.

Outboard Leading Edge Slats.

Fuselage Airbrakes.

1.4. Description & Operation.

Roll, Pitch and Yaw control surfaces are moved by 'Fairey' duplex powered flying control units (P.F.C.U). fed from No.1. and No.2. hydraulic power systems. If one system fails control can still be maintained on the remaining system but the operating rates will be limited with the increase of control surface loading.

In the event of both Engine Driven Pumps (E.D.P's) failing, the flying controls can still be operated from No.2. hydraulic system using the electro-hydraulic pump, through the rates of operation will again be limited, as the electro-hydraulic pump system operates at a reduced pressure and rate of flow.

Trim and artificial feel is incorporated in all three axis in the form of electrically operated actuators who's full travel is controlled by internal limit switches, with collapsible spring struts and a Ajax'q' feel unit, providing feel facilities.

1.5. Autostabilisation.

All control circuits have provision for autostabilisation. The tailplane and rudder P.F.C.U's have a built in system within the unit. The spoiler circuit incorporates two separate jacks in the control run between the control column and P.F.C.U.

1.6. Flaps & Slats.

Flaps and Slats which are auxiliary controls and high lift devices are electrically selected and hydraulically actuated via a motor torsion shafts and screw jacks. Both No.1. and No.2. hydraulic systems provide pressure to operate these controls.

1. FLYING CONTROLS.

1.1. Introduction.

Development of the Jaguar's control features has been dictated by the role for which the aircraft has been commissioned.

High supersonic speeds require a very thin wing with as much sweepback as possible, this will result in lower lift - co-efficients and so the emphasis on high-lift devices increase to allow short take-off and landings, on often, make-shift runways.

The short wing span and low aspect ratio, designed for good tactical performance demand that the fullest use be made of the leading and trailing edges for lift augmentation.

To enable circuit speeds to be kept down to around 120 knots, retractable slats on the outboard leading edges of the mainplanes and full span double slotted flaps are fitted to the trailing edge. Because the whole of the mainplane trailing edge is utilised for flaps there is no space available for ailerons, therefore, 'Lateral' control is achieved by a combination of spoilers, on the upper wing surface inter-connected with a differential movement of the tailplane halves. The tailplane is connected to supplement roll control.

Partial Slats can also be selected to provide extra lift when high-g turns are pulled during combat.

The tailplane which is divided into two separate halves is of the 'Slab Type' (That is to say there are no separate elevators), and are capable of moving independently of each other. The reason for the marked anhedral is to keep the tailplane well below the down wash from the wings whilst the aircraft is flying at high angles of attack.

Ventral Fins are fitted beneath the rear fuselage to overcome directional instability caused by fin blanketing during high angle of attack flight.

All flying controls are fully powered and there is no manual reversion but there are adequate back-up systems. Each control has an auto-stabiliser system to provide more damping during weapon delivery, instrument approaches and high speed flight at low altitude.

The airbrakes are of petal design and are fitted under the centre fuselage aft of the main undercarriage bays.

The flying controls are divided into two different categories:-

1.2. Primary Controls.

With which the aircraft directly relies upon for manouverability about its longitudinal, lateral and normal axis consists of:-

1.2. (contd)

Spoiler - for roll control which are assisted or supplemented by differential tailplane movement at low forward speeds.

Tailplane - for pitch control, but it can also be utilised for roll control at low forward speeds and spin recovery.

Rudder - for yaw or directional control.

1.3. Auxiliary Controls.

Which are 'High Lift' and 'Inflight Braking' devices consist of:-

Inboard and Outboard Trailing Edge Flaps.

Outboard Leading Edge Slats.

Fuselage Airbrakes.

1.4. Description & Operation.

Roll, Pitch and Yaw control surfaces are moved by 'Fairey' duplex powered flying control units (P.F.C.U). fed from No.1. and No.2. hydraulic power systems. If one system fails control can still be maintained on the remaining system but the operating rates will be limited with the increase of control surface loading.

In the event of both Engine Driven Pumps (E.D.P's) failing, the flying controls can still be operated from No.2. hydraulic system using the electro-hydraulic pump, through the rates of operation will again be limited, as the electro-hydraulic pump system operates at a reduced pressure and rate of flow.

Trim and artificial feel is incorporated in all three axis in the form of electrically operated actuators who's full travel is controlled by internal limit switches, with collapsible spring struts and a Ajax'q' feel unit, providing feel facilities.

1.5. Autostabilisation.

All control circuits have provision for autostabilisation. The tailplane and rudder P.F.C.U's have a built in system within the unit. The spoiler circuit incorporates two separate jacks in the control run between the control column and P.F.C.U.

1.6. Flaps & Slats.

Flaps and Slats which are auxiliary controls and high lift devices are electrically selected and hydraulically actuated via a motor torsion shafts and screw jacks. Both No.1. and No.2. hydraulic systems provide pressure to operate these controls.

1.7. Airbrake.

Airbrakes are electrically selected and hydraulically operated by hydraulic jacks which are only supplied with pressure from No.2. Hydraulic System.

No alternative operation is provided, other than by the Power transfer Unit system or the Emergency Electro-hydraulic Pump.

CHAPTER. 2.

COCKPIT CONTROLS & INDICATION.

CONTENTS.

1. COCKPIT CONTROLS & INDICATION.

1.1. INTRODUCTION.

1.2. ELECTRICAL CONTROLS & INDICATORS.

1.3. MECHANICAL CONTROLS.

1.4. RUDDER PEDAL ADJUSTER CONTROL.

ILLUSTRATIONS.

FIG.1. COCKPIT LAYOUT.

FIG.2. CONTROL COLUMN.

FIG.3. TRIM SWITCHES & INDICATORS.

FIG.4. AJAX DIFF. T/P. &
RUDDER GEARING S/W & INDICATORS.

CHAPTER 2.

1. COCKPIT CONTROLS & INDICATIONS.

1.1. Introduction.

Operation of the controls in the three principal axis roll, pitch and yaw is achieved mechanically by movement of either the control column or rudder pedals. Control surface trim facilities, high lift devices and airbrake operation is achieved by electrically operated actuators and selector valves. These are activated by either switches or push buttons.

1.2. Electrical Controls & Indicators.

A comprehensive list of switches and gauges is made available in FIG. 1. for:-

Primary Control Surface Trim.

Auxiliary Control Surface Selection and Failure Caption.

Tailplane 'q' Feel and Failure Caption.

Autostabilisation and Failure Caption.

Emergency Trim.

Circuit Breakers associated with systems.

1.3. Mechanical Controls.

The mechanical components for the flying controls are the control column, for Pitch and Roll, with a rudder bar for yaw control, via a system of levers and push pull rods, all initiated from the cockpit.

1.4. Rudder Pedal Adjustment Control.

Situated just forward of the control column on the centre console is the rudder bar adjusting handle. Rotation of the handle transmits movement through a unit and flexible drives to reposition the rudder bar assembly. The rudder bar can be moved to a maximum of 9". A spigot 'RED' in colour within the unit assembly acts as a control range of movement stop.

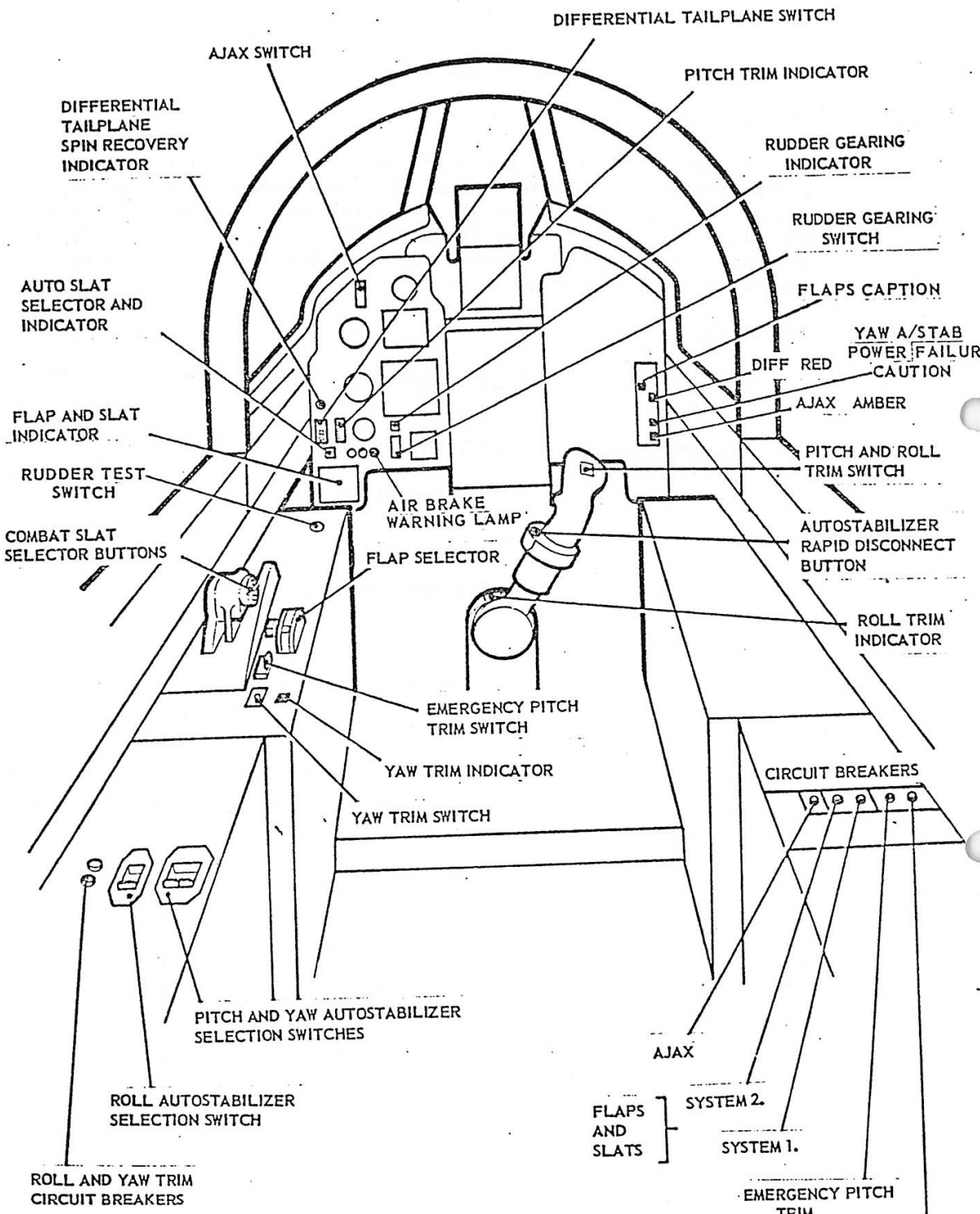

SINGLE SEAT VERSION AND FRONT COCKPIT TWO SEAT VERSION

FIG.1 COCKPIT LAYOUT

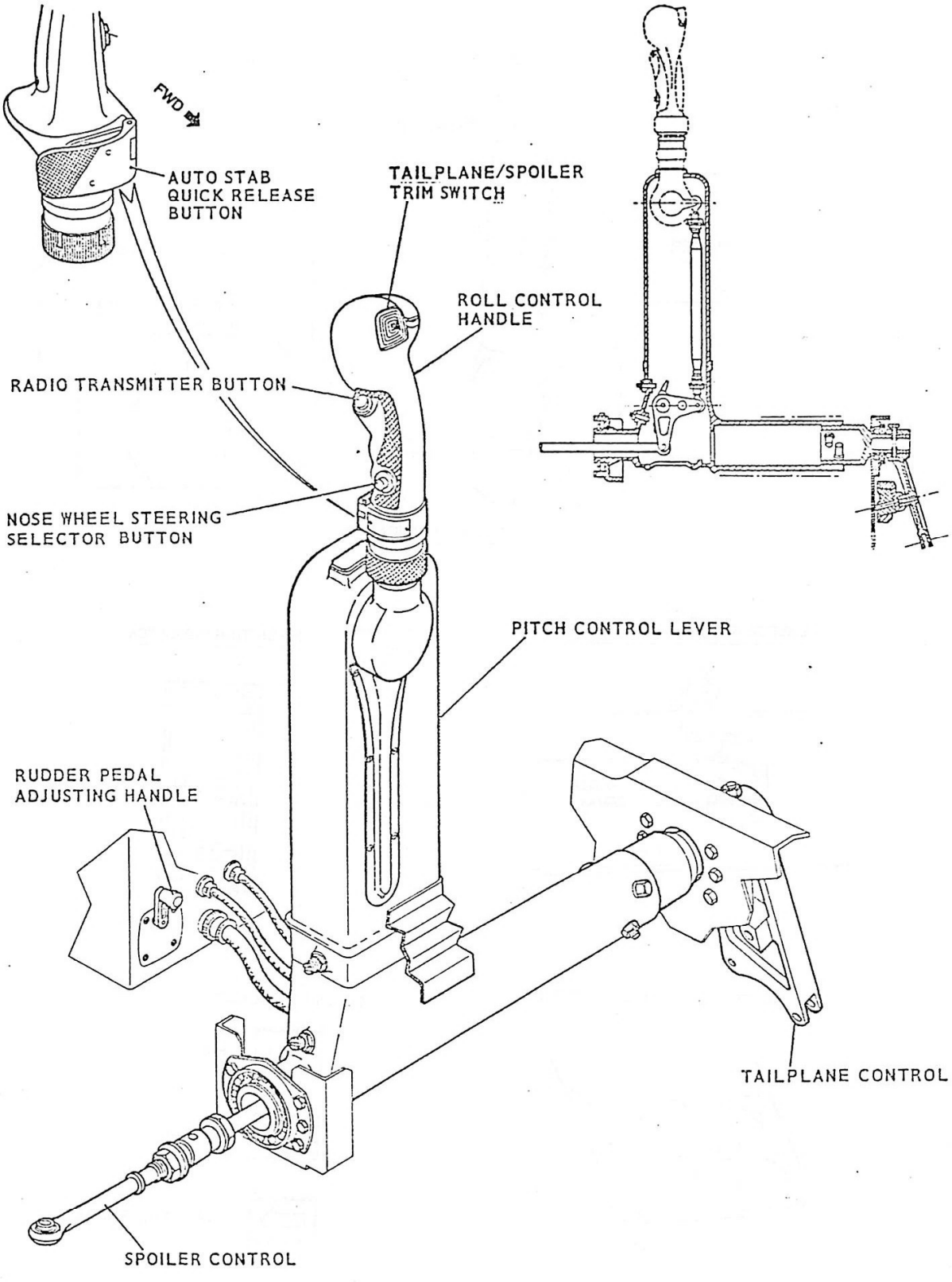

FIG. 2 CONTROL COLUMN

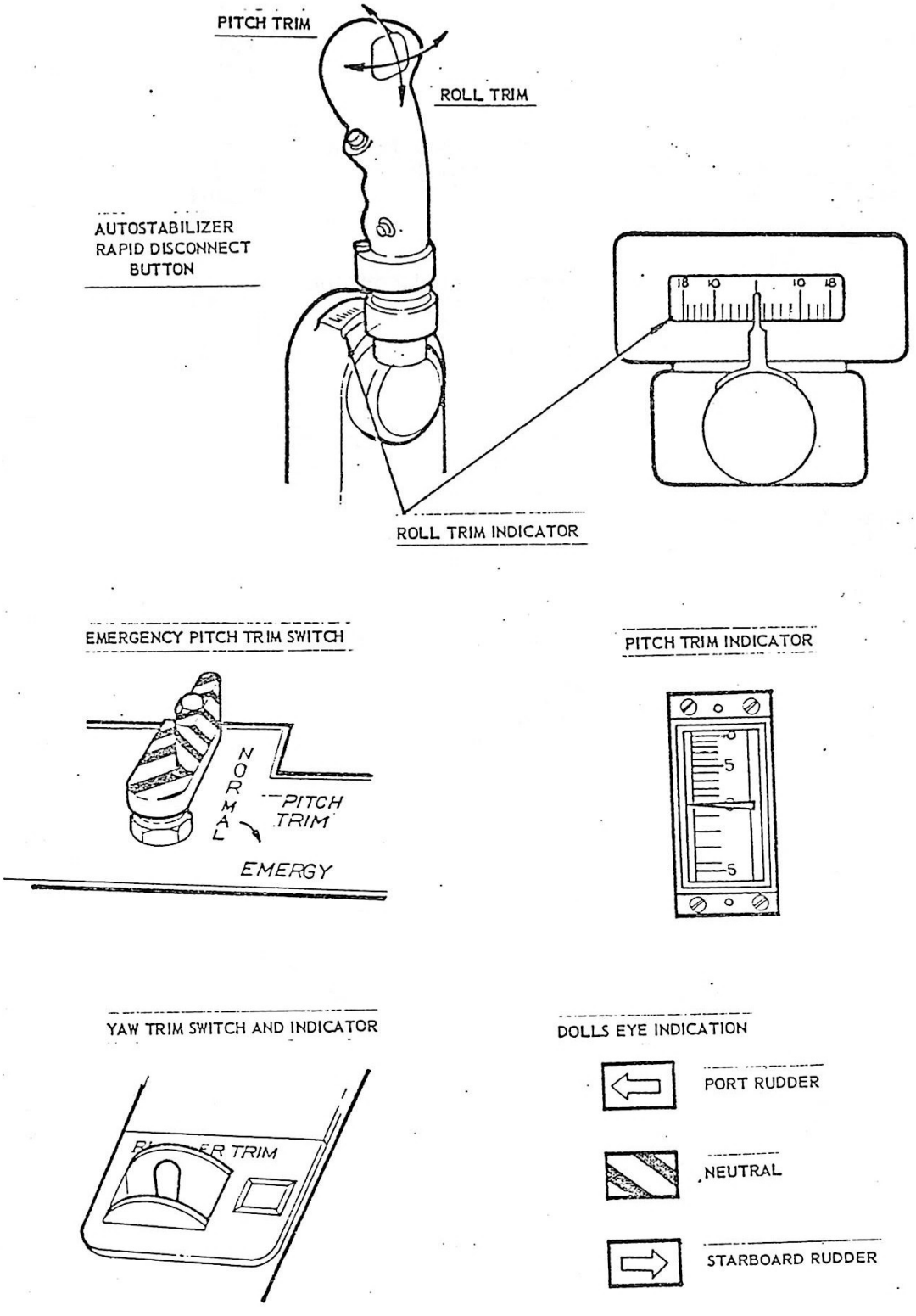

FIG. 3 TRIM SWITCHES AND INDICATORS

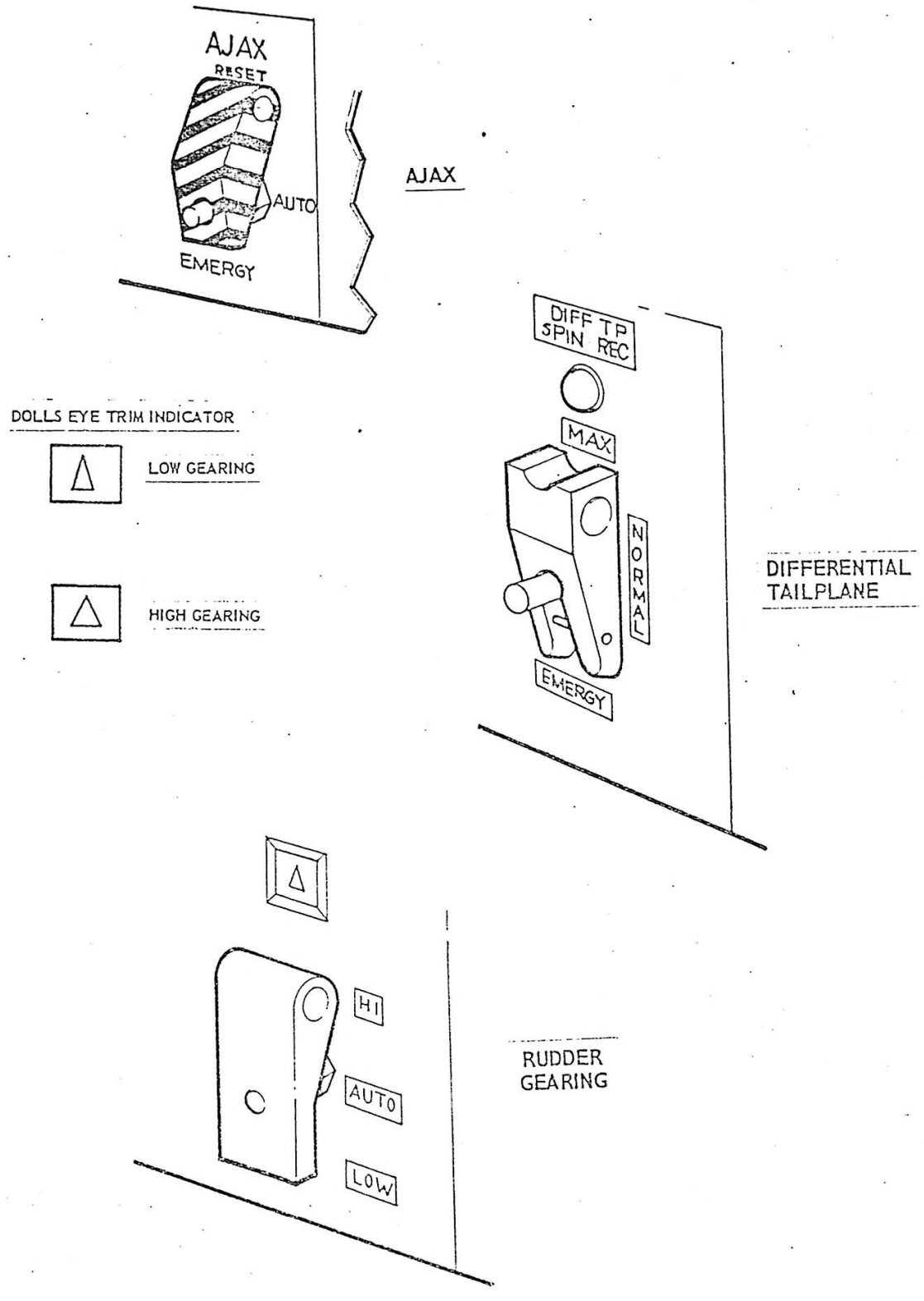

FIG. 4 AJAX DIFFERENTIAL TAILPLANE AND RUDDER GEARING SWITCH AND INDICATORS

CHAPTER 3

ROLL/SPOILER CONTROL

CONTENTS

1. ROLL CONTROL
1.1 INTRODUCTION
1.2 DESCRIPTION
1.3 OPERATION
1.4 PITCH COMPENSATING OPERATION

2. COMPONENTS IN THE CIRCUIT
2.1 CONTROL COLUMN
2.2 CRAB UNIT SPLITTER BOX
2.2.1 INTRODUCTION
2.2.2 DESCRIPTION
2.2.3 OPERATION
2.3 1° NOSE PITCH UP
2.4 AUTOSTABILISATION OVERRIDE POTENTIOMETER
2.5 ARTIFICIAL SPRING FEEL UNIT
2.6 TRIM CONTROL

3. DIFFERENTIAL TAILPLANE CONTROL
3.1 INTRODUCTION
3.2 COCKPIT CONTROLS & SWITCHES
3.3 DESCRIPTION
3.4 OPERATION
3.5 DIFFERENTIAL TAILPLANE CLUTCH ACTUATOR
3.5.1 DESCRIPTION
3.5.2 OPERATION
3.6 SPRING STRUT
3.6.1 OPERATION

ILLUSTRATIONS.

FIG.1. ROLL CONTROL. G.A.

FIG.2. ROLL CONTROL SCHEMATIC.

FIG.3. CONTROL COLUMN.

FIG.4. CRAB UNIT SPLITTER BOX.

FIG.5. CRAB UNIT SPLITTER BOX SCHEMATIC.

FIG.6. TRIM CONTROL SCHEMATIC.

FIG.7. TRIM CONTROLS & INDICATORS.

FIG.8. DIFFERENTIAL TAILPLANE CONTROLS AND WARNING.

FIG.9. DIFFERENTIAL TAILPLANE CIRCUIT.

FIG.10. TAILPLANE LINKAGE.

FIG.11. DIFFERENTIAL TAILPLANE CLUTCH ASSY.

FIG.12. DIFFERENTIAL TAILPLANE CLUTCH ASSY.(CONT'D)

FIG.13. DIFFERENTIAL TAILPLANE CIRCUIT.

FIG.14. DIFFERENTIAL TAILPLANE FUNCTIONAL DIAGRAM.

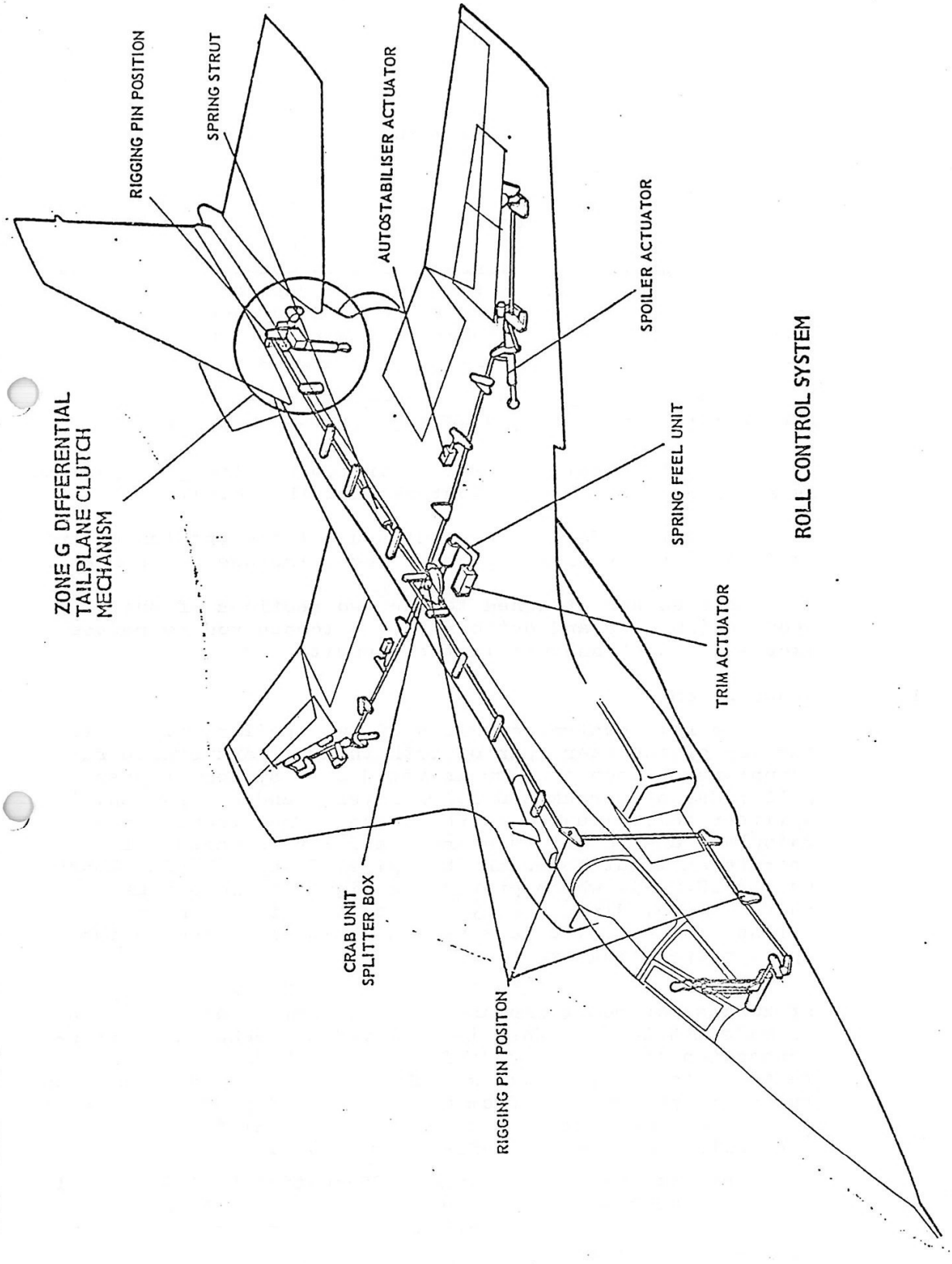

FIG.1 ROLL CONTROL SYSTEM

1. ROLL CONTROL

1.1 Introduction

Roll control is achieved by means of wing spoilers at all times, and at low forward speeds, assisted or supplemented by differential tailplane control. Whenever either spoiler is extended into the airflow there is a tendency for the aircraft to take a nose up attitude, which is automatically compensated for. The roll circuit is mechanically and electrically interconnected with the pitch circuit to provide for differential tailplane control and to counteract the nose pitch up configuration. This counteracting ability for pitching nose up occurs with or without differential tailplane in operation, providing the PITCH autostabilisation system is engaged.

Provision is also made within the control circuit for artificial feel, trim and autostabilisation facilities.

Each wing spoiler which is in two sections is operated by a Fairey Power Flying Control Unit (P.F.C.U).

To avoid a dead spot about neutral the spoiler control surfaces are set slightly above the mainplane top surface.

Located and attached to the two sections of the spoiler (inboard and outboard) is a torque rod to reduce excessive blacklash within the circuit.

1.2 Description

The roll control consists of two spoilers hinged to the top of the rear spar of both the port and starboard mainplanes. Each spoiler is moved by a system of push-pull rods, bellcrank and idler levers, and a 'crab unit' splitter box, situated in the spine. The circuit in each mainplane also consists of rods and levers which finally operate an input lever in the Fairey Powered Flying Control Unit (P.F.C.U). which provides a signal to move a main valve sleeve, directing hydraulic fluid to extend or retract the P.F.C.U. jack ram which is connected to the spoiler operating arm.

Whenever roll control is operated below an airspeed of 200kts maximum tailplane differential movement of $\pm$ 6° is made available. This is achieved by mechanical interconnection of control rods from the Crab Unit Splitter Box to the pitch control Watts Linkage. Differential Tailplane travel is progressive from 0 - + 6° and dependent on spoiler control movement, i.e. maximum tailplane differential of $\pm$ 6° with full spoiler deflection of 45°.

The authority of maximum differential tailplane angle is also governed by airspeed between 200 - 425 knots. At 425 knots and above the roll control is not supplemented by differential tailplane movement.

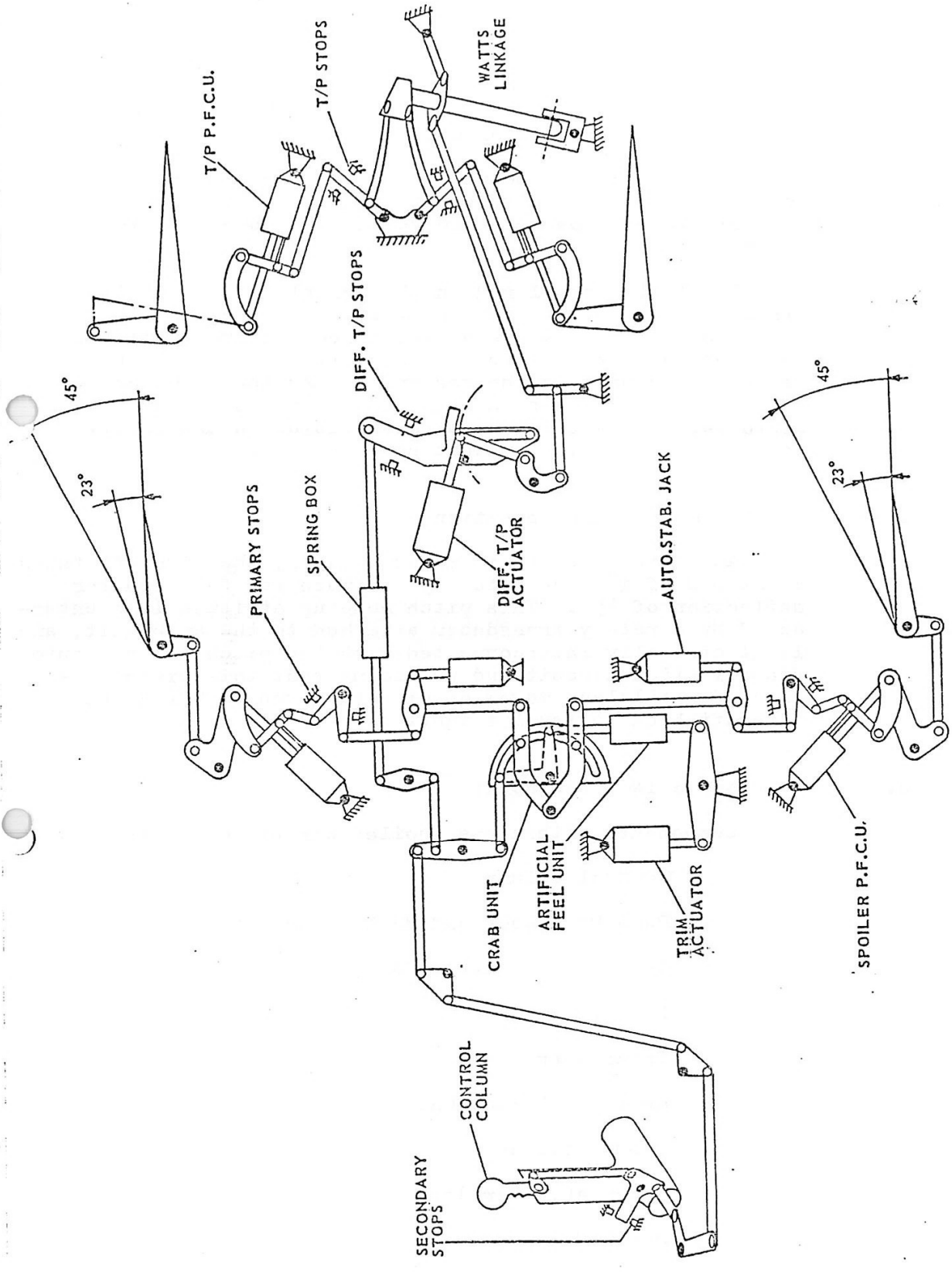

FIG. 2 ROLL CONTROL SCHEMATIC

1.3 Operation

Displacement of the control column in a lateral sense moves levers and control rods as far as the 'crab unit' splitter box, which is situated in the centre fuselage spine. Input signals in the spine are converted to demands in each mainplane by means of the crab unit splitter box. The crab unit will only permit one side of the controls in the mainplane to operate and retain the opposite side in a rigid position.

The last control rod in the mainplane circuit is directly connected to the input lever of the P.F.C.U. which moves the P.F.C.U. servo valve, directing hydraulic fluid to extend or retract the jack and allowing a passage for return fluid back to the reservoir. As the jack ram moves the mechanical feed back linkage also moves to revert the servo valve back to its neutral position; hydraulically locking the P.F.C.U. in that selected position.

1.4 Pitch Compensating Operation

As either spoiler is moved upwards, the aircraft takes a maximum of 1° nose pitch up attitude for full spoiler deflection of 45°. This pitch nose up attitude is counteracted by a rotary transducer attached to the crab unit, and is electrically interconnected with the pitch control autostabilisation circuit and providing that this circuit is engaged, tailplane movement will be given to bring the aircraft back to level flight.

2. COMPONENTS IN THE CIRCUIT

Components within the spoiler circuit consists of :-

Control Column

Push Pull Rods and Bell Crank Levers

Crab Unit Splitter Box

Potentiometer

Transducer

Artificial Feel Unit

Trim Actuator

Autostabiliser Jack

P.F.C.U.

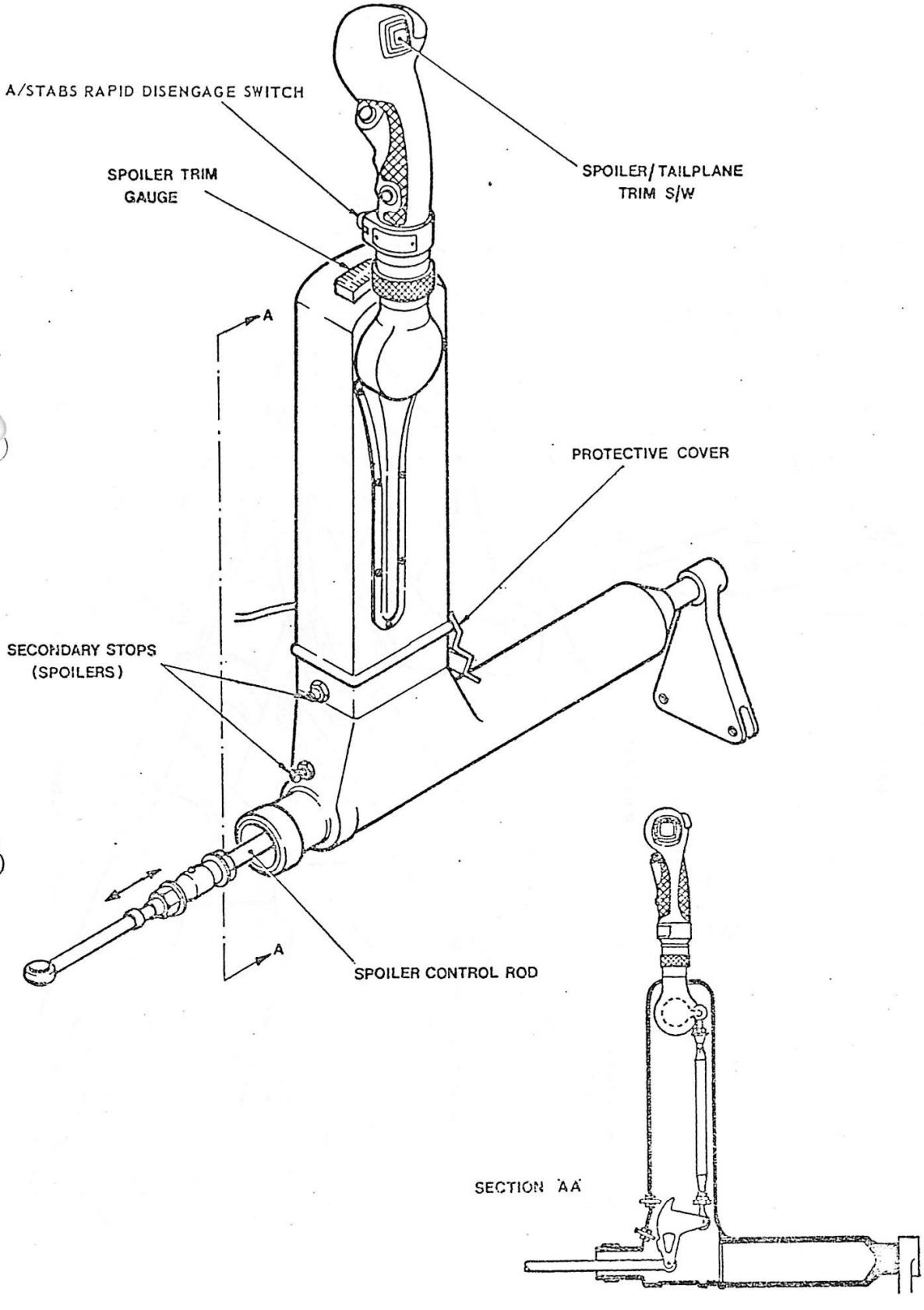

FIG. 3 CONTROL COLUMN

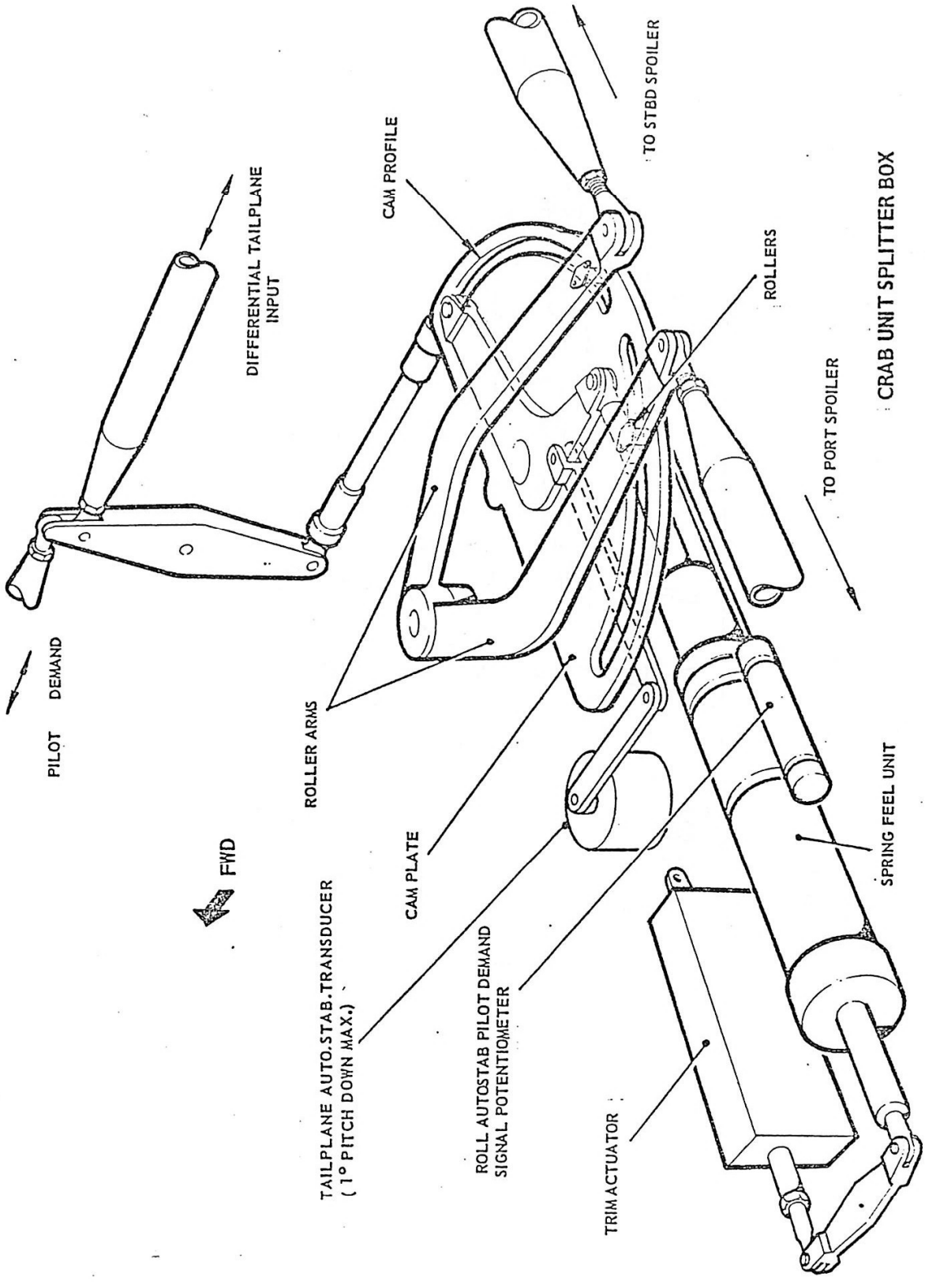

FIG. 4 CRAB UNIT SPLITTER BOX

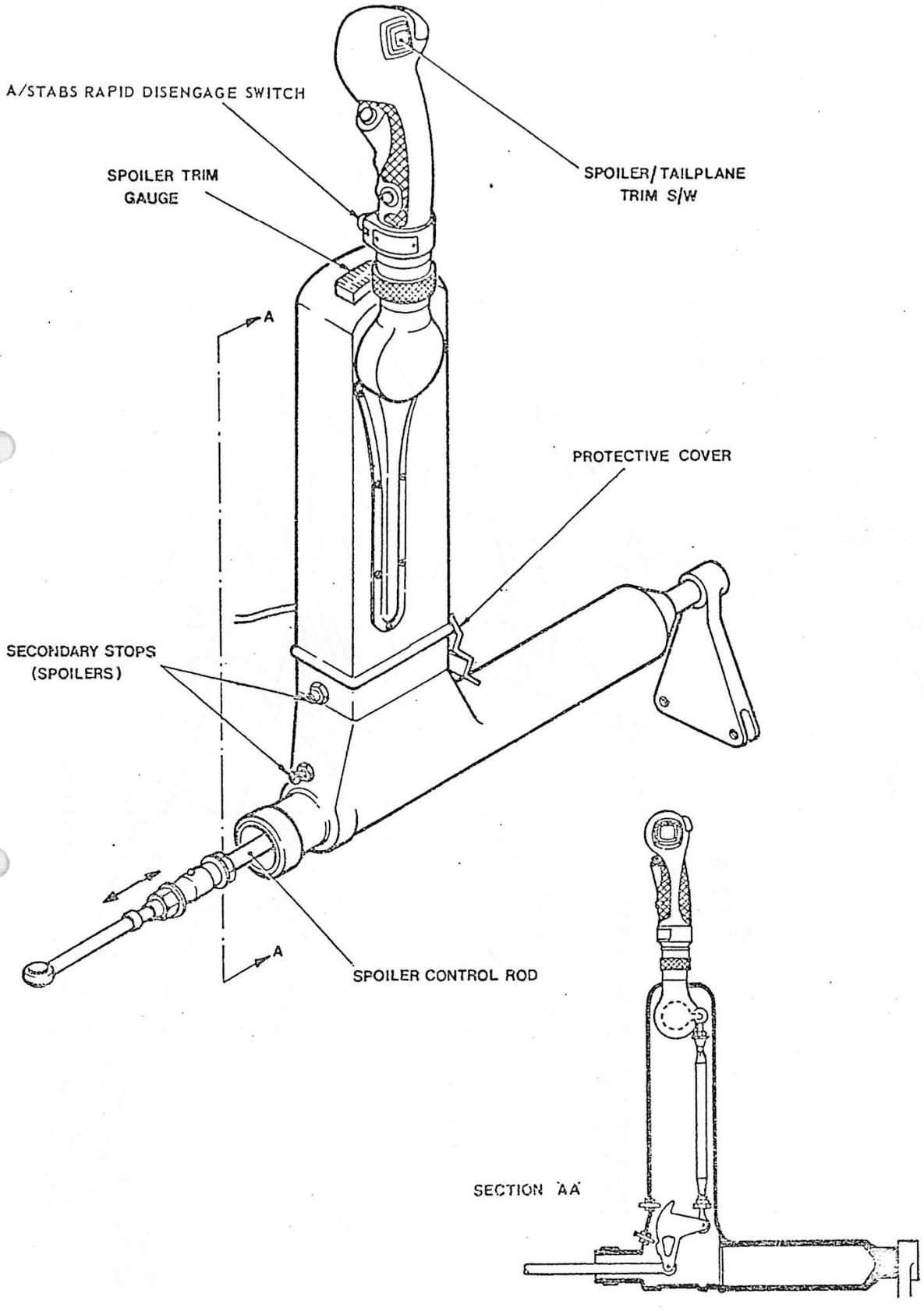

FIG. 3 CONTROL COLUMN

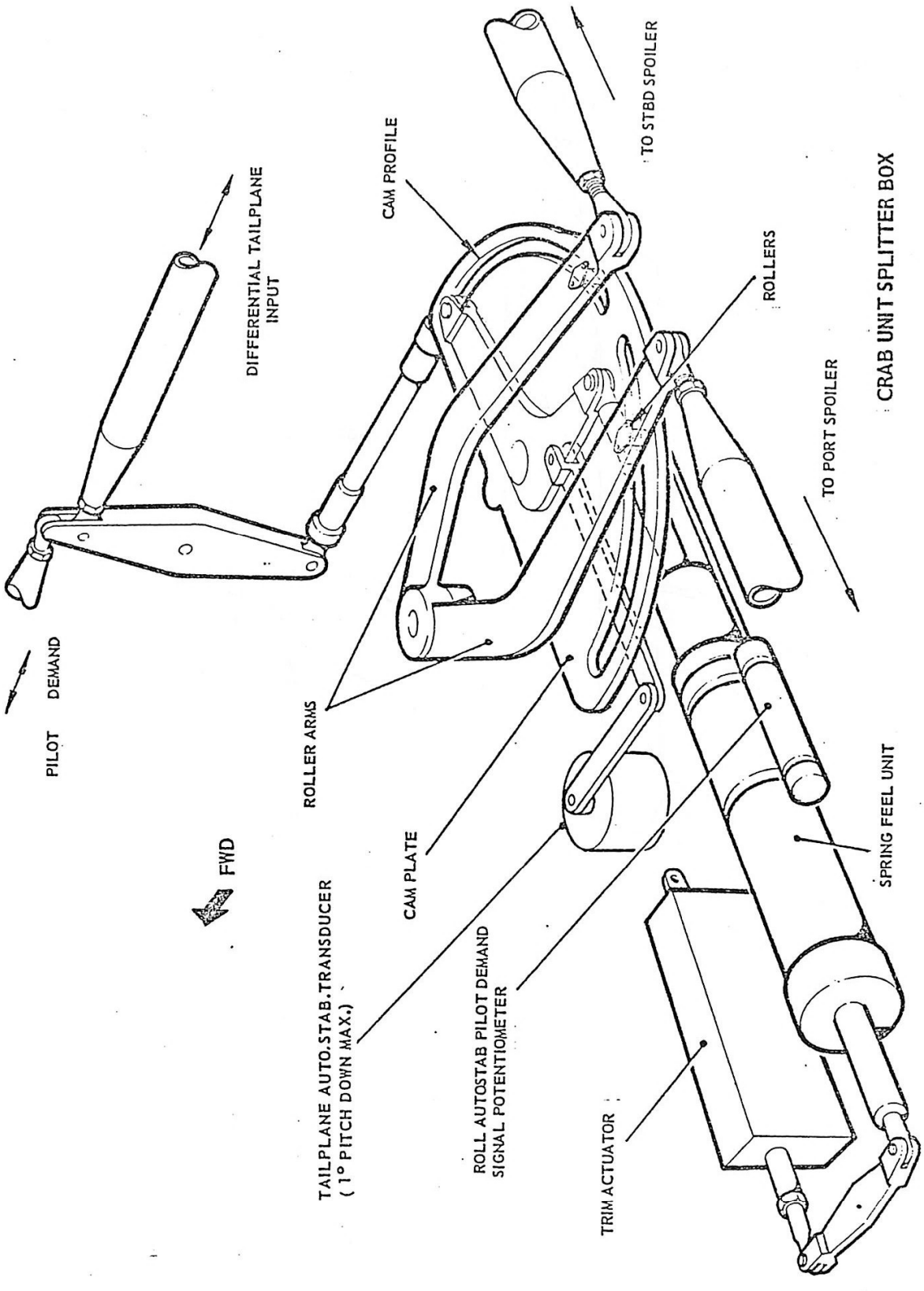

FIG. 4 CRAB UNIT SPLITTER BOX

2.1. Control Column.

The control column, which could be either long or short, dependent on the modification standard of the aircraft (difference in length is approx. $2\frac{1}{2}$"), is the means of transmitting signals to move the spoiler controls. It also incorporates the secondary spoiler control stops and trim switch, with a trim indicator gauge attached to the forward portion of the control column pedestal.

2.2. Crab Unit Splitter Box.

2.2.1. Introduction.

The crab unit splitter box is often referred to as the caliper assembly, and is a unit that ensures that only one side of the spoiler controls in the mainplane to the P.F.C.U. moves.

It converts the pilot's input signal to a single demand to move a P.F.C.U. There is also a 'transducer' and a 'roll autostabiliser potentiometer' fitted to the unit, who's purposes are:-

Transducer.

Compensate for and counteracts the nose pitch up tendency the aircraft has when spoiler controls are operated.

Potentiometer.

Overrides the roll autostabiliser circuit when large manual demands are made by control column movement, providing the autostabiliser circuit is engaged.

2.2.2. Description.

The mechanism consists of a semi-circular cam plate which has two cam profiles. Each cam profile has a double curvature, one concentric the other eccentric with the cam plate pivot point. Attached to the cam plate is a 90° bellcrank lever, the ends of which are connected to:-

Control rods from the cockpit.

Artificial Feel Unit and an autostabiliser potentiometer.

Levers and links to a transducer.

Two rollers secured to caliper arms or roller arms are permitted to move around the cam plate profiles. The caliper arms pivot at one end and the opposite ends are connected to control rods to each P.F.C.U. in the port and atarboard mainplanes. The whole assembly is encased in a box with a detachable cover plate.

2.2.3. Operation.

As the control column is moved to port for instance; the crab unit input lever which is fixed to the cam plate rotates anti-clockwise The roller on the STBD caliper arm follows the concentric cam profile

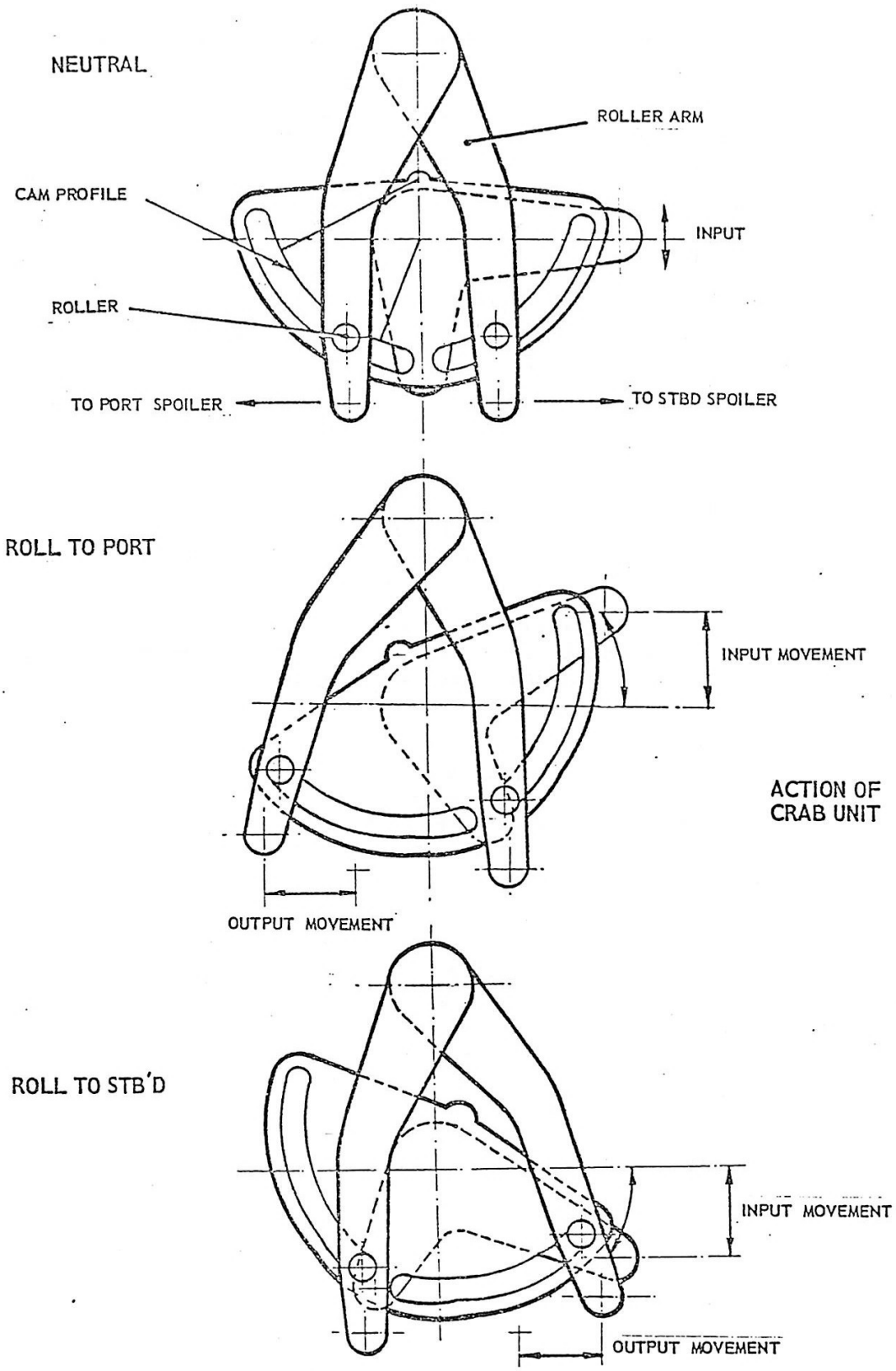

FIG.5 CRAB UNIT SPLITTER BOX SCHEMATIC

2.2.3. (contd)

so no large movement is transmitted to the STBD P.F.C.U. but provision is made for very slight STBD spoiler movement, and the STBD spoiler control will move a maximum of 45' down, thus bringing the spoiler control surface flush with the mainplane top surface.

The roller on the PORT caliper arm follows the eccentric cam profile which forces the caliper arm outwards displacing the control rods a given distance corresponding to the input demand which moves the P.F.C.U. and spoiler control surface.

To avoid a dead spot about neutral both the concentric and eccentric cam profiles are blended together so that both caliper arms move when the crab input lever is displaced. This is seen as an initial displacement of the spoiler surface of approx 45'.

When the controls are in the neutral position both spoilers are set 45' UP, and when control surface movement is made one surface extends from 45' to the selected position where as the opposite surface returns to zero.

2.3. 1° Nose Pitch Up

To compensate for the maximum 1° nose pitch up for full spoiler deflection - a transducer fitted to the crab unit, and connected by levers and links to a 90° bellcrank lever, will, when the spoiler controls are moved feed a signal into the PITCH autostabilisation circuit. Providing the PITCH autostabilisation circuit is engaged, the amount of control movement will be registered by the transducer and passed to the pitch autostabilisation sensing circuit - responding to give proportional tailplane movement, counteracting the nose pitch up attitude. The reverse operation will take place when the spoiler controls revert back to the housed position.

2.4. Autostabilisation Override Potentiometer.

A barrel type potentiometer known as the "Roll Autostabiliser Pitch Demand Signal Potentiometer" is attached to the spring feel unit to register and cut out the Roll autostabiliser circuit if a pilot demand is made with the Roll autostabiliser circuit engaged. This device is necessary because of the large degree of authority the roll autostabiliser circuit has, i.e. 9°.

2.5. Artificial Spring Feel Unit.

A feel unit connected into the control circuit between the crab unit and a pivot arm assembly is secured to the airframe structure via a trim actuator. It consists of a spring box with two springs situated either side of a piston. Movement of the spoiler controls in either direction will compress springs to give a resistance to demand. Thus providing the pilot with artificial loading in the control circuit proportional to the amount of control column movement.

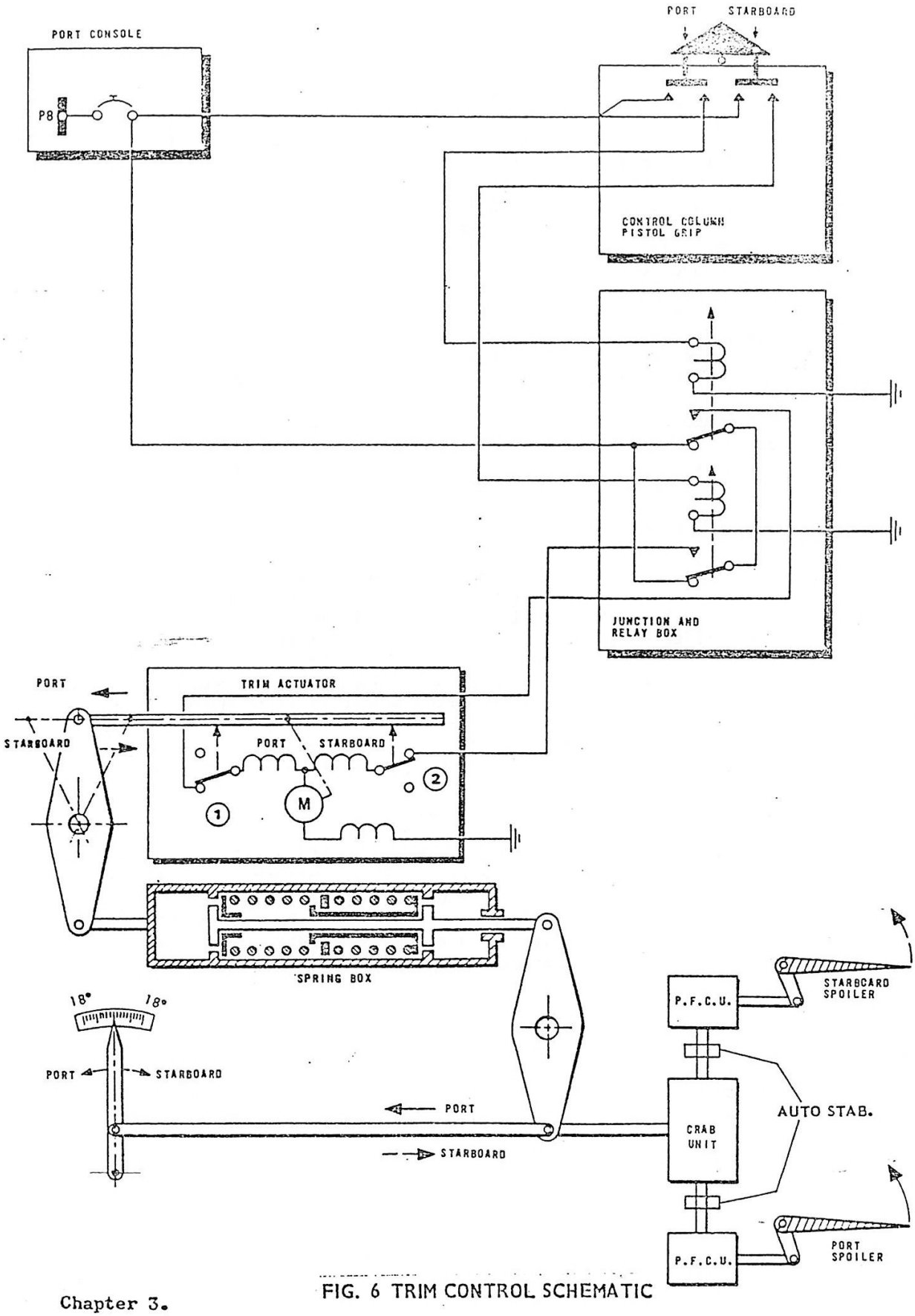

FIG. 6 TRIM CONTROL SCHEMATIC

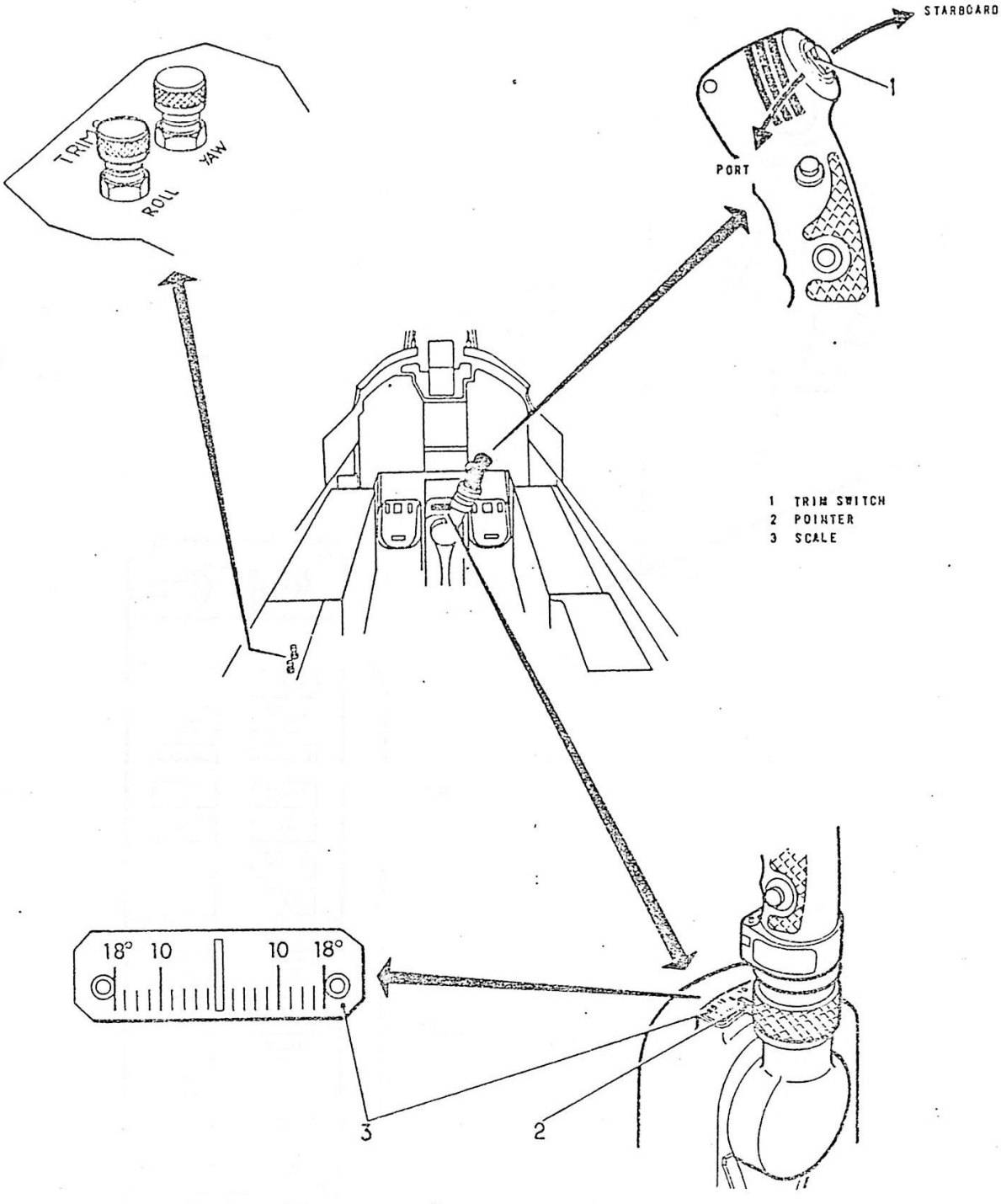

FIG. 7 TRIM CONTROLS & INDICATORS

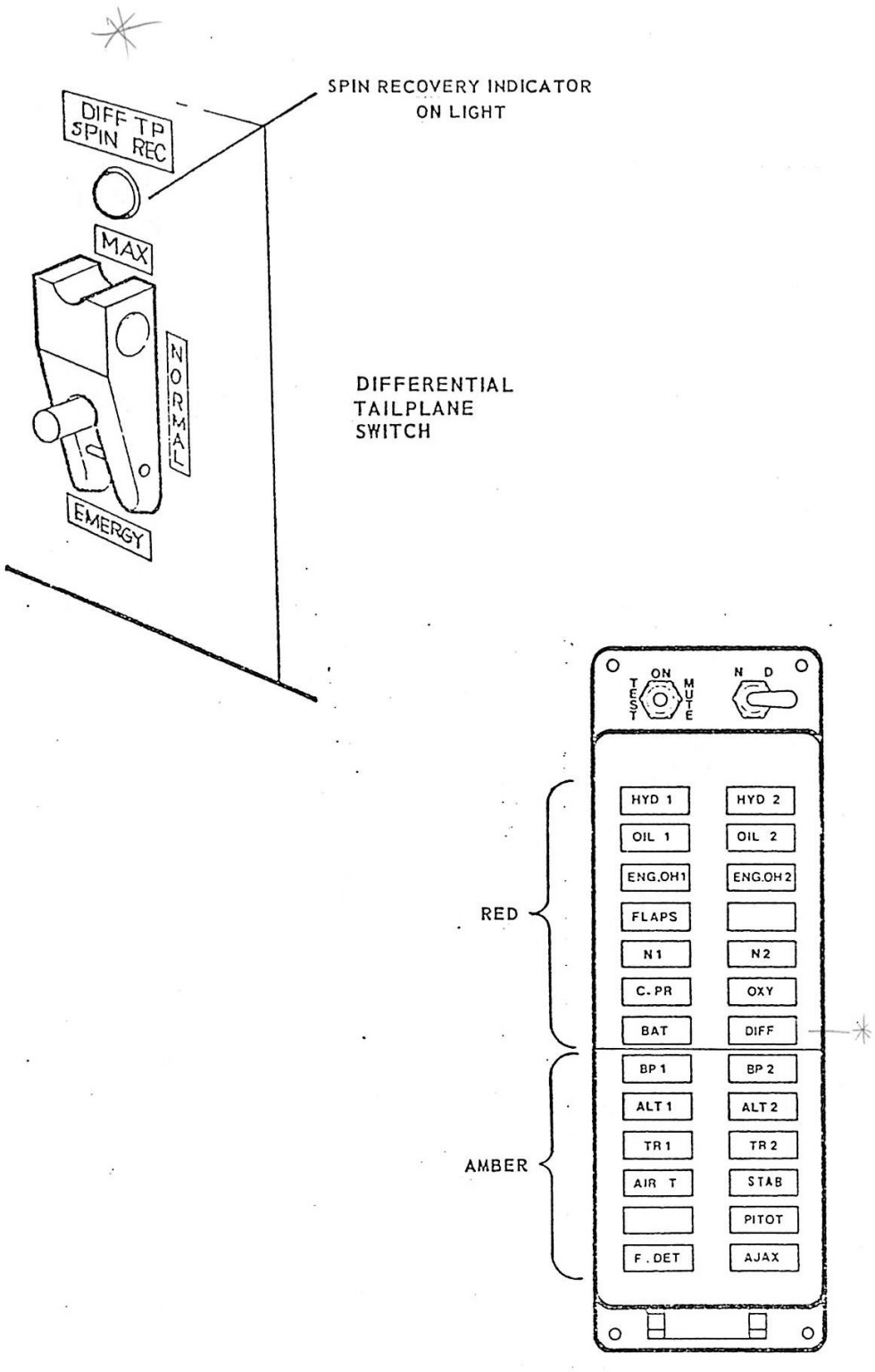

FIG. 8 DIFFERENTIAL TAILPLANE CONTROLS AND WARNING

2.6. Trim Control.

An electrical trim actuator who's body is attached to the airframe structure, with the ram eye-end connected to a pivot arm is joined to the crab unit via an artificial spring feel unit. The trim actuator is installed parallel to the feel unit and is activated by a rocker switch on the top of the column pistol grip.

The length of ram travel is governed by internal limit switches designed to give a maximum range of 18° either side of the trim gauge neutral setting, and a surface movement of 23°.

Displacement of the actuator ram will bias the control surface via the spring feel unit and crab unit 90° bellcrank lever.

3. DIFFERENTIAL TAILPLANE CONTROL.

3.1. Introduction.

Differential tailplane control is an electro/mechanical mechanism that supplements and assists roll control at:-

Low Forward Speeds.

Spin Recovery.

Movement of the two tailplane halves in a differential configuration can only be achieved when the control column is displaced from its upright position. Its operation is automatic providing that the control switch is set to NORMAL and the cut off limit, which is restricted by airspeed, is not exceeded.

3.2. Controls and Indicators.

The differential tailplane control switch situated in the cockpit is a three position switch incorporating a switch pole guard. It is annotated- MAX - NORMAL - EMERGENCY, with a BLUE indicator light immediately above it. This switch is known as the MAX SPIN RECOVERY or DIFFERENTIAL TAILPLANE MASTER SWITCH and serves three purposes:-

Progressively decreases or increases the amount of Differential Tailplane authority.

Authority available with an increase or decrease in forward speed when set to NORMAL.

Override differential tailplane authority at low forward speeds when set to EMERGENCY.

Override the differential tailplane cut off device at high forward speeds when set to MAX SPIN RECOVERY. In this selection it will also override the Rudder Two Stage Gearing cut off system (MOD 234).

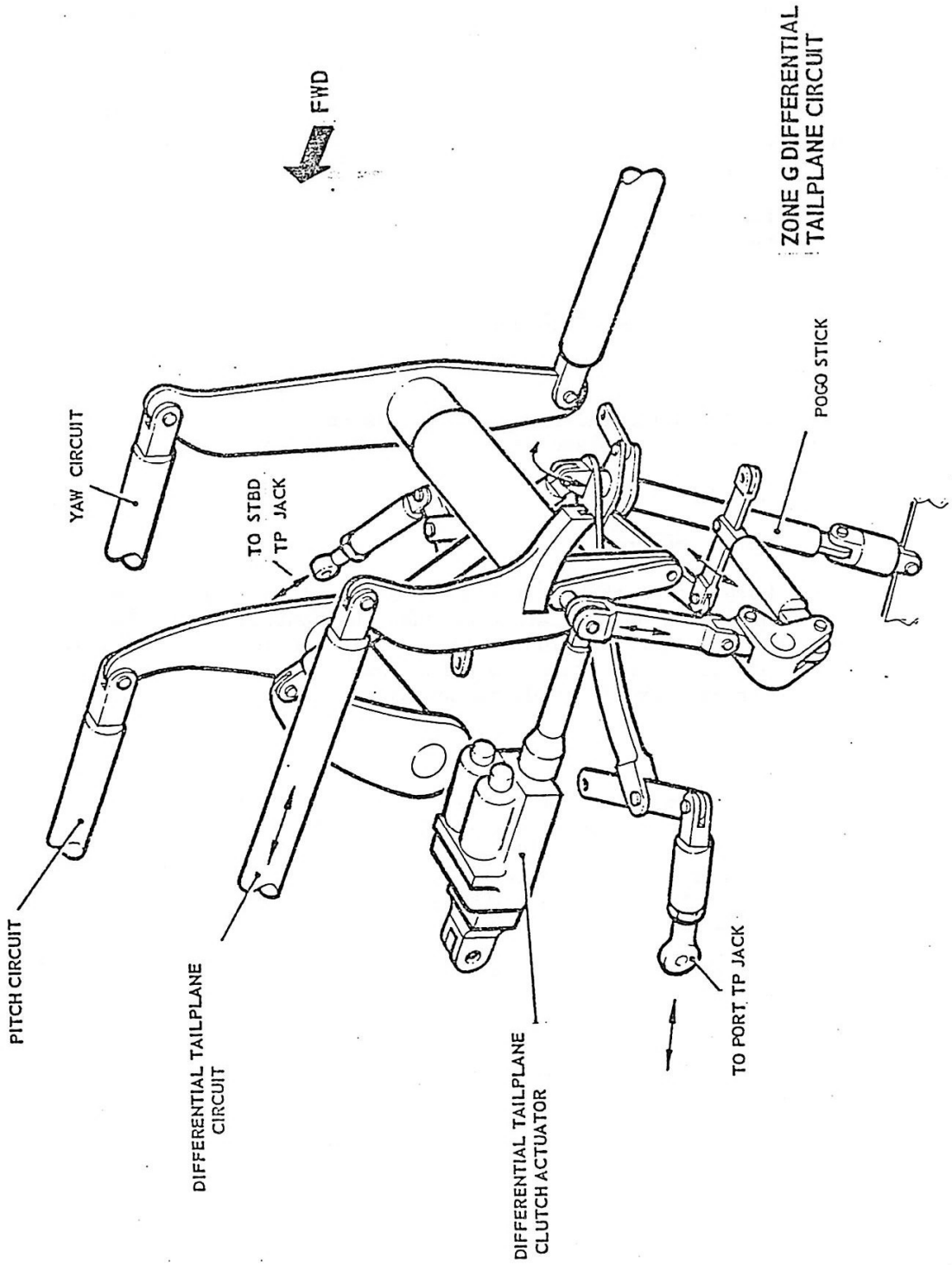

FIG. 9 DIFFERENTIAL T/P CIRCUIT

3.2.1. Indicator Lights.

There are two indicator lights associated with differential tailplane:-

BLUE Light on the PORT FRONT instrument panel which illuminates when MAX SPIN RECOVERY is selected and the DIFFERENTIAL TAILPLANE ACTUATOR reaches the fully extended position.

RED Light on the C.W.P. annotated "DIFF" which illuminates when the "MONITORING COMPUTOR" of the Differential Tailplane Electronics Unit becomes out of balance with the "POSITION POTENTIOMETER" attached to the differential tailplane actuator. It will also illuminate with ELECTRICAL POWER FAILURE of the differential tailplane electronics unit and AJAX electrics unit. In the latter case an additional C.W.P. AMBER light will illuminate AJAX.

3.3. Description.

Differential tailplane authority is made available dependant on airspeed, and by using the AJAX computor. The computor output signal is passed via the Differential Tailplane Electronic Unit to extend or retract an actuator ram, situated in Zone G., of the fuselage which is connected into the controls Watts Linkage.

The length of the actuator ram determines the degree of Differential tailplane authority available with maximum spoiler deflection, it also directly effects the pivot point of the control input levers.

3.3.1. Range of Movement.

The range of movement with full spoiler deflection of 45° is + 6° and is made available from 0 - 200 knots, gradually decreasing to 0° at 425 knots. This circuit is inoperative above 425 knots unless MAX spin recovery is selected.

3.4. Operation (FIG 9-10).

With the Tailplane Differential Actuator Ram fully extended (Below 200 knots forward speed), any displacement of the control column in a lateral sense will cause a control rod, attached to the crab unit splitter box input lever, to transmit a demand signal back to the Watts Linkage assembly. As this demand is made rotary movement will be converted into vertical and horizontal demands to displace the Pogo Stick. As the Pogo Stick moves from the neutral position in a lateral plane linkages to the Port and Starboard P.F.C.U. input levers will move and cause the tailplane halves to operate in opposite senses.

With the Tailplane Differential Actuator ram fully retracted

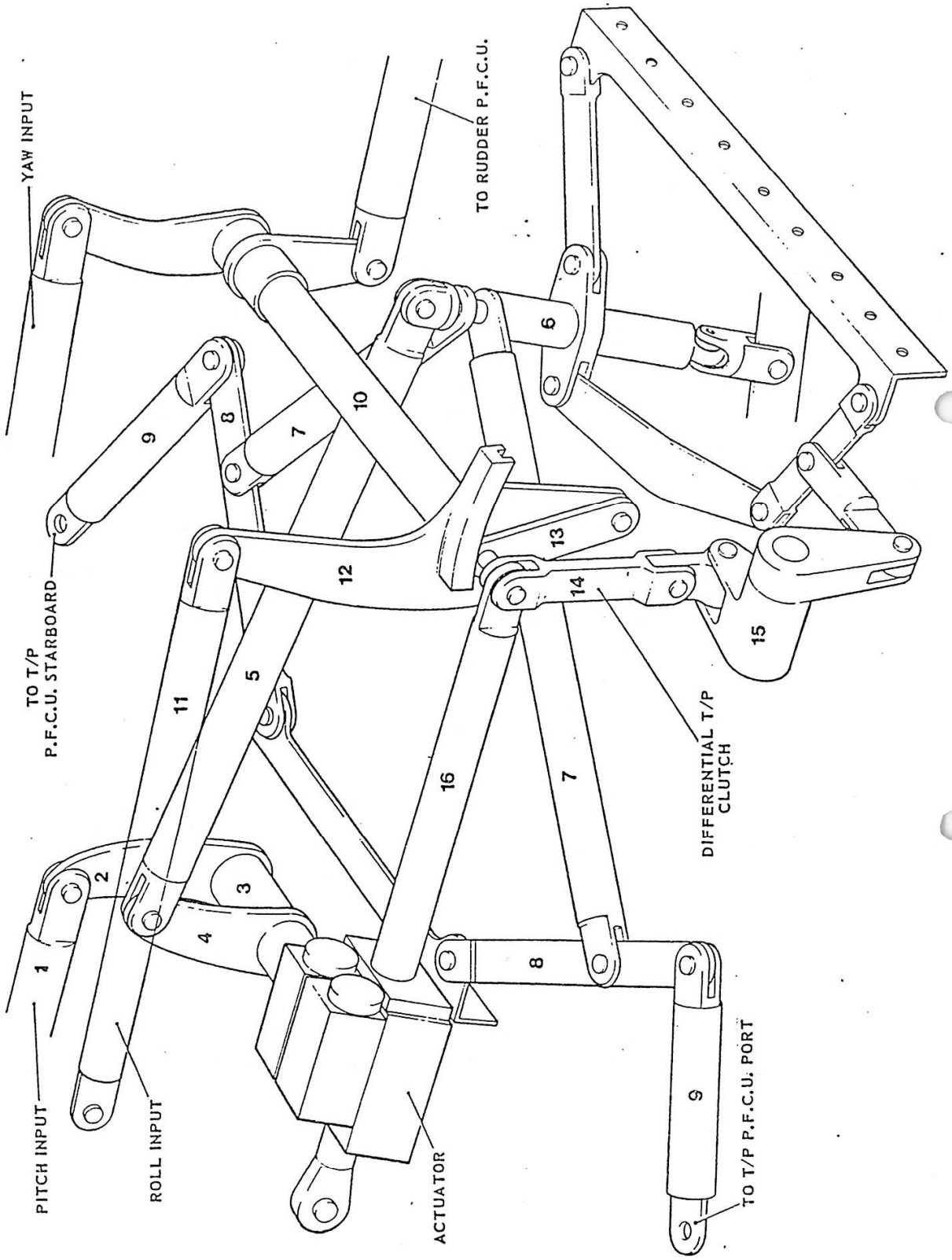

FIG. 10 TAILPLANE LINKAGE

3.4. (contd)

(Above 425 knots forward speed) no movement will take place in the Watts Linkage when the roll control rods are operated.

Roll input from rod (11) causes lever (12) to pivot about the centre of the shaft (10)

With the differential system de-clutched the upper pin centre of lever (13) is co-incident with the centre line of shaft (10) and no further movement takes place. (NOTE: Levers (13) and (14) are connected only at the top pivot point).

When differential control is available the actuator ram (16) extends to displace the top of lever (13), by a distance proportional to the amount of differential available, whereupon any movement of the input lever (12) is transferred via lever (14) and the remaining linkage to displace rod (6) sideways. The displacement, left or right as appropriate, creates an unbalanced input to the two P.F.C.U's resulting in the required degree of differential movement. Fore and aft movement of rod (6) for pitch control can still be superimposed in this configuration.

3.5. Differential Tailplane Clutch Actuator.

3.5.1. Description.

This electrical actuator governs the degree of authority available for the tailplane in the differential mode dependant on the information gained by the Pivot Static capsules of the AJAX Computor. If consists of:-

Two motors No.1. and No.2. contained within a housing and attached to the actuator outer casing.

Operating jack ram located by gearing to No.1.and No.2.motors.

The actuator ram eye end is connected via operating levers to the Pogo Stick, and a clutch assembly lever of the roll input lever.

3.5.2. Operation.

Normal Mode:

With the differential tailplane switch set to NORMAL - FLAP GUARD DOWN. No.1. motor of the actuator will run when required to retract or extend its actuator ram, dependant on the aircraft forward speed, thus repositioning the clutching assembly.

Emergency Mode.

The emergency mode will be selected whenever the RED caption of DIFF on the C.W.P. illuminates, irrespective of air speed. This warning means that monitoring and true information from the AJAX computor via the Differential Tailplane Electronic Unit is unbalanced or electrical power to the electronic unit has failed.

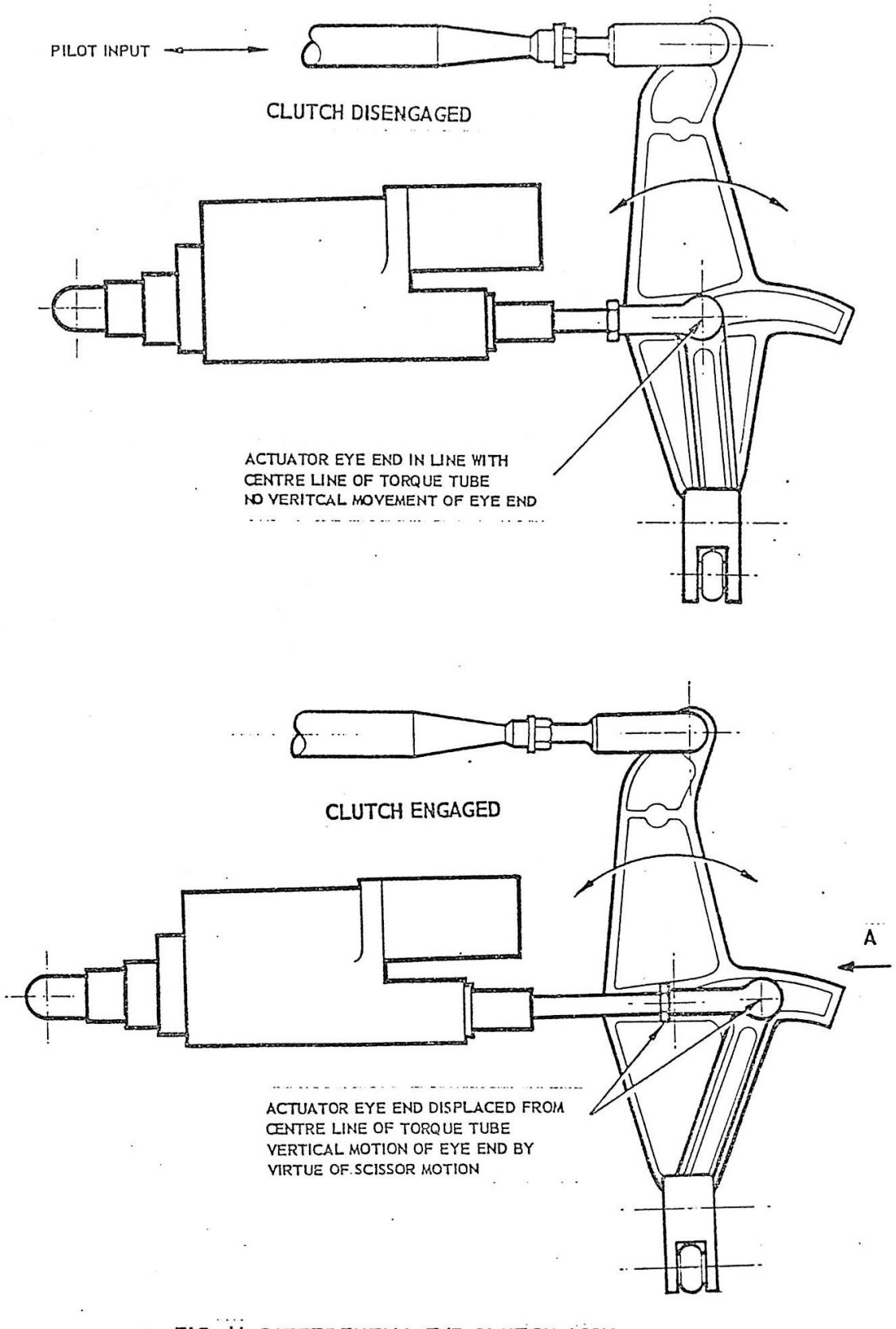

FIG. 11 DIFFERENTIAL T/P CLUTCH ASSY.

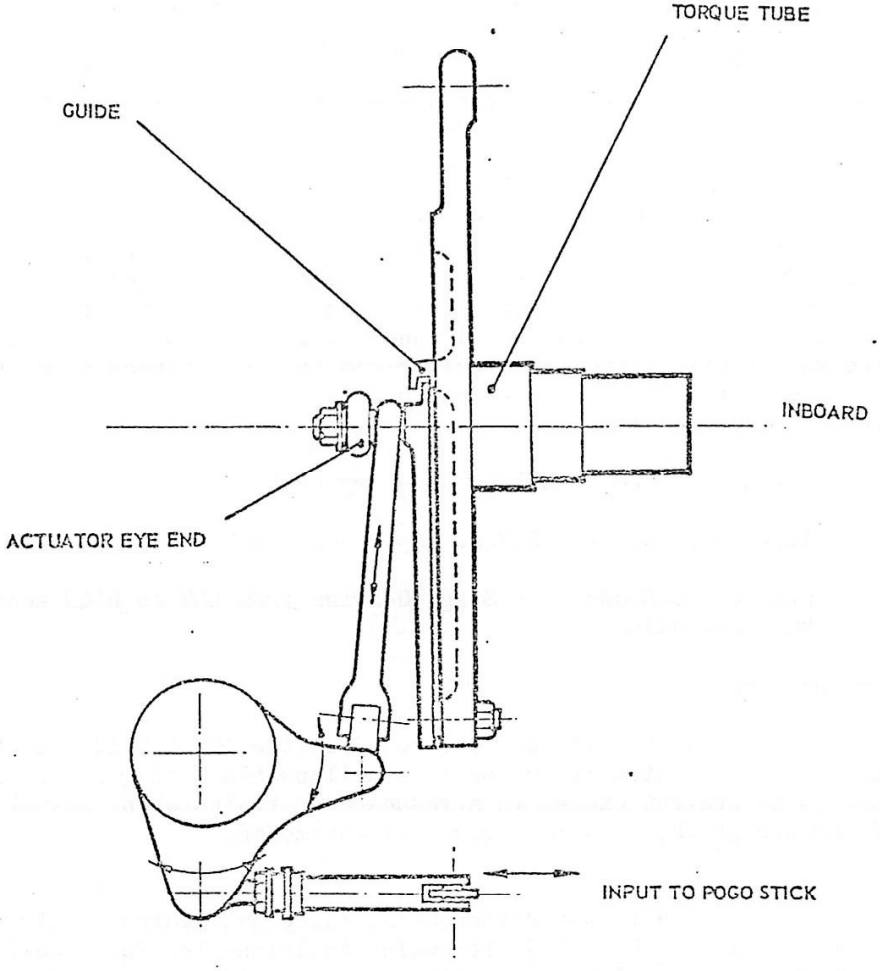

FIG. 12 DIFFERENTIAL T/P CLUTCH ASSY.(CONT'D)

3.5.2. (contd)

Selection of the switch down to Emergency engages both No.1 and No.2. motors to drive the actuator ram to the retracted, declutched position cancelling differential tailplane authority.

NOTE:

If the RED C.W.P. caption should illuminate during normal flight it is possible to try reset the system by selecting Emergency and then back to Normal. If the circuit does not re-arm itself the switch should be selected to Emergency and left there.

Max Mode

The Max Differential Spin Recovery Mode is a configuration required if the aircraft inadvertantly gets into a spin. In this situation selecting the switch to MAX is achieved by lifting the switch guard. This automatically moves the switch to the MAX position and engages both No.1. and No.2. motors of the actuator. The motors will drive the actuator ram to the extended or clutch engaged position - providing maximum differential tailplane authority. This selection will also:-

Illuminate the BLUE Spin Recovery Light.

Illuminate the RED C.W.P. caption of DIFF.

Change the Rudder Two Stage Gearing from LOW to HIGH sensing MOD. 234 only.

3.6. Spring Strut.

Connected into the control run from the 'Crab Unit' to the Watts Linkage in the aircraft spine is a collapsable spring strut, its purpose is to prevent excessive stresses and strains when control surfaces are at their maximum range of movements.

3.6.1. Operation.

With the differential tailplane clutch at its maximum authority i.e. $\pm 6^{o}$ of differential tailplane for full spoiler demand. Full spoiler demand will give a tailplane slab movement of 6° up for one side and 6° down for the opposite side. If a full tailplane demand of 25° is now made, there is only 19° range of movement available to its limit stop. In this case the remaining 6° travel will be taken up by the spring box through the differential tailplane clutch linkage.

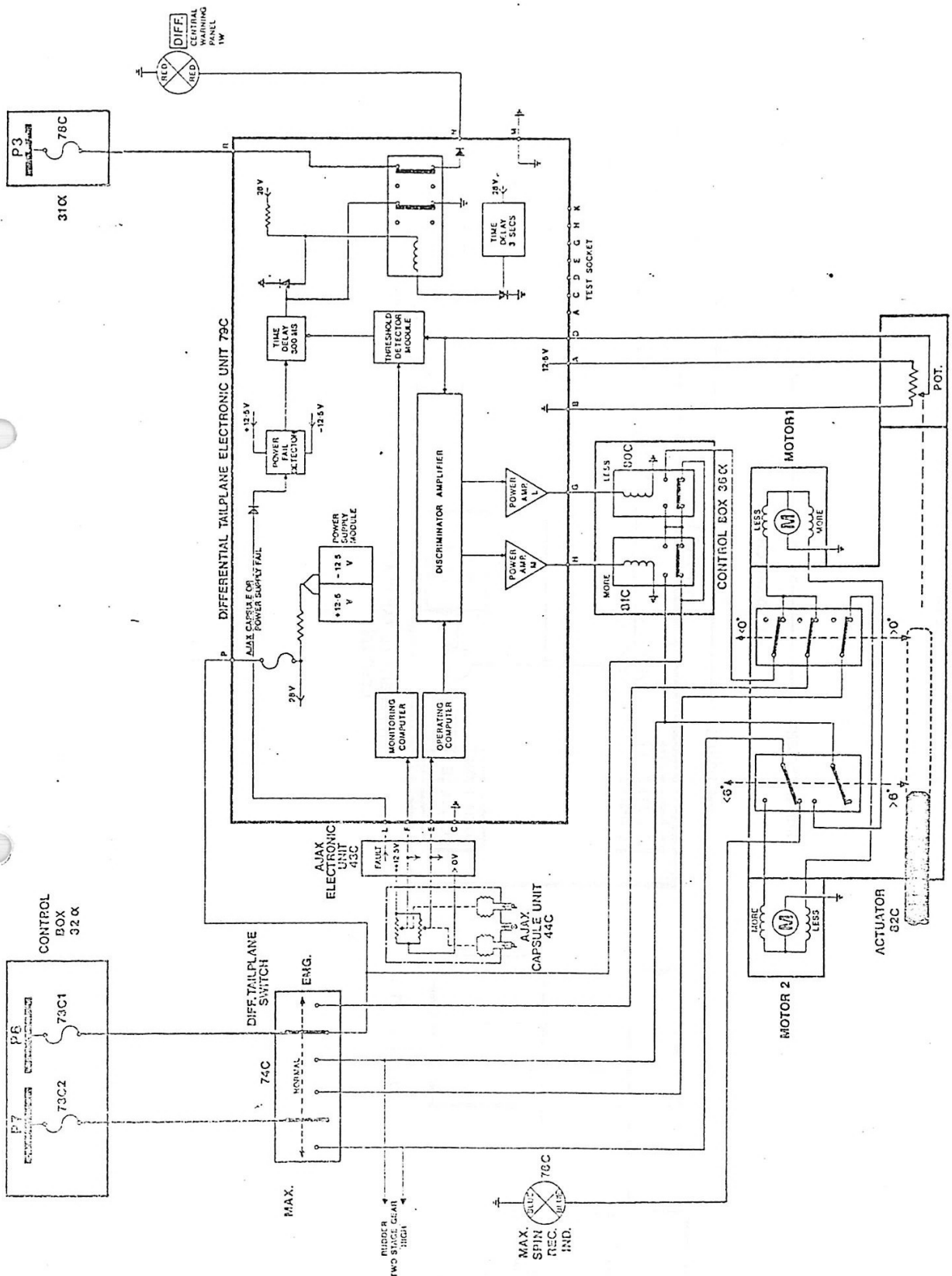

FIG. 13 DIFFERENTIAL TAILPLANE

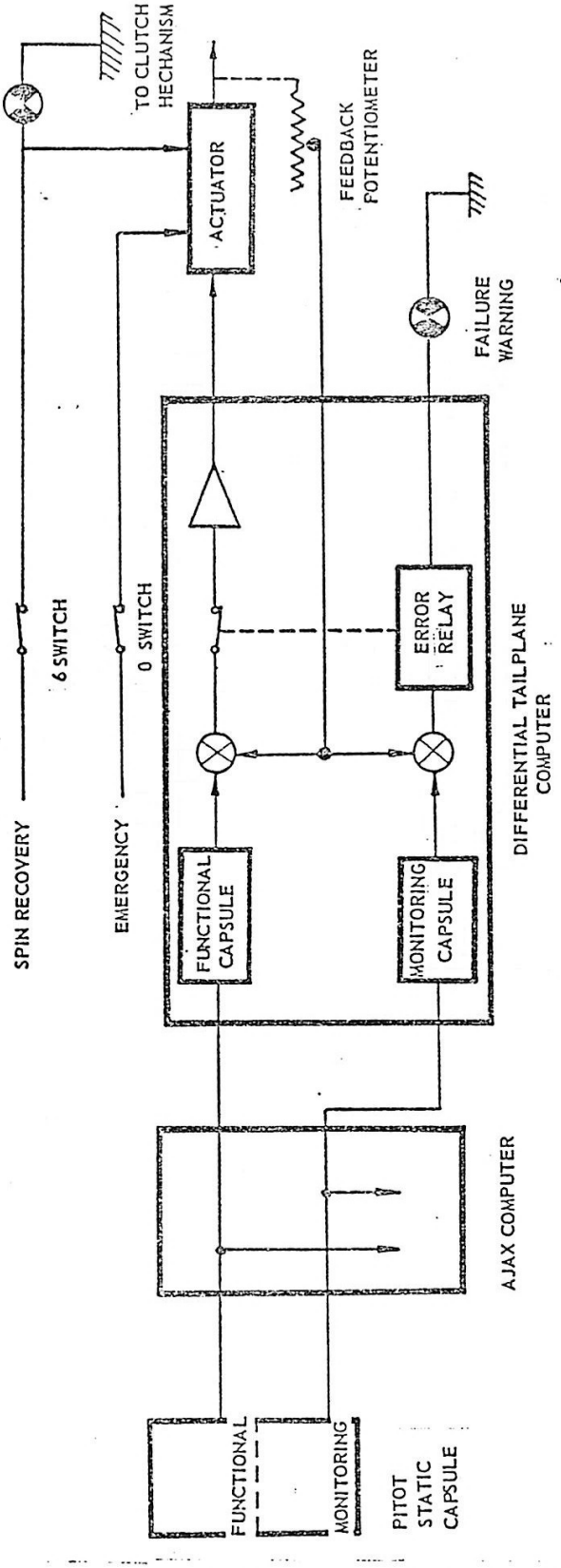

FIG. 14 DIFFERENTIAL TAILPLANE FUNCTIONAL DIAGRAM

CHAPTER. 4.

PITCH/TAILPLANE CONTROL.

CONTENTS

1. PITCH CONTROL.
1.1. INTRODUCTION.
1.2. DESCRIPTION.
1.3. OPERATION.
1.4. BALANCE WEIGHTS.

2. NON LINEAR GEARING.
2.1. DESCRIPTION.
2.2. OPERATION.

3. DASH-POT DAMPER.
3.1. INTRODUCTION.
3.2. DESCRIPTION.
3.3. OPERATION.

4. PITCH TRIM.
4.1. INTRODUCTION.
4.2. DESCRIPTION & OPERATION.
4.3. TRIM ACTUATOR.

CHAPTER 4.

ILLUSTRATIONS.

FIG.1. PITCH CONTROL SYSTEM.

FIG.2. TAIL PLANE SCHEMATIC.

FIG.3. TAIL LINKAGE.

FIG.4. D.N.L. NON-LINEAR GEAR.

FIG.5. A.M.D. B-A DASH POT ASSEMBLY.

FIG.6. PITCH AND EMERGENCY PITCH TRIM SWITCHES AND INDICATORS.

FIG.7. TAILPLANE TRIM.

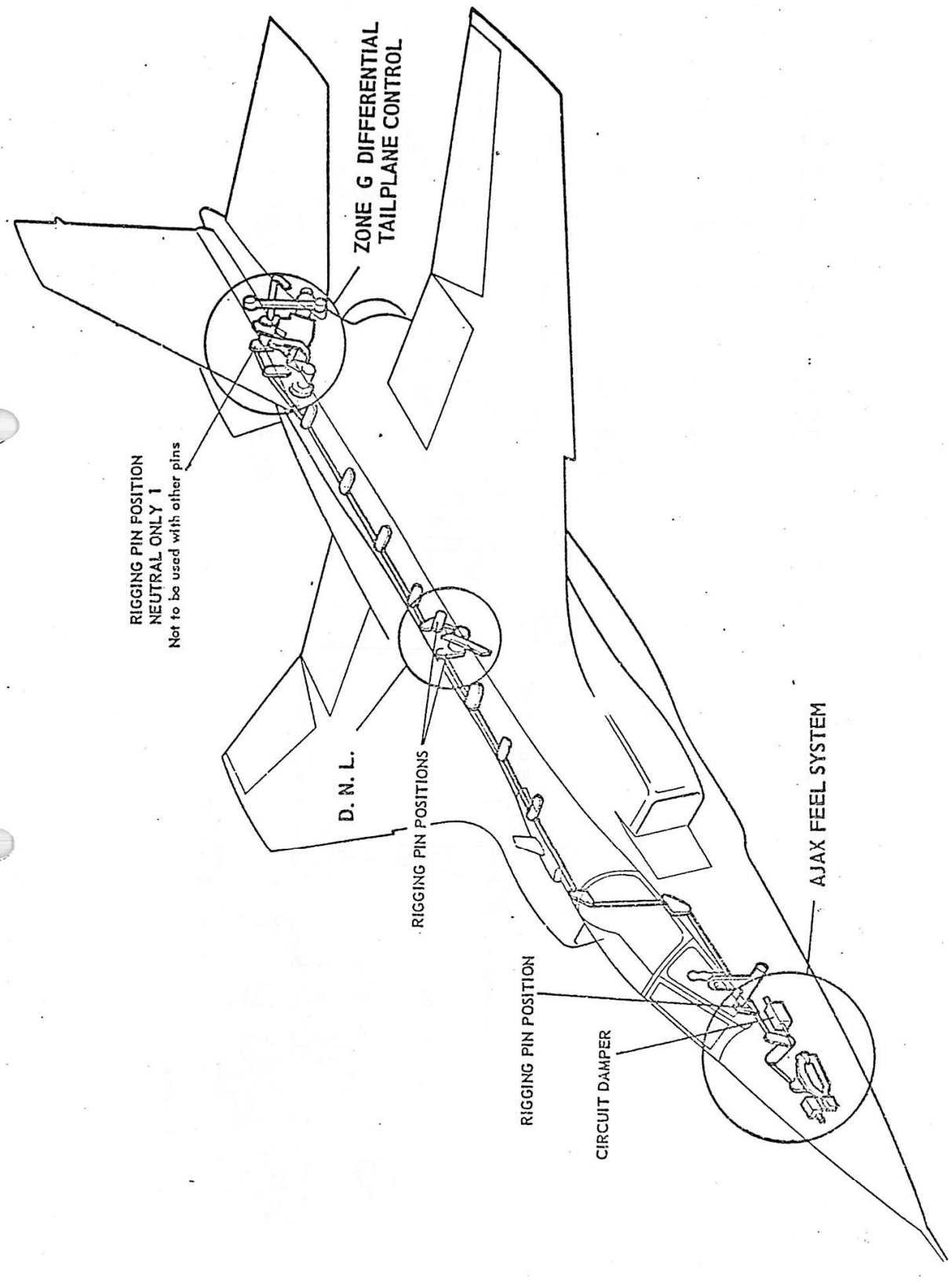

FIG.1 PITCH CONTROL SYSTEM

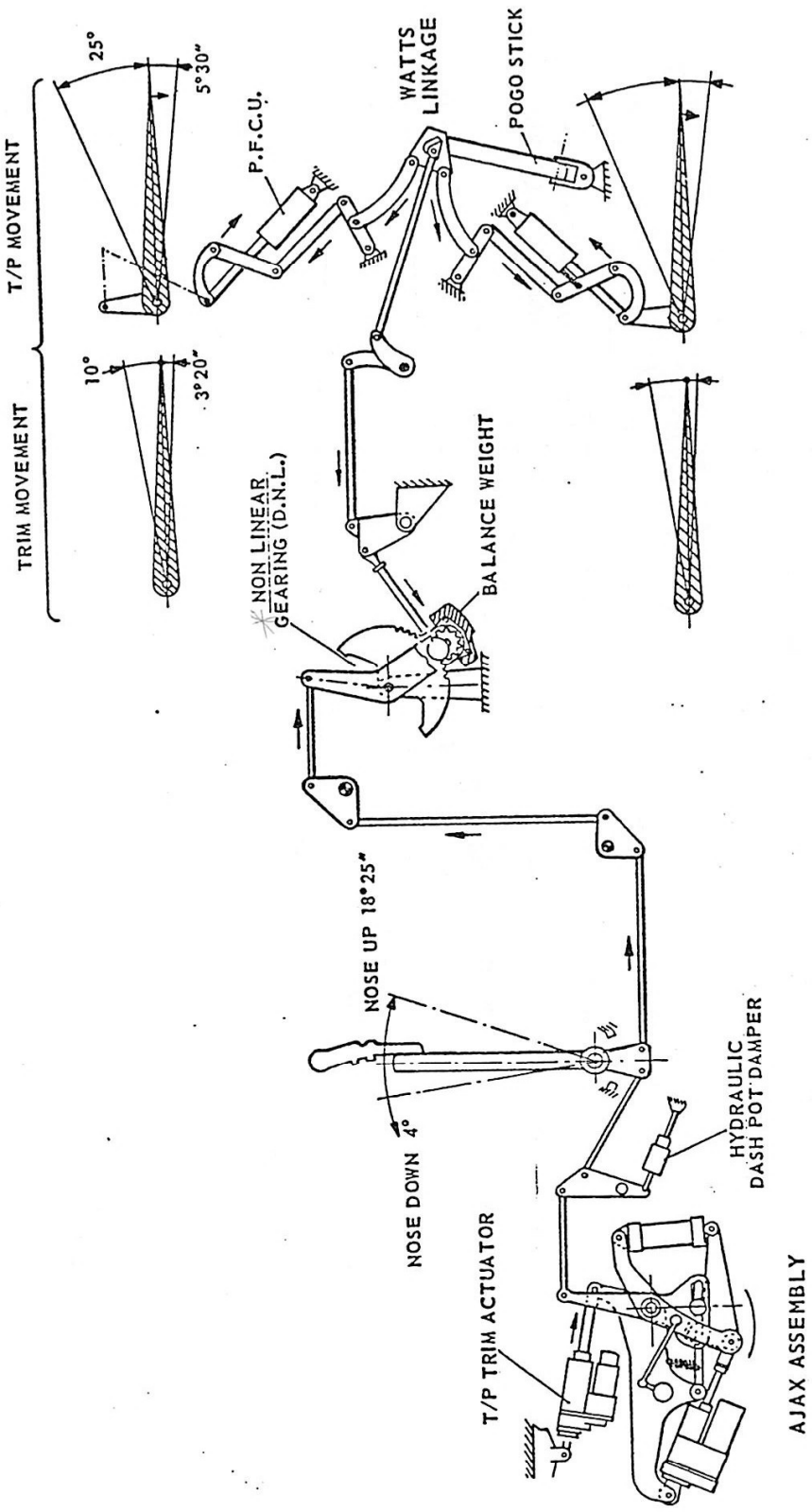

FIG.2 TAILPLANE CONTROL SCHEMATIC

1. PITCH CONTROL.

1.1. Introduction.

Pitch control is achieved by Tailplane movement. The tailplane consists of two independent halves which are not mechanically linked together, each half being operated by a separate P.F.C.U. the two halves move simultaneously to provide for normal pitch response and independently to achieve differential control. Introduced into the control run is an artificial 'q' feel unit, circuit hydraulic damper and trim facilities. The control run also contain circuit balance weights.

1.2. Description.

The tailplanes are not linked together mechanically, each half of the tailplane being attached to the rear fuselage by means of an articulated spigot moving in two bearings, with an end stop. A wishbone lever on the spigot connects to the output from the P.F.C.U. to give a range of + 5° 30' +0' 25°+ 0' of incidence.
-30' - 30'

The tailplane P.F.C.U's receive simultaneous command signals from the pilot and an electrical source originating from the auto-stabiliser gyro. The output to the control surface will assume a displacement which is the sum of the two demands. The stabiliser jack is provided with artificial damping and gives a range of auto-stabilisation control of $\pm$ .75°.

To counteract the pitching movement caused by the spoilers being extended, the spoilers and tailplane circuits are electrically inter-connected so that when either spoiler extends the tailplane angle progressively increases, at the maximum spoiler angle of 45° the tailplane angle will have increased by 1°. This increase of tail-plane angle occurs with or without differential tailplane.

To minimise pitch alterations on airbrake extensions, especially when unbalancing loads are carried, an interlink mechanism is fitted which when operated by an electrical actuator will give a proportional 'Nose down' action via pitch servo controls up to 1.2° maximum 'Nose down' on full airbrake application.

1.3. Normal Operation.

Control column for conventional tailplane operation is trans-mitted by a transverse torque tube, out of the cockpit into the un-pressurised zone on the starboard side of the fuselage. From here it is connected by levers and push-pull rods in a forward direction to the input of the Ajax Artificial 'q' Feel and Hydraulic Damper Dash Pot assembly and rearwards to Frame 9 where it changes direction up to the spine. The run continues along the starboard side of the spine to the Non Linear Gearing (N.L.G). assembly and back to the input lever of the Watts Linkage.

Normal tailplane movement is achieved by the pilot's input at

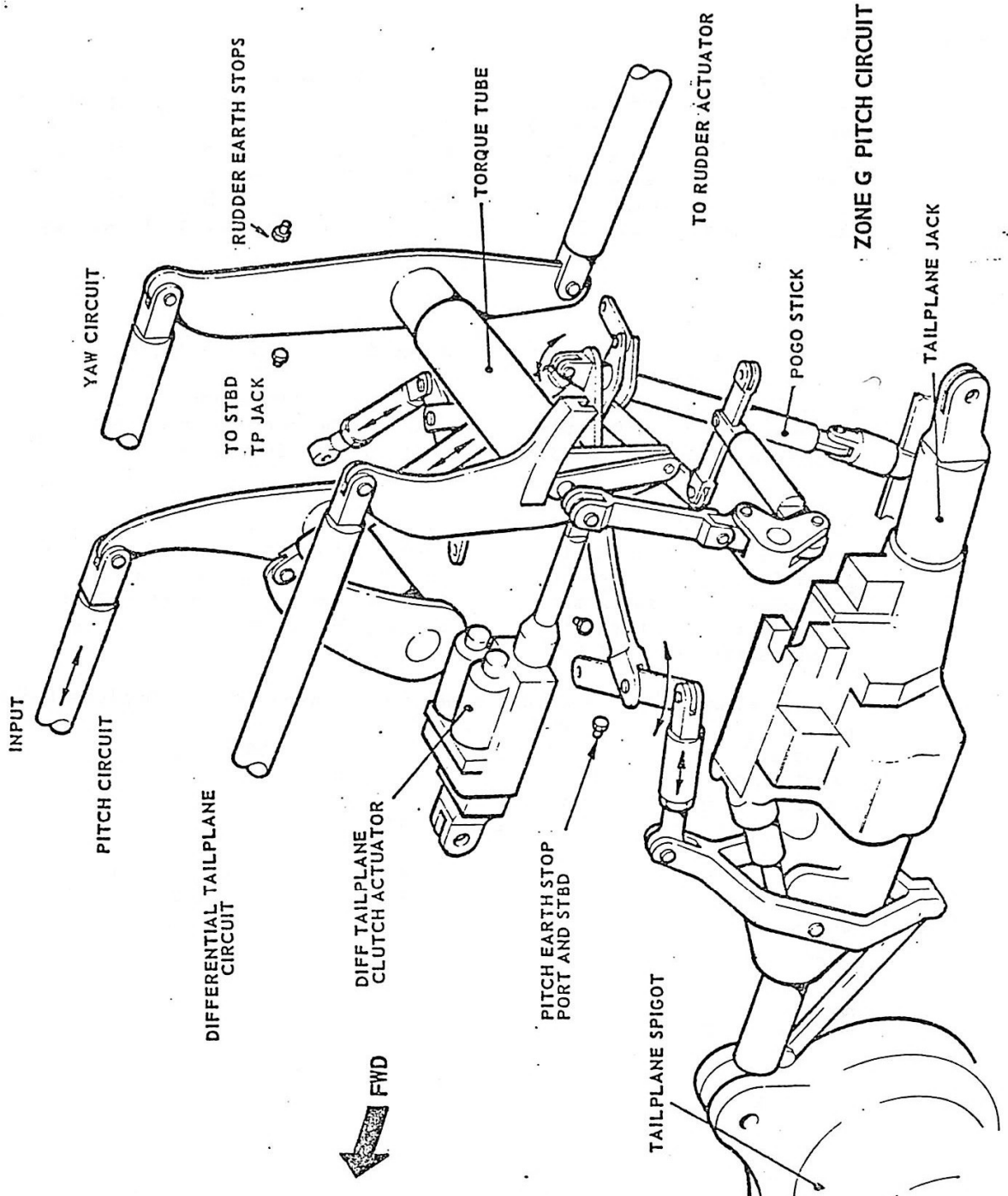

FIG.3 TAIL PLANE LINKAGE

1.3. (contd)
(1) being transferred through linkages (2), (3), (4) and (5) to a rod (6) which is anchored at it's base on a spherical bearing. For normal operation this rod moves only in a fore and aft plane and the input to the P.F.C.U's via links (7), (8) and (9) are equal.

1.3.1. Differential Operation.

In addition to the conventional tailplane input, another linkage picks off the spoiler control movement from a point just before the caliper assembly and transmits this movement along the port side of the spine to the differential lever in the tailplane linkage, as previously described in Chapter 3. Spoilers.

1.4. Balance Weights.

The effects of gravity and vertical inertia on the control runs are balanced by weighted levers and inertia weights which are fitted to the N.L.G. assembly, control column torque tube and control rod pivot levers.

2. NON-LINEAR GEARING.

2.1. Description.

The purpose of the Non-Linear Gearbox assembly is to prevent over sensitively of the tailplane controls about its neutral setting. The non linear gearing modifies the relationship between control column movement and that of the control surface. Deflections of the control surfaces are not proportional to those of the control column about neutral but gradually become proportional at the maximum angle of travel. This resultant reduction in sensitivity improves handling accuracy about the neutral position avoiding control deflections which would induce excessive stresses and strains on the aircraft structure.

2.2. Operation.

The non-linear gearbox converts linear movement of the control column into non-linear movement with a variable gain depending on whether the movement is about the control column neutral position or maximum angle of deflection.

The principle consists of the conversion of linear control run movement upstream of the NLG into a non-linear movement downstream. It is based on a system of reduction gears, the ratios of which will vary depending on whether the control column is near the neutral position or near the maximum angles of deflection. In the first case, for a given control column deflection, the control surface deflections are small. In the second case, for the same control column movement the control surface deflections are much greater. The movement of the upstream control run is transmitted to the NLG by a lever to which a small gear is attached to its base.

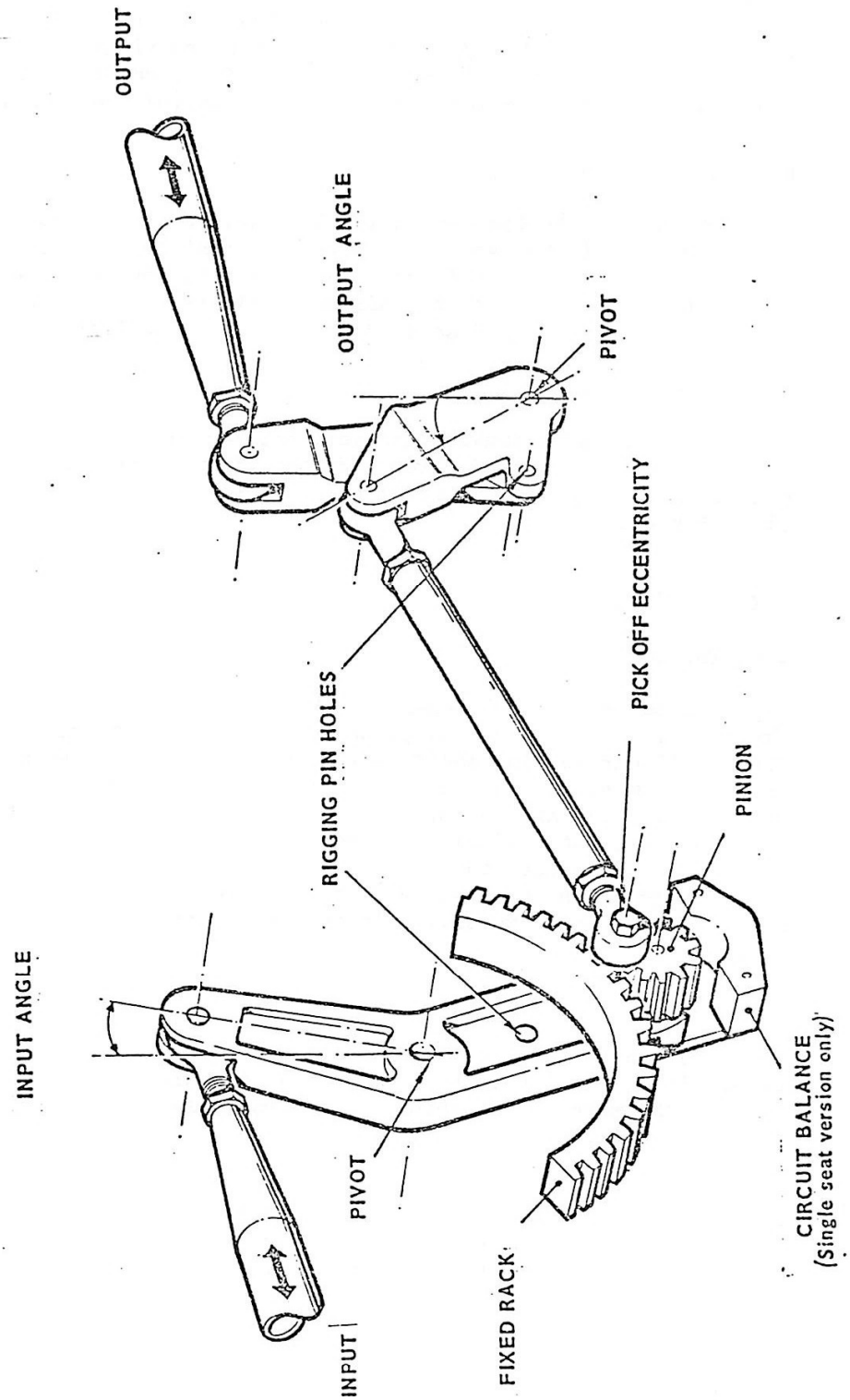

FIG. 4 D.N.L. NON-LINEAR GEAR

2.2. (contd)

The gear meshes with a sector quadrant. As the gear rotates about the quadrant and control rod which is fixed to the gear also moves transferring movement to the downstream control run to the P.F.C.U.

3. DASH-POT DAMPER.

3.1. Introduction.

A hydraulic filled dash-pot damper is situated in the control run between the cockpit and the AJax 'q' Feel Unit to damp out any tailplane control run oscillations and to add to the static forces of the Ajax system spring box a fluid damping force, proportional to the rate of control column movement and aircraft forward speed and altitude.

3.2. Description.

The dash-pot damper has an internal hydraulic circuit, and is independant of the aircraft systems. This circuit is slaved to the aircraft speed and height by an integral air pressure capsule which is subjected to pitot/static pressures, and alters the position of a throttle valve. The system has a hydraulic accumulator with a regulated heater and a fluid level monitoring device. The heater supply is controlled by the PITOT PROBE HEATER switch in the cockpit. The temperature of the hydraulic fluid is thermostatically controlled to keep the fluid temperature at $10 \pm 3^{\circ}C$ under extreme temperature conditions. A second thermostat which is a safety thermostat switches off the heater circuit at $40 \pm 5^{\circ}C$ in the event of a regulating thermostat failure.

NOTE:
Since failure of the safety thermostat is a dormant fault, the temperature reached if the heater operates continually is an acceptable value, and does not jeopardise equipment safety.

Fluid level of the dash-pot is indicated by a RED warning lamp located in the recess behind access panel No.134 on the starboard side of the fuselage between station 6180 and 5902. When the lamp is lit the dash-pot requires filling. This check can only be made with an A.C. electrical power supply available.

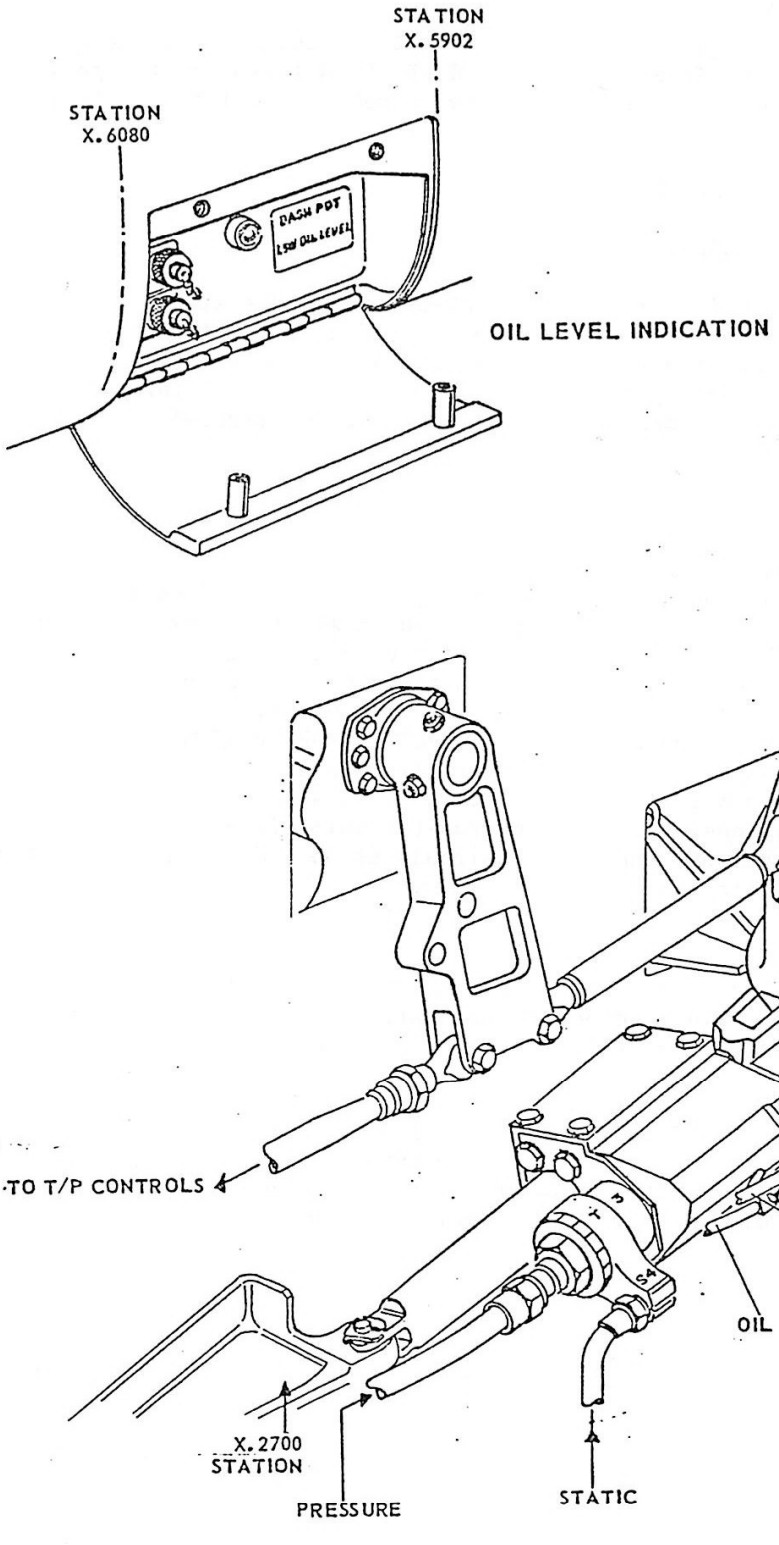

FIG.5 A.M.D. B–A DASH POT ASSEMBLY

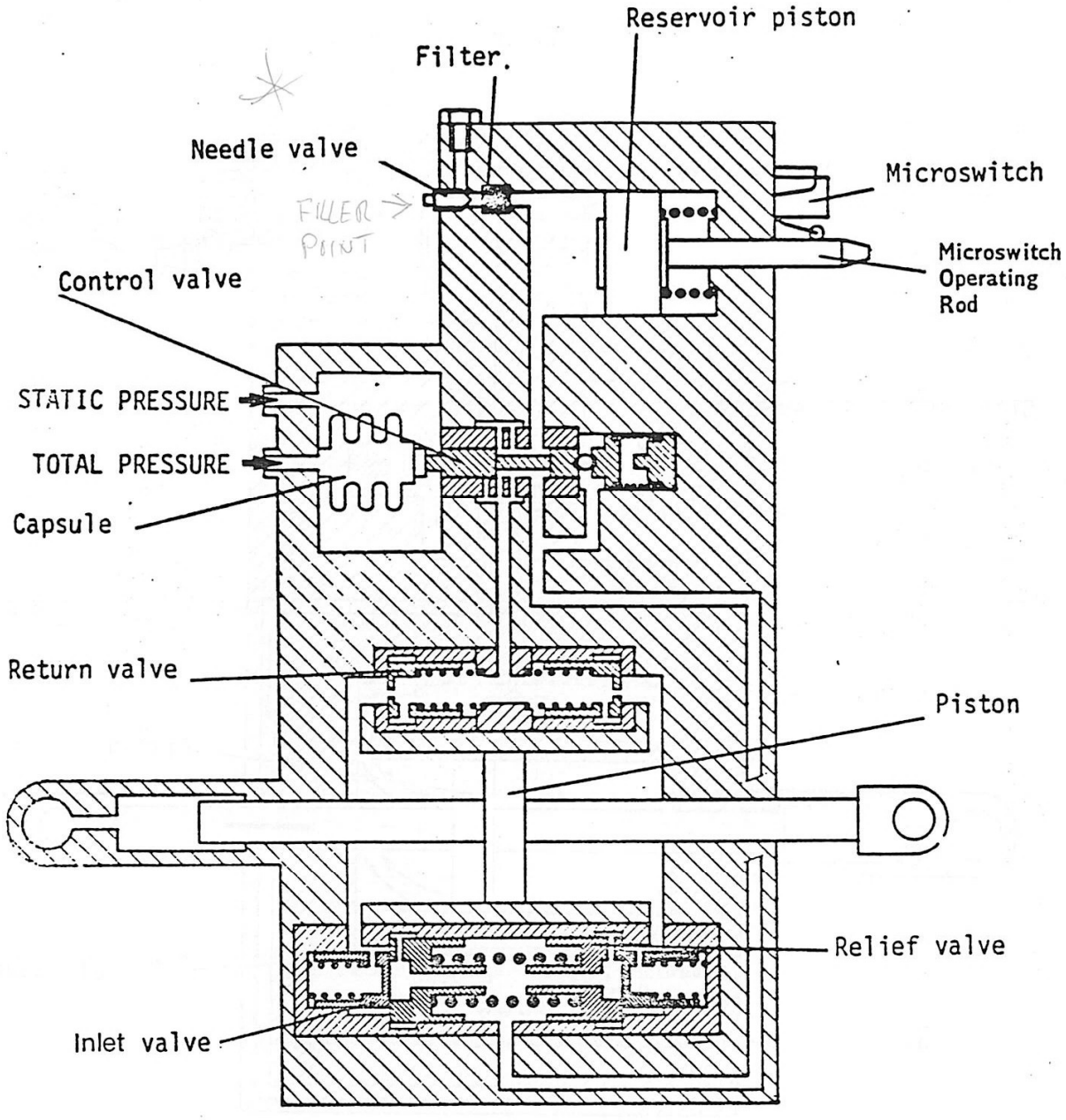

AMD-BA DASHPOT

FIG. 5A

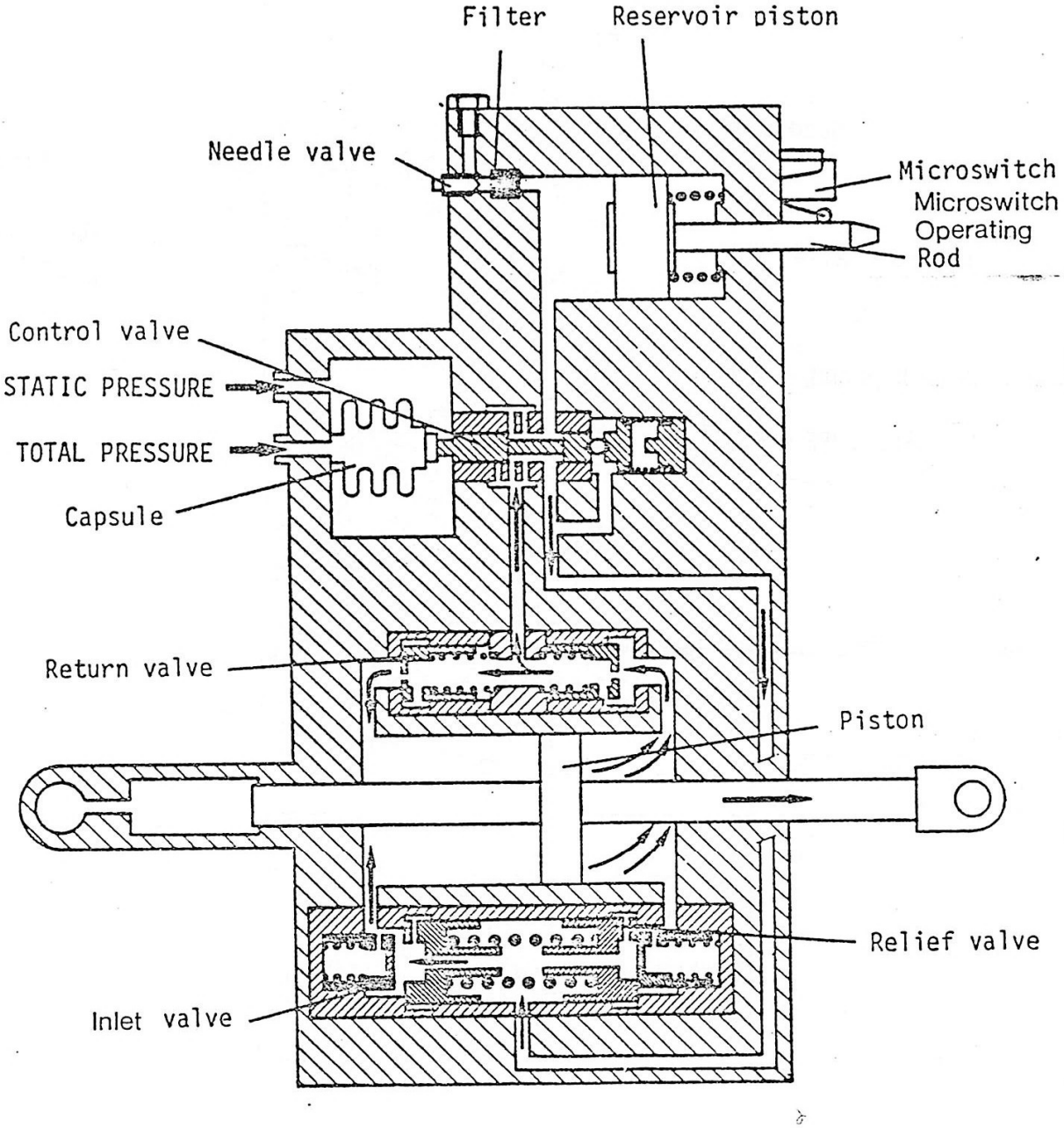

AMD-BA DASHPOT

FIG. 5B

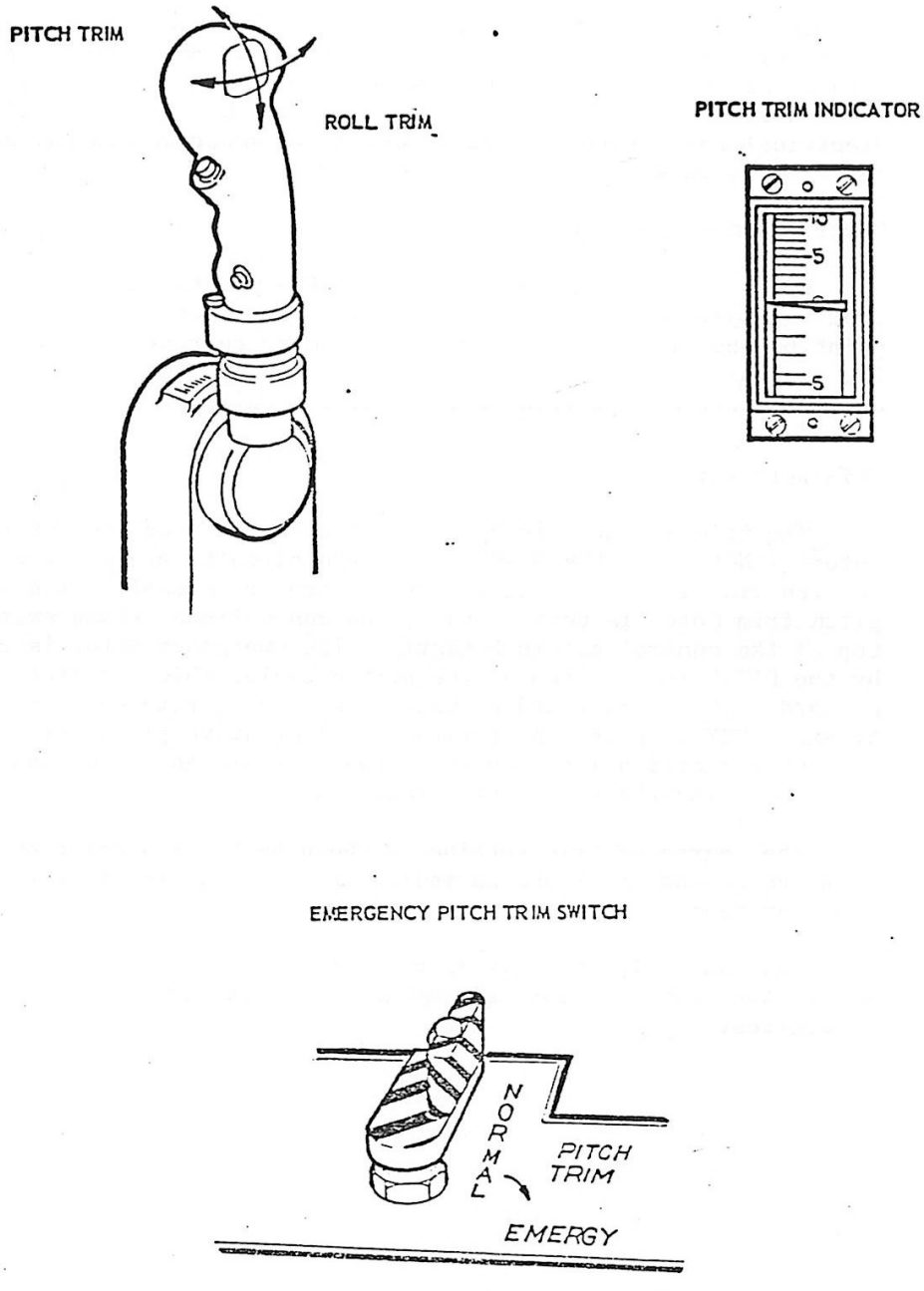

FIG. 6 PITCH AND EMERGENCY PITCH TRIM SWITCHES AND INDICATORS

4. PITCH TRIM.

4.1. Introduction.

The aircraft is trimmed longitudinally by a trim actuator driven by two reversible motors. The actuator moves the control column and the AJAX UNIT mechanism the required amount to displace the control surface. The pitch trim circuit has two independant electrical power supplies necesitating two separate control switches, referred to as NORMAL and EMERGENCY.

4.2. Description & Operation.

Pitch trim is achieved by biasing the pilots control column from the AJAX UNIT. The AJAX beam is moved about its central axis point by the trim actuator ram extending or retracting which moves the control column without interfering with the 'q' feel of the Ajax unit and transmits motion to activate the tailplane P.F.C.U.

'q' FEEL IS SPEED

4.3. Trim Actuator.

The trim actuator is operated by either of the two reversible motors - NORMAL or EMERGENCY. The two circuits are separately powered via circuit breakers on the starboard console. The normal pitch trim motor is controlled by the conventional thumb switch on the top of the control column handgrip. The emergency motor is controlled by the PITCH TRIM switch on the port console, which is protected by a guard. When this guard around the switch is rotated from NORMAL to EMERGENCY in order to operate the alternative pitch trim circuit, its turning action isolates the normal circuit and motor and brings into operation the emergency circuit and motor.

The degree of trim setting is shown by the indicator on the port instrument panel and an indicator potentiometer is attached to the ajax beam.

Maximum tailplane trim is controlled by internal limit switches within the trim actuator, giving an end to end travel of approx 14 degrees.

S/W LEFT IN EMERGENCY POSITION

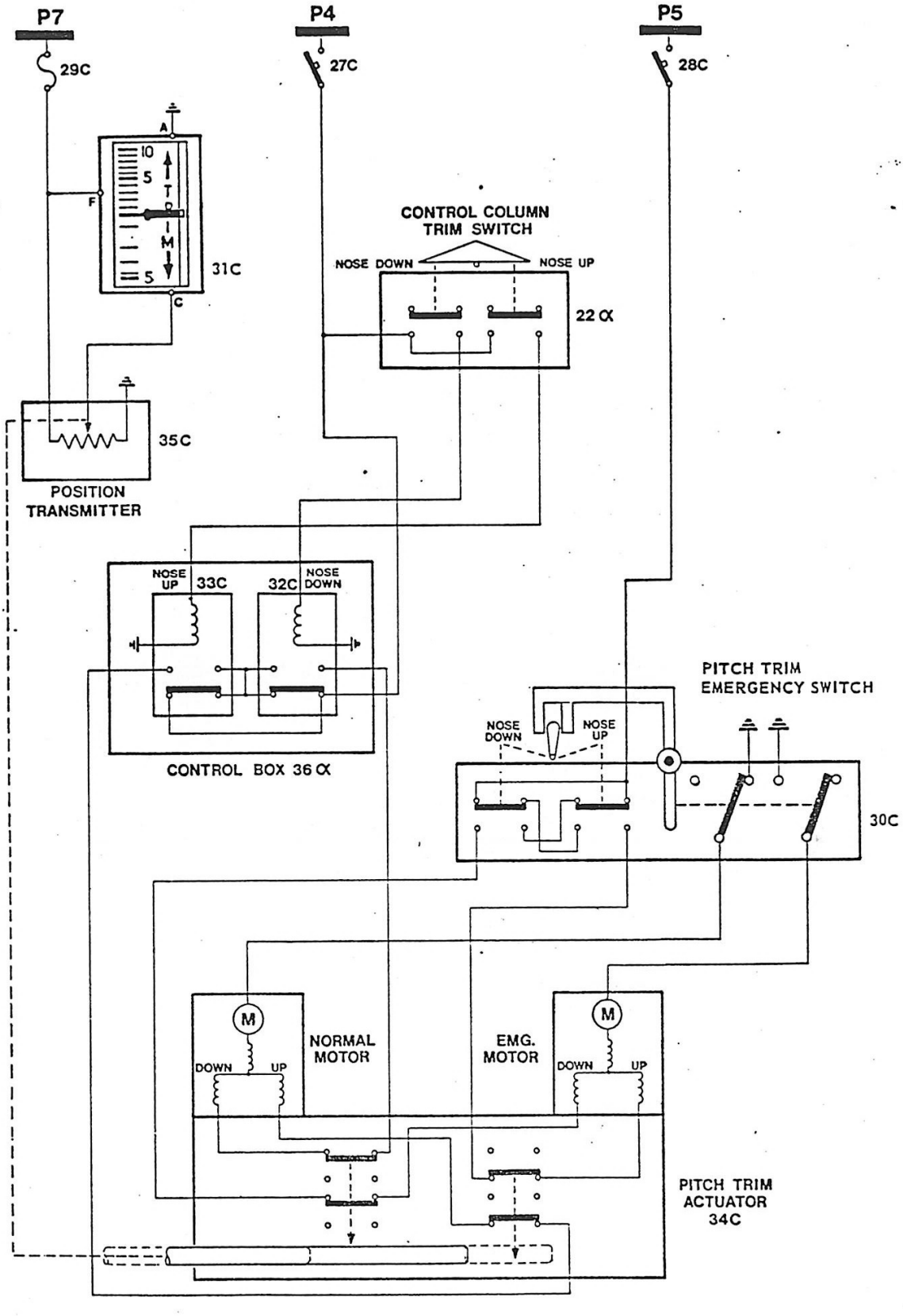

FIG.7 TAILPLANE TRIM

CHAPTER. 5.

AJAX ARTIFICIAL 'Q' FEEL.

CHAPTER. 5.

CONTENTS.

1. ARTIFICIAL 'Q' FEEL.
1.1. INTRODUCTION.
1.2. DESCRIPTION.
1.3. CONTROLS & INDICATIONS.
1.4. SYSTEM COMPONENTS.
1.4.1. MECHANICAL ASSEMBLY.
1.4.2. AJAX ACTUATOR MOTOR ASSEMBLY.
1.4.3. CAPSULE UNIT.
1.4.4. ELECTRONIC UNIT.
1.4.5. OPERATION.
1.4.6. INDICATED FAILURE CAPTION.
1.4.7. TAILPLANE TRIM.

ILLUSTRATIONS.

FIG.1. AJAX ARTIFICIAL FEEL UNIT.
FIG.2. CONTROLS & INDICATION.
FIG.3. AJAX MOTOR ASSEMBLY.
FIG.4. AJAX ELECTRICAL 'q' FEEL CIRCUIT.

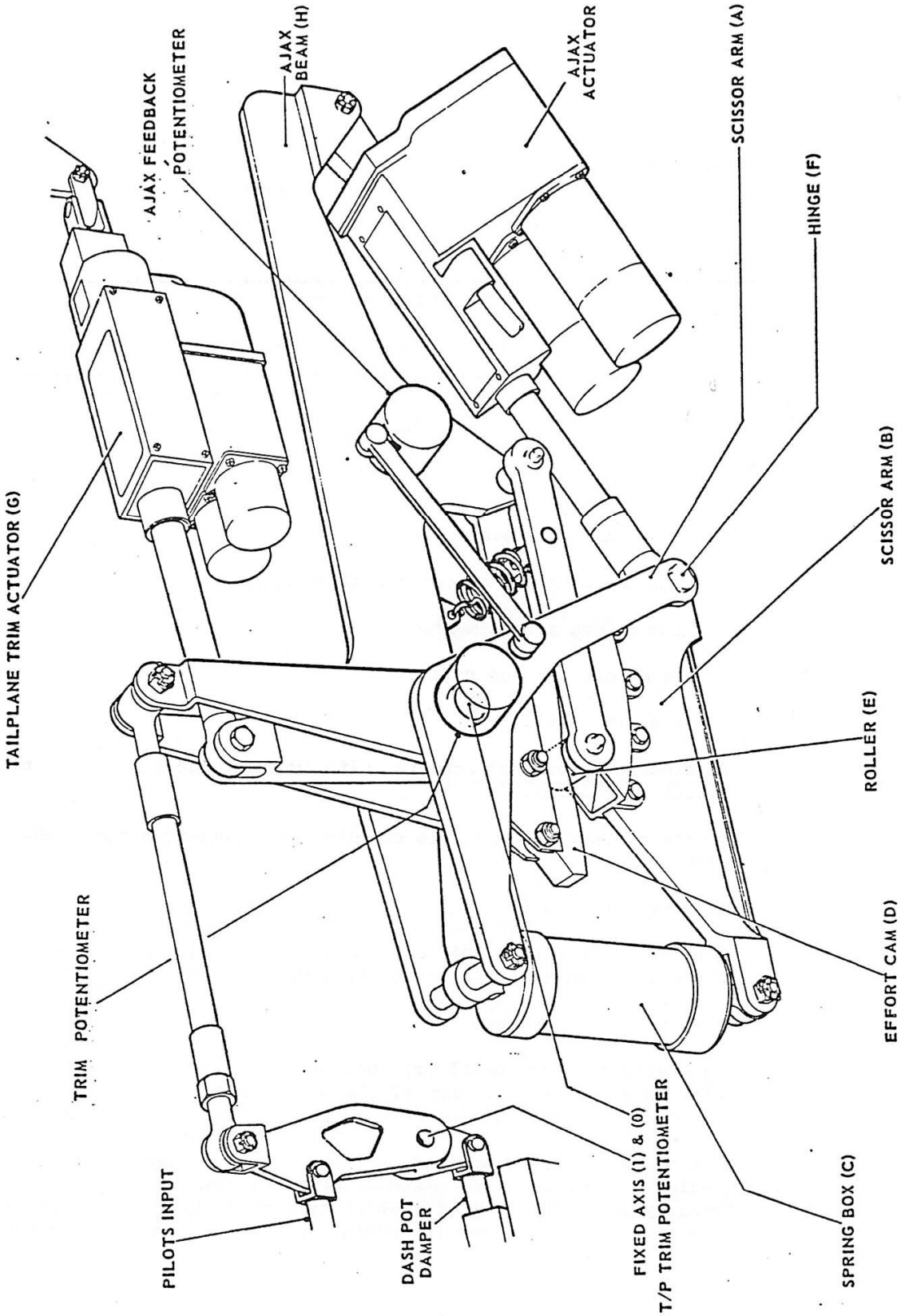

FIG. 1 AJAX ARTIFICIAL FEEL UNIT

1. AJAX ARTIFICIAL q FEEL.

1.1. Introduction.

As the tailplane control is a fully powered control system the pilot is provided with a means of artificial feel. The artificial feel assembly in the tailplane control circuit is an AJAX unit.

The Ajax assembly is basically a Springbox with a variable spring tension, dependant on airspeed and altitude, controlled by an electrical actuator. The electrical actuators movement is created by the aircrafts PITOT/STATIC system.

Together the spring tension and the Pitot/Static systems vary the pilots control column loadings relative to the speed and height of the aircraft. A limit is put in the Ajax system dependant on a MACH N° of .95 or 450 Knots (Post MOD 787).

1.2. Description.

The Ajax system consists of:-

A variable lever arm assembly containing:-

A scissors arrangement.

An effort cam and roller.

A spring box.

An electro-mechanical actuator with two electric motors and two clutch assemblies.

A unit of four Pitot/Static capsules with potentiometer pick-offs.

An Electronic unit.

A position feed-back unit comprising a potentiometer of two elements operated by the variable lever arm assembly.

Pilots selector switch.

An electrical mechanical trim actuator.
This is not an actual part of the Ajax system, but is used in conjunction with the Ajax unit to provide trim facilities.

The system can be described as part mechanical and part automatic positioning. The mechanical assembly consists primarily of an electrically controlled actuator which by displacing the fulcrum of its levers varies the forces introduced into the control run by the spring box.

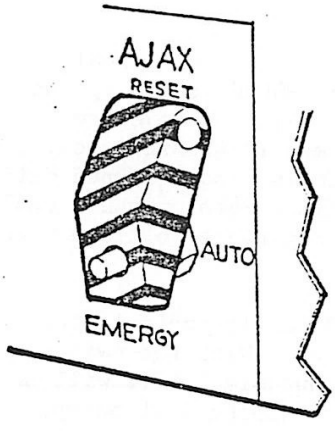

AJAX

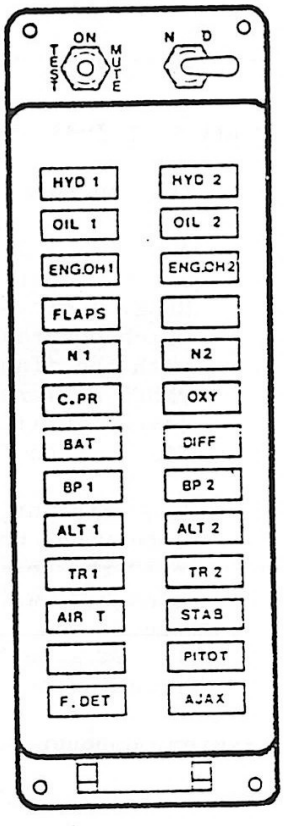

FIG. 2 CONTROLS AND INDICATION

1.2. (contd)

The automatic positioning system essentially comprises of a capsule unit which receives air pressure data in the Pitot/Static system and an electronic unit which receives speed and altitude signals from the capsules, converting them into commands to operate the actuator thus driving the mechanical assembly.

A dash pot (as previously mentioned) is associated with the system its purpose being:-

— To add to the static forces of the AJAX system spring box a fluid damping force proportional to the rate of control column movement and a function of the aircraft speed.

— To damp out any oscillations in the control run.

1.3. Controls & Indications.

The controls and indicators consist of:-

A selector switch located on the port instrument panel which has two positive positions AUTO & EMERGENCY and a spring loaded RESET position. The switch is protected by a cover guard flap which ensures that the switch is locked in the AUTO position with the flap guard down. The system is also equipped with an AMBER failure caption on the centralized warning panel who's circuit will also cause the attention getters to flash when illuminated.

The selector switch in the cockpit directly controls the two electrical motors of the AJAX actuator. With the switch set to AUTO the normal motor will run continuously but it will be de-clutched, with the EMERGENCY motor remaining stationary. When the switch is set to EMERGENCY the reverse will apply. If the RE-SET selection is made the system will still employ the normal motor.

1.4. System Components.

1.4.1. Mechanical Assembly.

The arm (A) and (B) of the scissors are joined at (F) and the free ends are connected by the spring box (C).

The assembly pivots around the fixed axis (O) which is attached to the aircraft structure.

The effort cam (D) pivoting around the same axis (O) spreads the scissors, through the medium of roller (E), against the resistance of the spring box.

The cam is connected to the pilot's tailplane control and the resultant variable loading on the cam is transmitted back to the control column to give a resistance effort related to flight conditions.

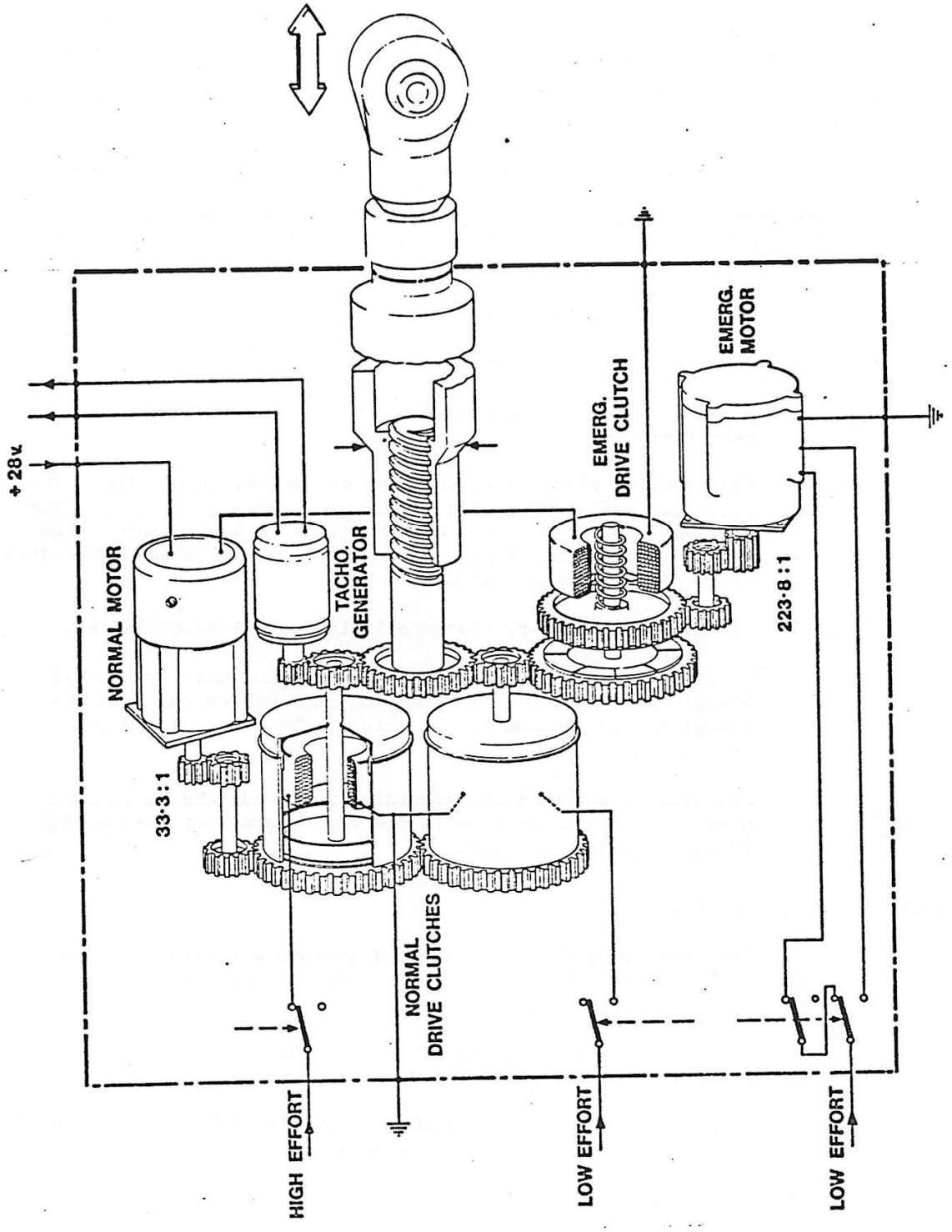

FIG. 3 AJAX MOTOR ASSEMBLY

1.4.1. (contd)

Also attached to the assembly are two position potentiometers. An auxiliary arm connected to arm (A) transmits the arm position via a slave cam to a potentiometer indicating actuator ram position. The second potentiometer indicates the amount of tailplane trim in use.

N.B.

Connected into the control circuit is the AMD - BA hydraulic dash-pot in the vicinity of the AJAX assembly, which will damp out any oscillations provoked by rapid stick action, and assist normal spring feel to the tailplane control out of the range of controlled Pitot/Static operation.

1.4.2. Ajax Actuator Motor Assembly.

The actuator assembly comprises of:-

A 'Normal' motor, which may be used in 'AUTO' or the Re-Set Selection.

Two magnetic clutches which, when energised, couple the normal motor to position the Ajax actuator for greater or less effort, according to the MACH No. of the aircraft at the time. High effort is required at speeds exceeding Mach 0.95 and low effort at speeds less than Mach 0.95.

An 'Emergency' motor, (for use if the normal motor fails).

A direct driving emergency clutch whose solenoid is normally energised to de-couple it from the jack but which, when de-energised, is coupled to the actuator by means of its own spring action.

Position feed back tacho-generator who's purpose is to feed movement information back to the Electronic Unit when change in position is satisfied.

1.4.3. Capsule Unit.

This unit comprises two pairs of aneroid capsules. One pair receives pitot information from Pitot head T2 and static vent S4, the other from T3 and S6.

Expansion and contraction of the capsules is governed by the difference between differential pressure and static pressures.

Thus the signals generated at the capsule pick-off are a function of a Mach.No. on the one hand and true static on the other.

1.4.4. Electronic Unit.

The electronic unit contains:-

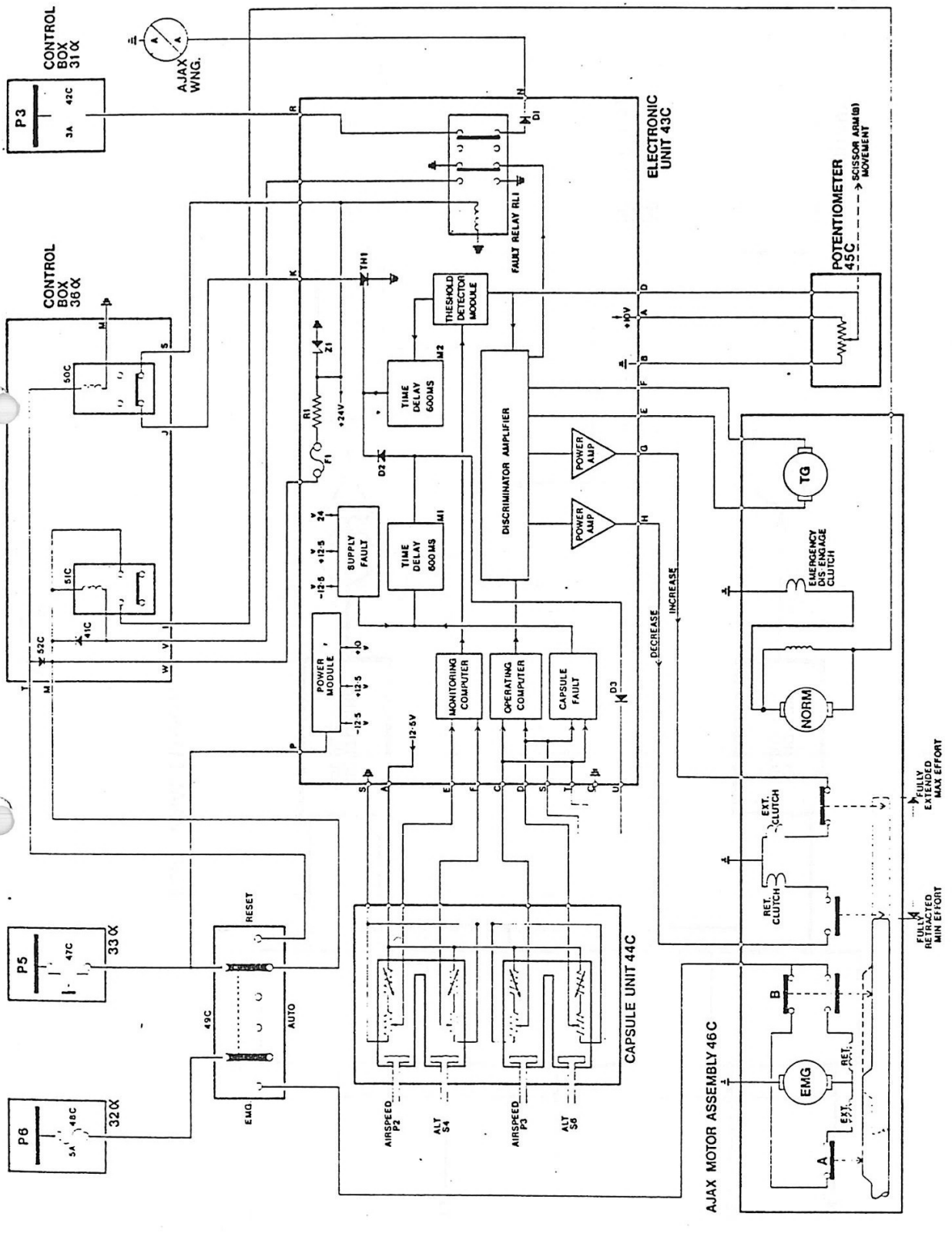

FIG.4 AJAX ELECTRIAL 'Q' FEEL CIRCUIT

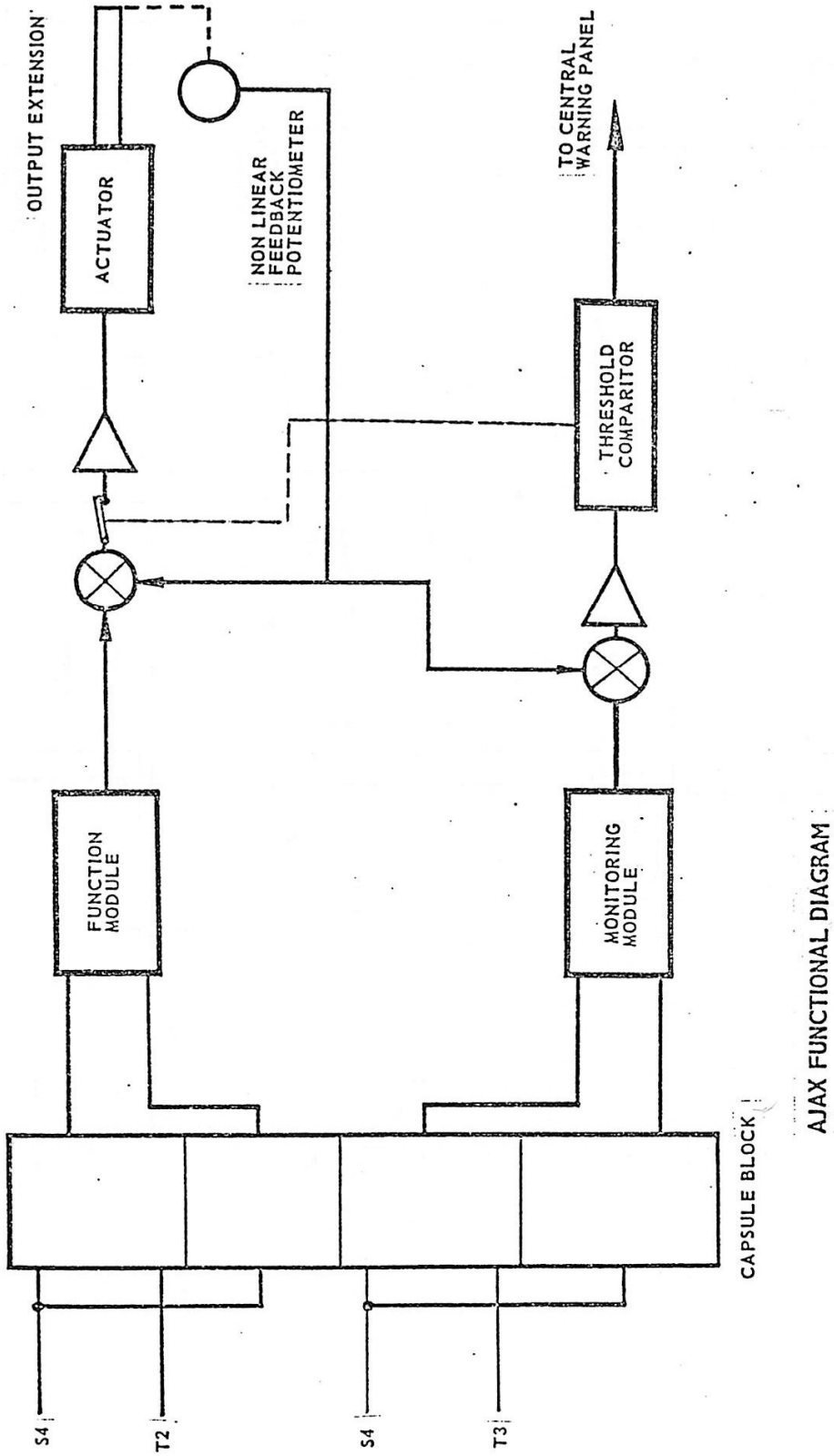

FIG.4 A AJAX ELECTRICAL 'Q' FEEL CIRCUIT

1.4.4. (contd)

A power supply unit.

An operational computer.

A monitoring computer.

A fault detection unit.

A discriminating amplifier, which determines whether a 'high' or 'low' effort signal is sent to the actuating unit.

Two power amplifiers.

1.4.5. Operation.

The principle of operation is as follows:-

With aircraft d.c. power ON and Selector to 'AUTO' the normal motor runs continuously and the two magnetic clutch plates are turned in opposite directions. But there is NO SHAFT OUTPUT until the relevant clutch is energised.

With changes of speed and altitude (or Mach No), the differential and static capsules in the capsule unit expand or contract to produce varying pick-off voltages. One Pair of these signals is fed to the operational computer, and the other pair to the monitoring computer.

According to the Mach No. of the aircraft at the time the operational computer passes either a 'Low effort' or a 'high effort' signal to one or other of the two power amplifiers. The amplified signal is then used to energise either of the magnetic clutch solenoids and coupling is completed to produce the required effort movement of the actuator.

The actuator movement is monitored by a slave cam to which is attached a multi-rod potentiometer. The potentiometer cursor position is transmitted to the fault detection circuit in the electronic unit.

This signal is compared in the monitoring computer with the original signal obtained from the capsule unit pick-off.

If the two signals are within a specified tolerance of each other the system continues to function normally.

If the signal is out of tolerance, showing that actuator movement is not correct or that there is a failure elsewhere in the loop, the circuit from the actuator to the fault detection loop is broken and a warning lamp shows the pilot that the system is suspect.

1.4.5. (contd)

A tacho-generator fitted on the actuator feeds back a signal to the discriminating amplifier to stabilise the system.

1.4.6. Indicated Failure Condition.

If the failure warning lamp illuminates, integrity of the system can be established by the following procedure:-

With warning lamp 'ON' and the selector at 'AUTO' the pilot does not know if the normal motor has failed or whether some other fault has developed.

By moving the selector switch to re-set the normal motors serviceability can be assitained. Selecting the switch to RE-SET causes the monitoring system to become de-energised.

If the warning lamp goes out the system may be used again in 'AUTO'

If the lamp remains on, or comes on again, 'Emergency' should be selected. The emergency motor is then supplied via micro switches operating with a slight time interval between them, which allows the actuator rod to be positioned to a point corr-esponding to an average law of force for the system. The 'AJAX' failure warning caption will remain lit.

1.4.7. Tailplane Trim.

Trim of the tailplane control is achieved in the following manner:-

Operation of the trim actuator (G) moves the effort cam neutral position, enabling the control system to be biased without interfering with the stiffness of the controls. The actuator is attached between the aircraft structure and the beam (H) of the Ajax Unit. Retraction or extension of the actuator ram, on selection from the pilot's position, pivots the complete assembly around axis (O), this moving the cam lever arm and biasing the control system.

A potentiometer attached to the frame of the Ajax unit provides the pilot with pitch trim indication.

CHAPTER. 6.

YAW/RUDDER CONTROLS.

CONTENTS.

1. YAW CONTROLS.
1.1. INTRODUCTION.
1.2. DESCRIPTION & OPERATION.
1.3. RUDDER PEDALS.
1.3.1. RUDDER PEDAL ADJUSTMENT.
1.4. SPRING FEEL.

2. RUDDER.
2.1. INTRODUCTION.
2.2. CONTROLS & INDICATION.
2.3. DESCRIPTION.
2.4. OPERATION HIGH SENSE.
2.4.1. OPERATION LOW SENSE.
2.4.2. GEAR CHANGE SELECTION.

3. TWO STAGE GEARING ACTUATOR.
3.1. DESCRIPTION & OPERATION.
3.1.1. MAX SPIN RECOVERY.

4. SPINE BENDING.
4.1. DESCRIPTION.
4.2. OPERATION.
4.3. RUDDER TEST SWITCH.
4.4. FAILURE CAPTION.

5. YAW TRIM.
5.1. INTRODUCTION.
5.2. OPERATION.
5.3. RANGE OF MOVEMENT.

CHAPTER. 6.

ILLUSTRATIONS.

FIG.1.	YAW CONTROL SYSTEM. G.A.
FIG.2.	YAW CONTROL SYSTEM SCHEMATIC.
FIG.3.	TWO STAGE GEARING ASSEMBLY.
FIG.4.	RUDDER CONTROL SWITCH & INDICATIONS.
FIG.5.	RUDDER CONTROL CAM SCHEMATIC.
FIG.6.	TWO STAGE GEARING ELECTRICAL DIAGRAM.
FIG.7.	SPINE BENDING ASSEMBLY.
FIG.8.	SPINE BENDING ELECTRICAL DIAGRAM.
FIG.9.	YAW TRIM ELECTRICAL DIAGRAM.

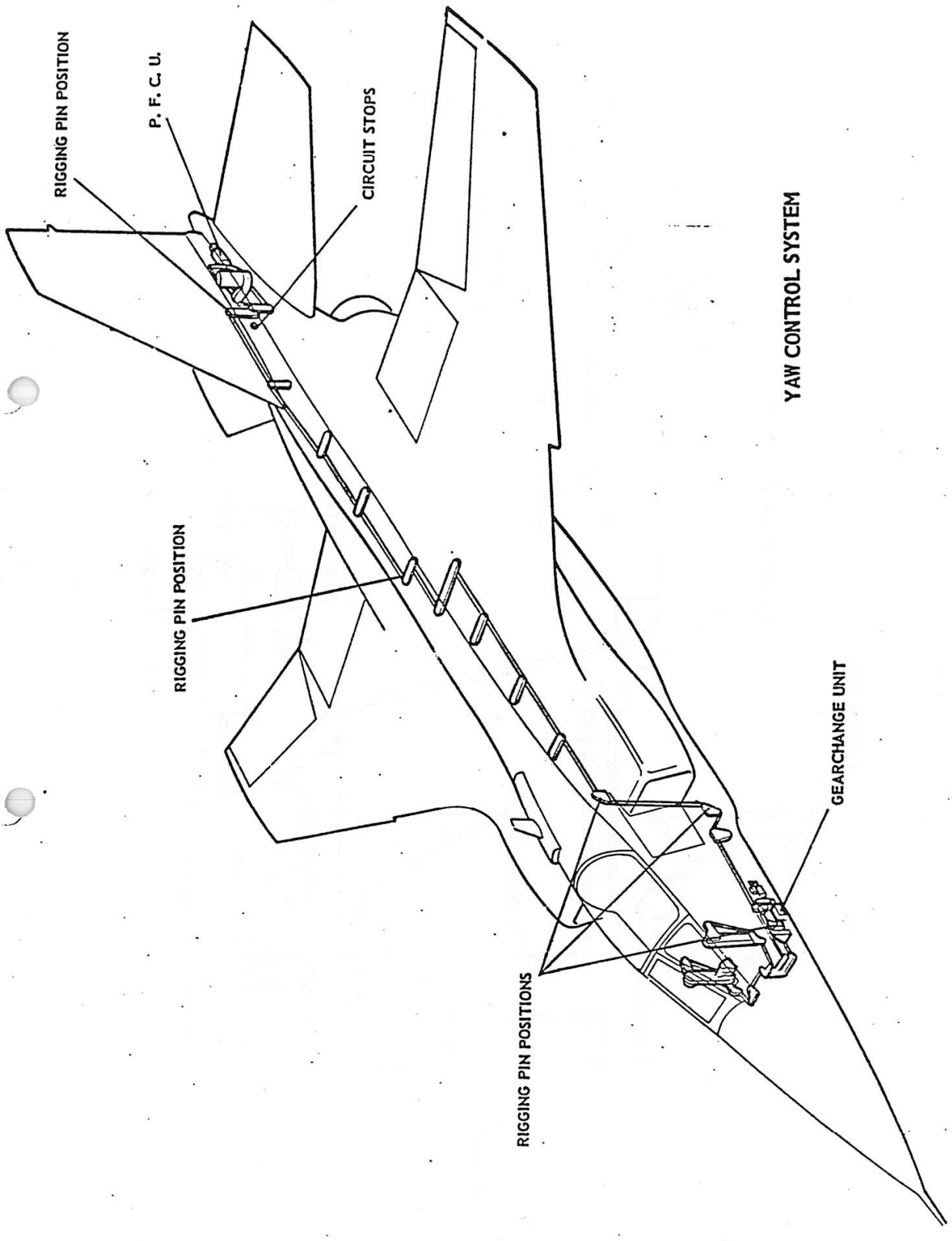

FIG.1 YAW CONTROL SYSTEM

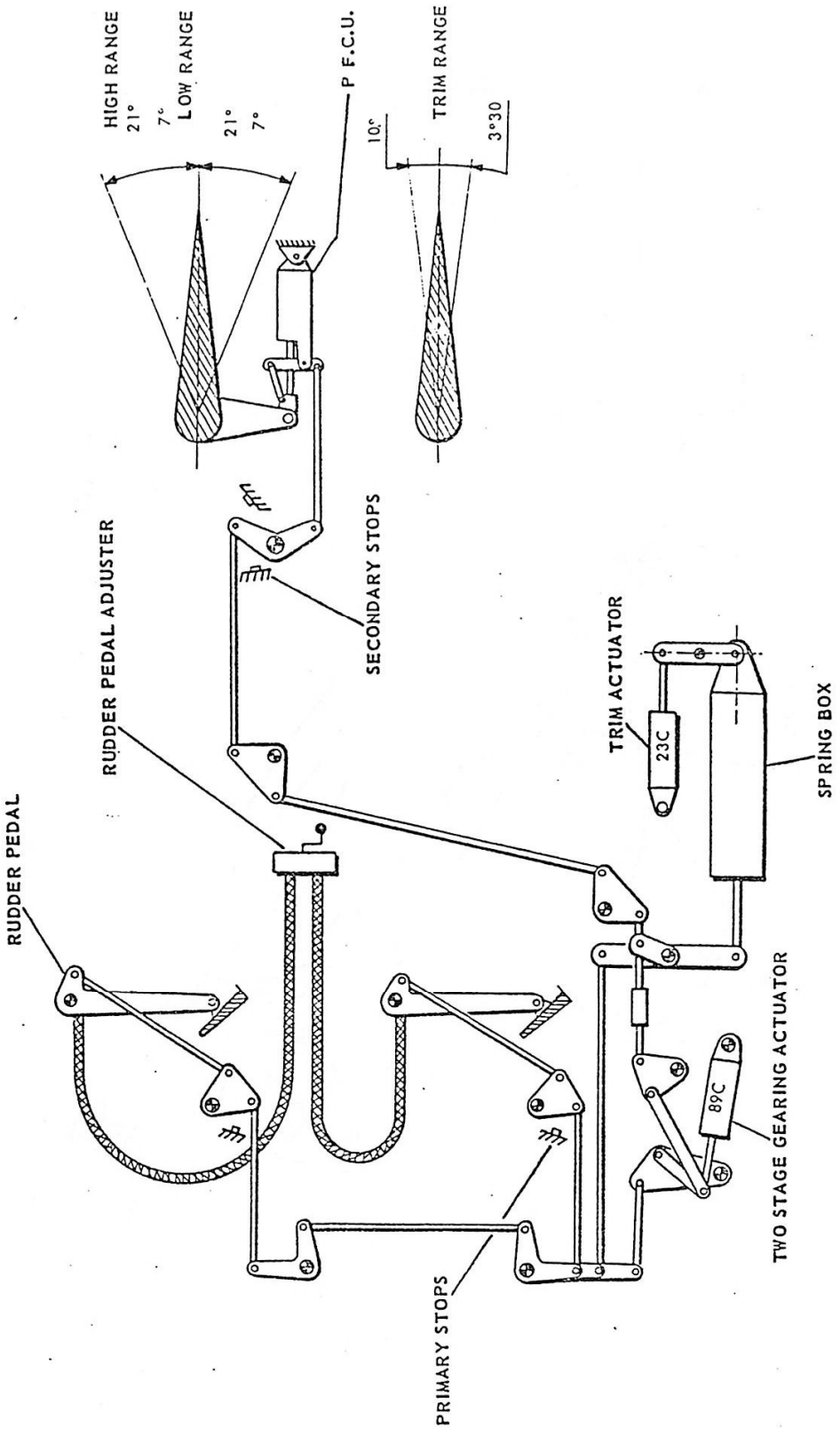

FIG. 2 YAW CONTROL SYSTEM SCHEMATIC

1. YAW CONTROL.

1.1. Introduction.

Directional or Yaw control is achieved by the rudder.

Pilot control is through the rudder pedals, which transmit the signal via push-pull control rods to the rudder P.F.C.U. The P.F.C.U. is located in the fuselage directly beneath the rudder, and operates the rudder control arm, which is attached to the lower hinge pintle.

Spring feel and 'Yaw' trim facilities are connected into the control run.

1.2. Description of Operation.

Rudder pedal movement is transmitted through a lever and push rod assembly, out of the cockpit into the unpressurised zone on the port side of the fuselage. Here it is connected to the two stage, 3.1. ratio gearing (Post MOD 234) and further connected to the spring feel and Yaw trim actuator assembly which is interposed on the control run on its way rearwards.

The control run continues along the port side of the spine to approximately half-way along the centre fuselage where it changes direction, via a lever, to the starboard side of the spine. It now continues along the starboard side of the spine until it connects to the combined pivot shaft, in the Watts linkage of the differential tailplane and rudder, and onto the P.F.C.U. input linkage.

The P.F.C.U. is capable of giving a rudder range of movement of 21°, maximum, either side of neutral providing the undercarriage is not locked up.

1.3. Rudder Pedals.

The rudder pedals consists of symmetrical half-set assemblies, one attached to the port structural longeron of the cockpit, the other to the starboard longeron.

Each pedal consists of:-

A pivoted arm.

A pedal.

An adjuster unit.

A connector rod to the control run.

A system of rods and bellcranks for brake control.

The pivoted arm rotates about its top and on two bearings.

The pedal has a heel support and an anti-skid covering, and is

1.3. (contd).

pivoted on a cantilevered spindle which is attached to the lower end of the arm.

The pivot arm/pedal assembly is connected to the control run via a screwjack adjuster unit which governs their relative position.

The assembly of rods and bellcranks that comprise the brake control, together with the rudder pedals, forms a parallelogram which maintains the pedal position roughly parallel throughout its travel.

1.3.1. Rudder Pedal Adjustment.

The combined operations of the port and starboard adjuster unit allows adjustment of the pedals to suit the pilot. This consists of flexible drives, driven by a handle located on the control pedestal.

Facilities are available for rigging the adjusters and checking alignment by the use of rigging pins.

The two pedals are connected by a series of rods and bellcranks which pass forward of the panel, at floor level, to link the adjuster units.

The vertical torque shaft carries the control run under the floor, into the unpressurised zone, from where it passes to the centre fuselage.

1.4. Spring Feel.

Spring Feel or Artificial Feel as it is also known, is effected through a spring-loaded cylindrical strut. It is interposed into the control run at the point where the control leaves the pressurized cabin. It ensures a neutral position for the range of movement and gives the pilot a certain amount of artificial feel.

2. RUDDER TWO STAGE GEARING. STARBOARD UNDERCARRIAGE UP LOCK MICRO S/W

2.1. Introduction.

Rudder two stage gearing is provided to:-

Improve precision in manoeuvring flight at high speeds.

Limit loads applied on the rudder surface at high speeds.

Reduce uncontrolled rudder travel at high speeds, when flying in turbulent air conditions.

Two stage gearing is achieved by reducing the amount of output travel compared with input signals, in certain conditions, at the

2.1. (contd).

rate of a 3.1 gearing down ratio. This reduction in travel is obtained by re-positioning pivot points of various levers, in the control run to the rudder P.F.C.U. The method is by using an actuator to alter pivot mechanisms similar to that of the differential tailplane circuit. Its installation introduces two operating sensitivities, HIGH RANGE - used at low forward speeds with the undercarriage locked down with full rudder travel available of approximately 21° either side of neutral. LOW RANGE used at high forward speeds with the undercarriage locked in the retracted position with a reduced range of rudder travel restricted to 7° either side of neutral. In both cases full rudder bar movement is available.

2.2. Controls and Indications.

Rudder gearing is controlled by the Rudder Sensitivity Master switch, situated on the port forward instrument panel, with the circuit operative via the starboard undercarriage UP LOCK micro switch and an actuator with twin reversable motors.

The master switch is a three position switch anotated HIGH - AUTO- LOW and protected by a cover guard - ensuring that the switch pole is held in its AUTO selection, with the flap guard down.

Directly above the master switch is an indicator window which will show one of three captions:-

A large triangle if the system is in HIGH RANGE.

A small triangle if the system is in LOW RANGE.

Cross Hatched - White and Black stripes - if the system is moving from High to Low Range or vice versa.

i.e. intermediate range

With the selector switch set to AUTO the NORMAL reversible motor is in use and the EMERGENCY motor being operated if selected to either HIGH or LOW range sensitivity.

2.3. Description.

The mechanism consists of a scissor Torque linkage which has two scissor arms. One arm to which is secured a cam follower. Attached at one end is a slotted cam link, with its opposite end connected to a second scissor arm and gear change actuator. The second scissor arm is bolted to the cam follower scissor arm and gear change actuator at one end and an operating link at its opposite end. The body of the gear change actuator is attached to the airframe stucture, with its ram eye end connected to the two scissor arms, the assembly being capable of swinging in an arc when movement is transmitted from the rudder pedals.

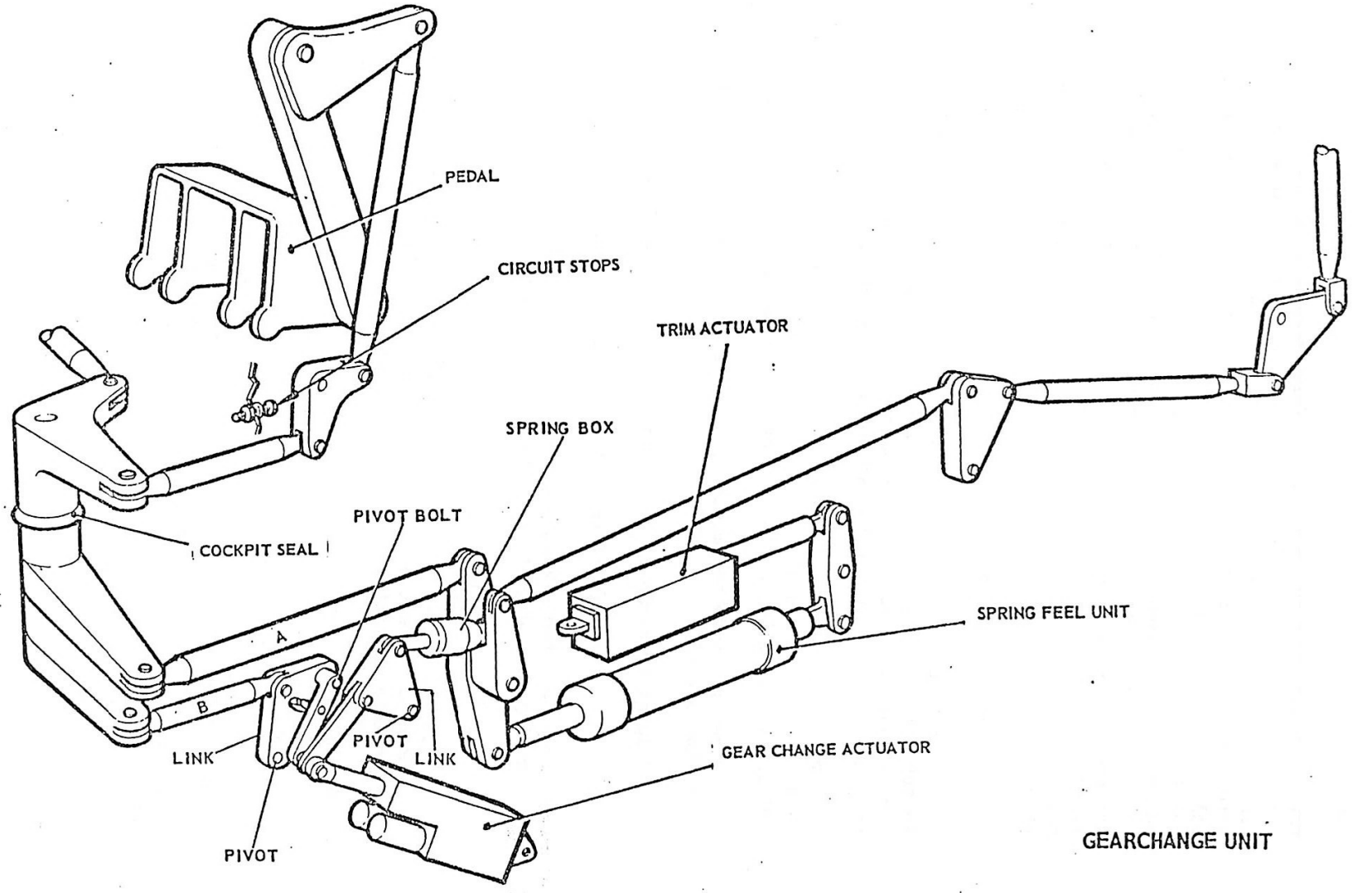

FIG.3 TWO STAGE GEARING ASSY.

YAW TRIM SWITCH AND INDICATOR

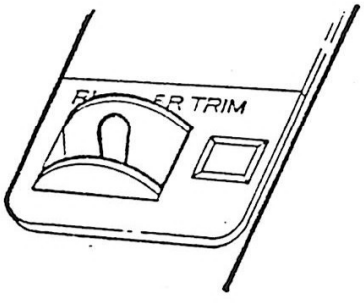

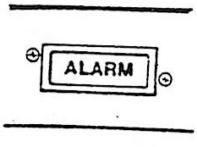

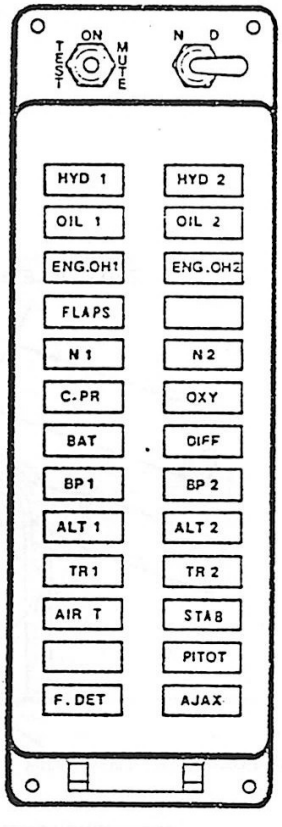

DOLLS EYE INDICATION



PORT RUDDER



NEUTRAL

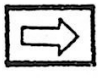

STARBOARD RUDDER

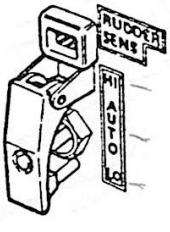

DOLLS EYE TRIM INDICATOR



LOW GEARING



HIGH GEARING



FIG. 4 RUDDER CONTROL SWITCHES AND INDICATIONS

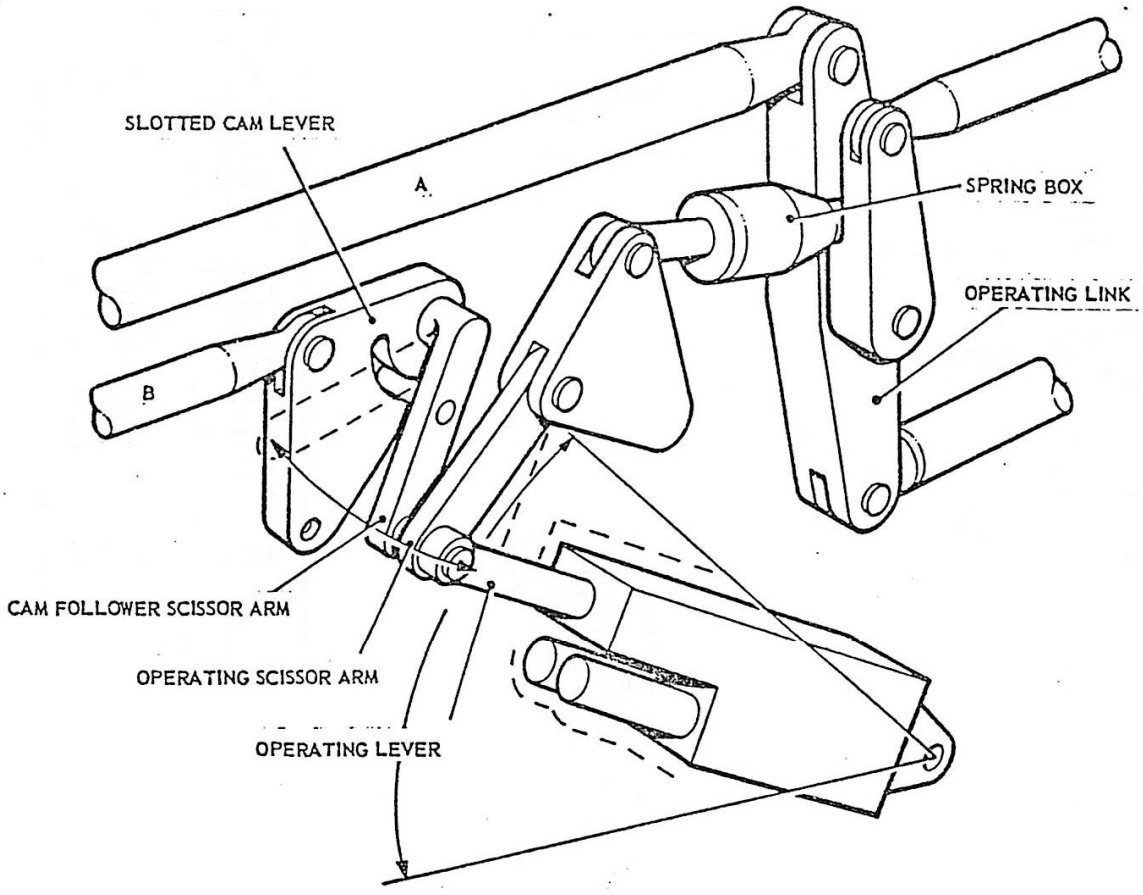

FIG. 5 RUDDER CONTROL CAM SCHEMATIC

2.4. Operation. (HIGH SENSE).

With the rudder two stage gearing operating in the High Range Sensitivity mode the actuator ram will be fully extended. Applying full rudder bar travel will transmit movement through the torque shaft assembly to operating rods A and B of FIG 3.

Rod A. - will move and provide an artificial feel force in the rudder circuit caused by the operating link rotating about its centre pivot point, thus compressing the spring in the spring feel unit.

Rod B. - on moving, will cause the Slotted Cam Lever to rotate about its pivot point. As the slotted cam lever rotates the Cam Follower Scissor Arm, being fixed at the top and centre, will allow the gear change actuator to rock about its bottom pivot point. In rocking, movement will be transmitted via the Operating Scissor Arm, Operating Lever, Spring Box and control rods back to the Rudder P.F.C.U. input lever.

Full range of movement is obtained by the two stage gearing actuator eye-end travelling through the arc set by the radius determined by the actuator overall length.

2.4.1. Operation (LOW SENSE).

With the rudder two stage gearing operating in the Low Range Sensitivity mode the actuator will be fully retracted. Thus the radius of the arc determined by the length of the gear change actuator is considerably less. As the rudder pedals are moved to their full travel the linkage assembly will still move the same, the actuator will still move through the same angle but the actuator eye-end will travel less, the length of its arc being reduced. This decrease in arc travel of approximately 3:1 which gives an output rudder travel movement of 7°

2.4.2. Gear Change Selection.

Selection from High Range Sensitivity to Low Range Sensitivity is automatic providing that the selector switch is set to AUTO and the undercarriage has been selected to its UP position, with the STARBOARD main undercarriage leg locked in the retracted position. The system is made active by electrical power supply passing from its distribution point through the selector switch and relays effected by the Starboard undercarriage UP LOCK micro switch.

The set range of movement for a given configuration of the system can be overriden at any time by selecting HIGH on the selector switch if the system is operating in LOW Range Sensitivity and selecting LOW if the system is operating in the HIGH Range Sensitivity. In the event of system failure in AUTO the system can be brought into its correct range by operating the appropriate switch selection.

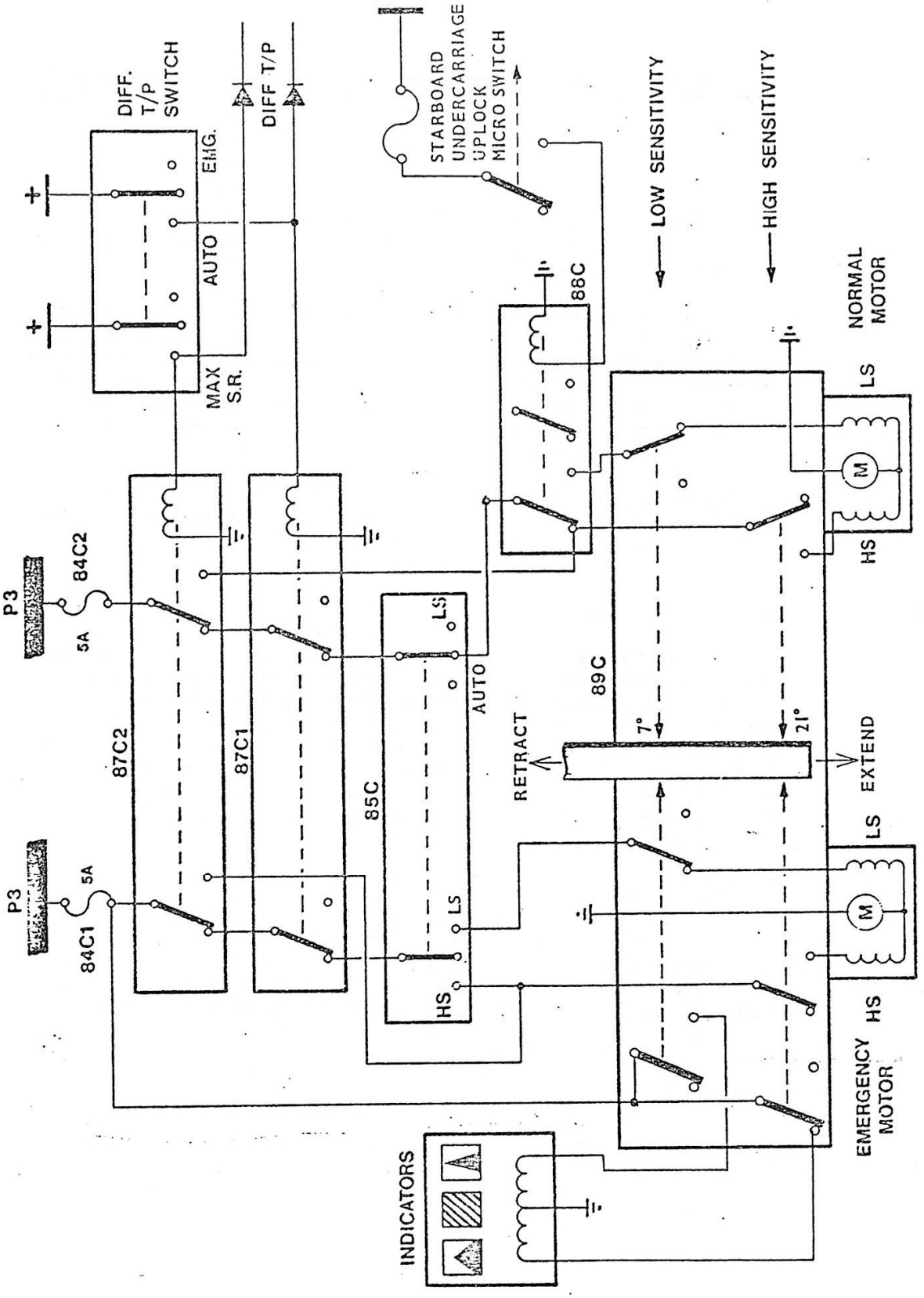

FIG. 6 RUDDER TWO STAGE GEARING

3. TWO STAGE GEARING ACTUATOR.

3.1. Description & Operation.

The two stage gearing actuator is an actuator with twin reversable motors who's full ram travel is pre-set by internal limit switches. The two motors identical in operation are anotated NORMAL and AUXILIARY or EMERGENCY motors, and are operative via the two stage gearing selector switch.

The NORMAL motor will be operative whenever the circuit is set to AUTO and the AUXILIARY motor will be used if the normal motor fails - but switch selection to either High or Low Sensitivity Range must be made.

3.1.1. Max Spin Recovery.

The electrical circuits for tailplane Differential and Rudder Two Stage Gearing are interconnected by the differential tailplane 'Max Spin Recovery' switch. In the event of this switch being selected to 'MAX' an electrical relay is energised to allow contacts to move over which, bye-pass any selection made on the two stage gearing switch, and supplies electrical power to operate both Normal and Auxiliary motors of the two stage gearing actuator to drive the ram to its High Sensing position.

4. SPINE BENDING.

4.1. Description.

Due to aerodynamic forces acting upon the airframe structure about the fuselage in the region of Stations 6061 to 6261, unwanted, rudder movement is caused by structural deflections in the spine. To record and compensate for the amount of spine bending about the laterial axis caused by structural deflections a potentiometer is mounted in the spine who's signals are fed into the Yaw Autostabiliser circuit. The amount of rudder movement per 1 m.m. of spine displacement under a positive loading factor is .23° to STARBOARD as the tendency of the aircraft is to YAW to PORT.

4.2. Operation.

The compensating device to prevent an aircraft yawing to Port, due to structual deflections when pulling positive 'G' is automatic providing that the Yaw Autostabilisation circuit is engaged. Deflections will be sensed by the potentiometer attached to the spine at Station 6061, the amount of fuselage bending transmitted to the Rudder Coupling Unit , which passes information into the Rudder Autostabiliser Computer. Depending on the output signals from the A/Stabiliser Computer depends the degree of travel the Rudder P.F.C.U. and rudder will have to make to canel out any spine movement.

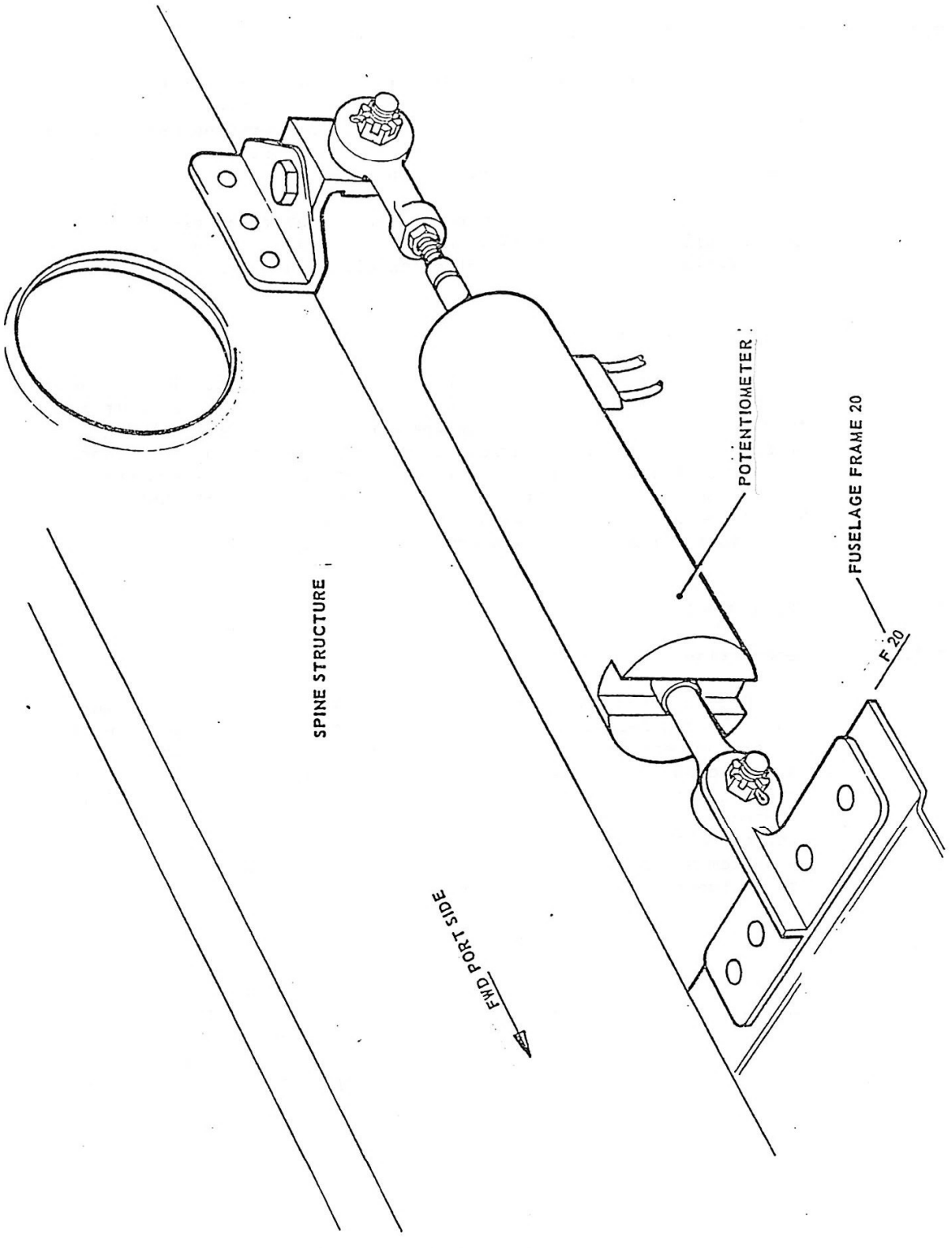

FIG. 7 SPINE BENDING ASSEMBLY

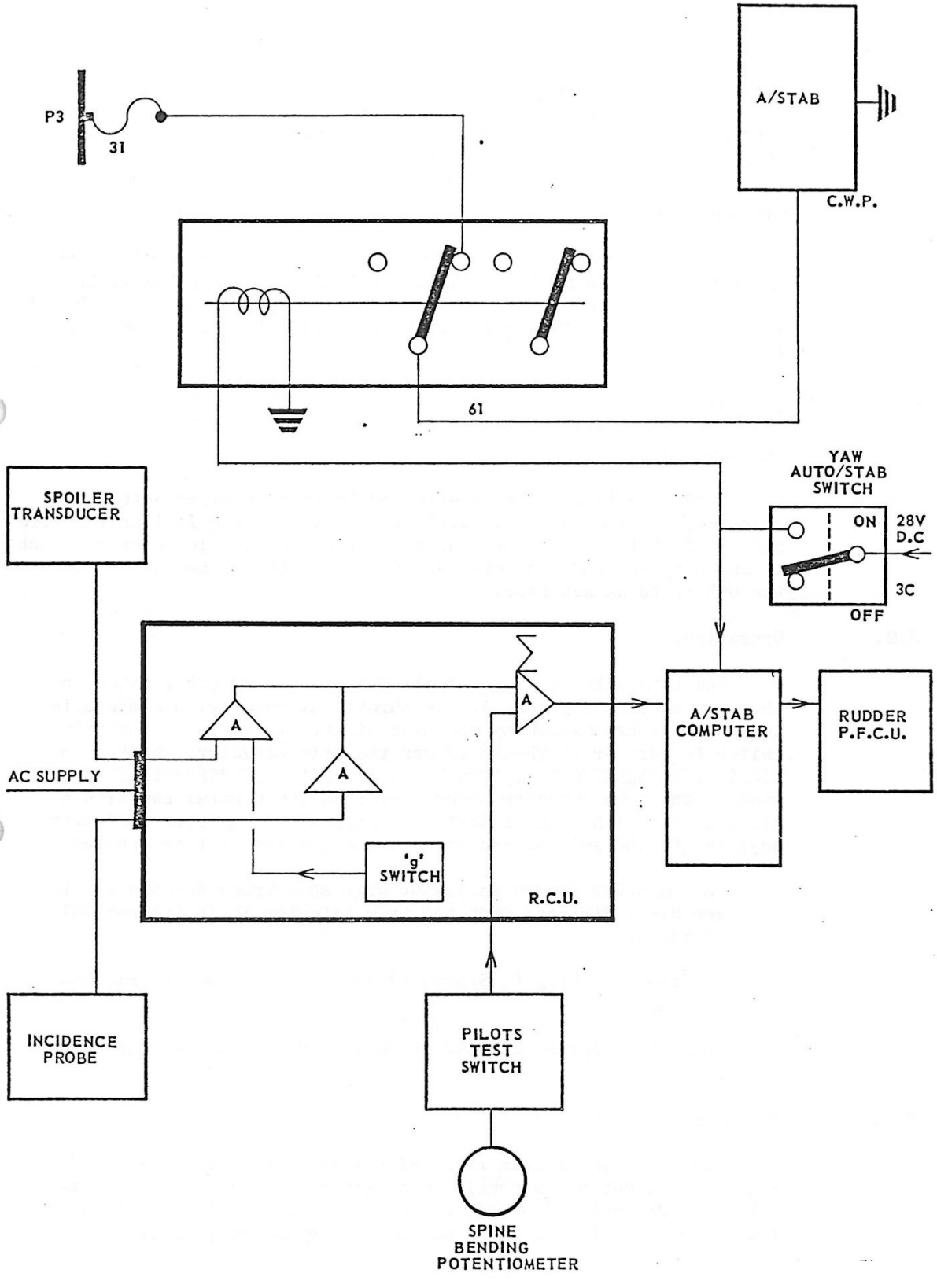

FIG. 8 SPINE BENDING ELECTRICAL DIAGRAM

4.3. Rudder Test Switch.

To enable the integnity of the system to be ascertained a test switch located on the PORT console is installed. The purpose of the switch is to manually select a full autostabiliser demand to the Rudder P.F.C.U. proving all but the potentiometer of the system. The switch is a three position switch spring loaded to its central position and annotated LEFT - RIGHT.

4.4. Failure Caption.

Situated in the electrical circuit of the spine bending compensating system is an 'Autostabiliser 'OFF' Amber warning light, located in the centralised warning panel. It is annotated STAB and its illumination will signify that the Rudder Autostabiliser System is in the 'OFF' position.

5. YAW TRIM.

5.1. Introduction.

Rudder or 'Yaw' trim is effected by an electrical actuator which puts a bias on the control run via the spring feel unit. Trim and Artificial Feel are similar to that of the spoiler controls each having a spring rod connected at one end to the controls and at the other, to an actuator.

5.2. Operation.

The trim actuator is controlled by a trim switch located on the port console adjacent to the throttle levers, with a magnetic indicator square window by the side of it. Movement of the trim switch to port or starboard causes the trim actuator, which is a single reversable motor, to move in the relevant direction. As soon as the trim actuator moves away from its neutral position a micro switch within the actuator energises the magnetic indicator, adjacent to the switch, and shows the direction of trim applied.

The magnetic window indicator will show Cross Hatched (White and Black Stripes) when the trim actuator is in its neutral position.

An Arrow Pointing to Starboard if starboard rudder trim has been applied.

An Arrow Pointing to PORT if port rudder trim has been applied.

5.3. Range of Movement.

The full rudder trim range of movement is between 9° - 10° which is pre-set by internal limit switches within the trim actuator and directly dependant on actuator ram travel. But because the rudder circuit has a two stage gearing assembly installed

5.3. (contd).

within its control run, rudder trim range of movement will have two different settings High and Low Range. These dimension travels being:-

HIGH RANGE	- 9° 30'	±	30'
LOW RANGE	- 3° 30'	±	30'

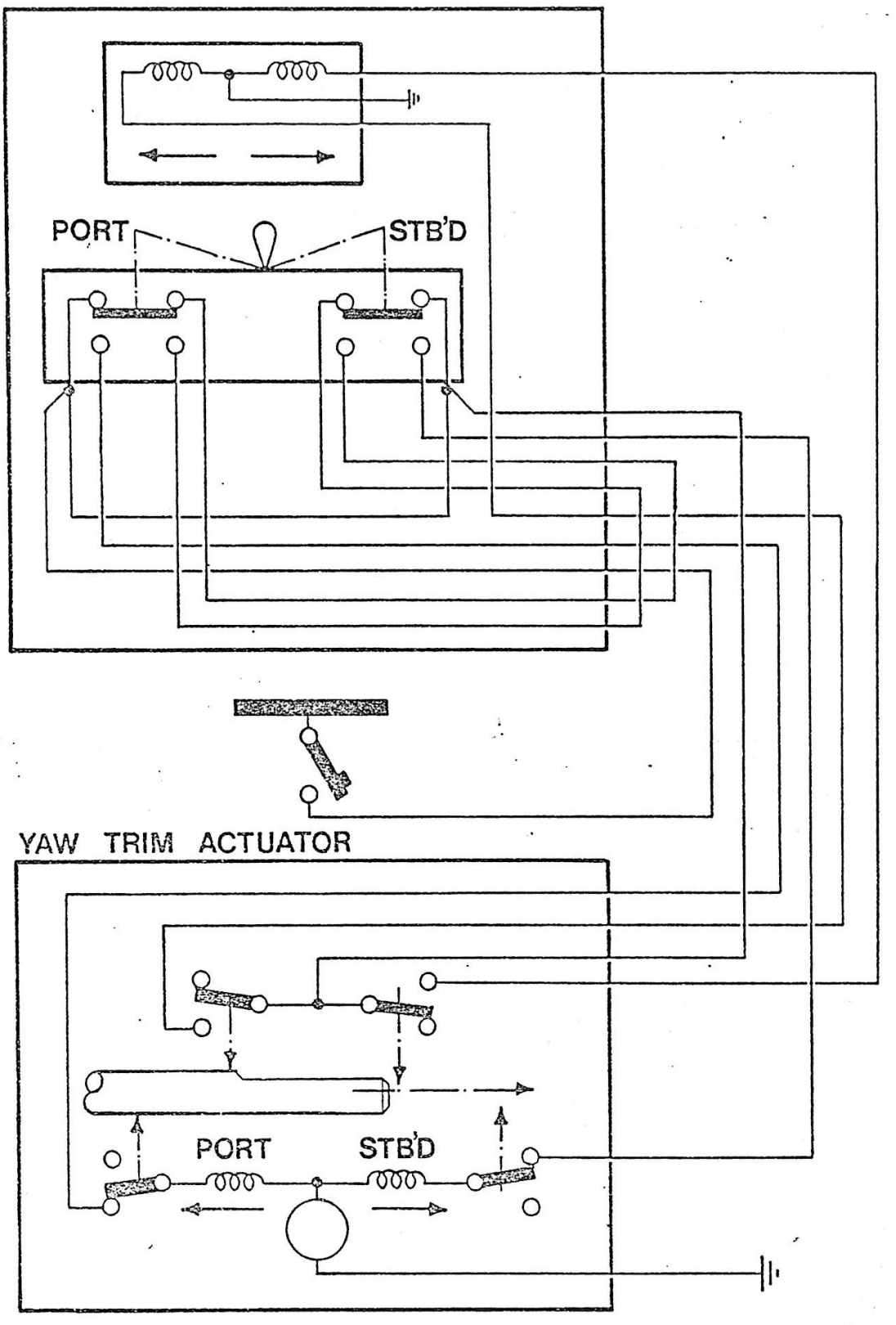

FIG. 9 YAW TRIM ELECTRICAL DIAGRAM

CHAPTER 4.

CANOPY/CANOPY RELEASE AND ESCAPE MECHANISMS.

CHAPTER 4.

CANOPY/CANOPY RELEASE AND ESCAPE MECHANISMS.

CONTENTS.

1. INTRODUCTION.
2. DESCRIPTION AND OPERATION.
2.1. CANOPY.
2.2. CANOPY OPERATING MECHANISM.

3. CANOPY OPERATION.
3.1. MANUAL INTERNAL.
3.1.1. CLOSING THE CANOPY.
3.1.2. LOCKING THE CANOPY CLOSED.
3.1.3. OPENING THE CANOPY.

3.2. MANUAL EXTERNAL OPENING.
3.3. EMERGENCY CANOPY OPENING.
3.3.1. INTERNAL CANOPY JETTISON.
3.3.2. EXTERNAL CANOPY JETTISON.
3.3.3. AUTOMATIC CANOPY JETTISON.

4. GUIDE TO AIRCREW RESCUE PROCEDURE.
4.1. WITH NO IMMINENT DANGER.
4.2. WITH IMMINENT DANGER.

ILLUSTRATIONS.

FIG.1. CANOPY.
FIG.2. CANOPY LOCKING MECHANISM DETAIL.
FIG.3. CANOPY LOCKING MECHANISM.
FIG.4. CANOPY JETTISON.
FIG.5. CANOPY STRUT POSITIONING OPERATING LINKAGE.
FIG.6. CANOPY STRUT UPPER ATTACHMENT.

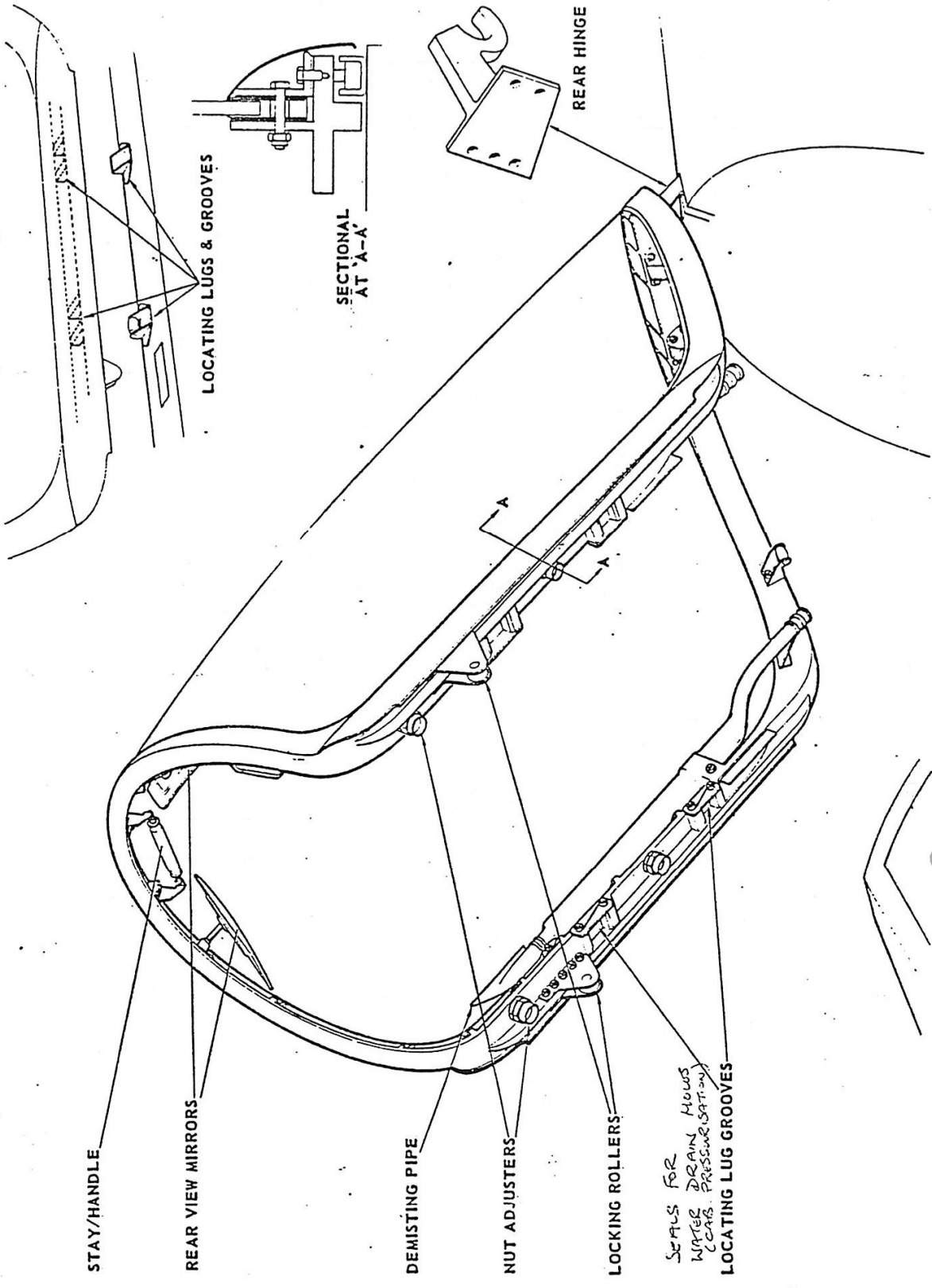
LOCATING LUGS & GROOVES
SECTIONAL AT 'A-A'
REAR HINGE
A
A
STAY/HANDLE
REAR VIEW MIRRORS
DEMISTING PIPE
NUT ADJUSTERS
LOCKING ROLLERS
SEALS FOR WATER DRAIN HOLES (CAR PRESSURISATION)
LOCATING LUG GROOVES

FIG.1 CANOPY

CHAPTER 4.

CANOPY/CANOPY RELEASE AND ESCAPE MECHANISM.

1. INTRODUCTION.

The canopy is constructed of a moulded transparency mounted in a magnesium alloy frame. The complete assembly articulates at two hinge points attached to the top of Frame 9, and is opened and closed manually.

The canopy is weight compensated by rubber bungee's attached to the canopy operating mechanism and aircraft structure. The locking and unlocking of the canopy to the fuselage, is by a lever, either inside the cockpit starboard side, or externally by a lever on the port side of the fuselage. The canopy is automatically locked when fully opened.

Facilities are available to partially open the canopy by inserting a tie rod between the canopy and a spigot on the forward windscreen arch. The tie rod is part of the canopy opening and closing handle.

In the event of an emergency the canopy can be jettisoned with the aid of explosive cartridges operated by either internal or external operating handles.

2. DESCRIPTION.

2.1. Canopy.

The transparency is made of OROGLAS and has an edge of TERGAL LAMINATE. It is secured to a magnesium alloy frame by bolts which pass through rubber blocks in the transparency. Sealing between the transparency and frame is by various sealing compounds. The edges are covered by either Fairings, or cover strips at the front and rear.

The canopy is attached to the fuselage by two open ended hinge fittings, and two fork ends which are secured to compensating rods by Pip Pins.

The canopy is located on the fuselage when closed, by a series of side stops, two each side, and two rear rollers. There are also two adjustable vertical stops, each provided with a rubber buffer fitted under the Port and Starboard side frames.

Two locking rollers, fitted aft of the adjustable vertical stops, engage with slip hooks attached to the fuselage, when the canopy locking lever and mechanism is selected to a LOCKED position.

The sealing between the canopy and fuselage is by a rubber seal secured to the fuselage and automatically inflated with air when the canopy is closed and locked, providing air is available.

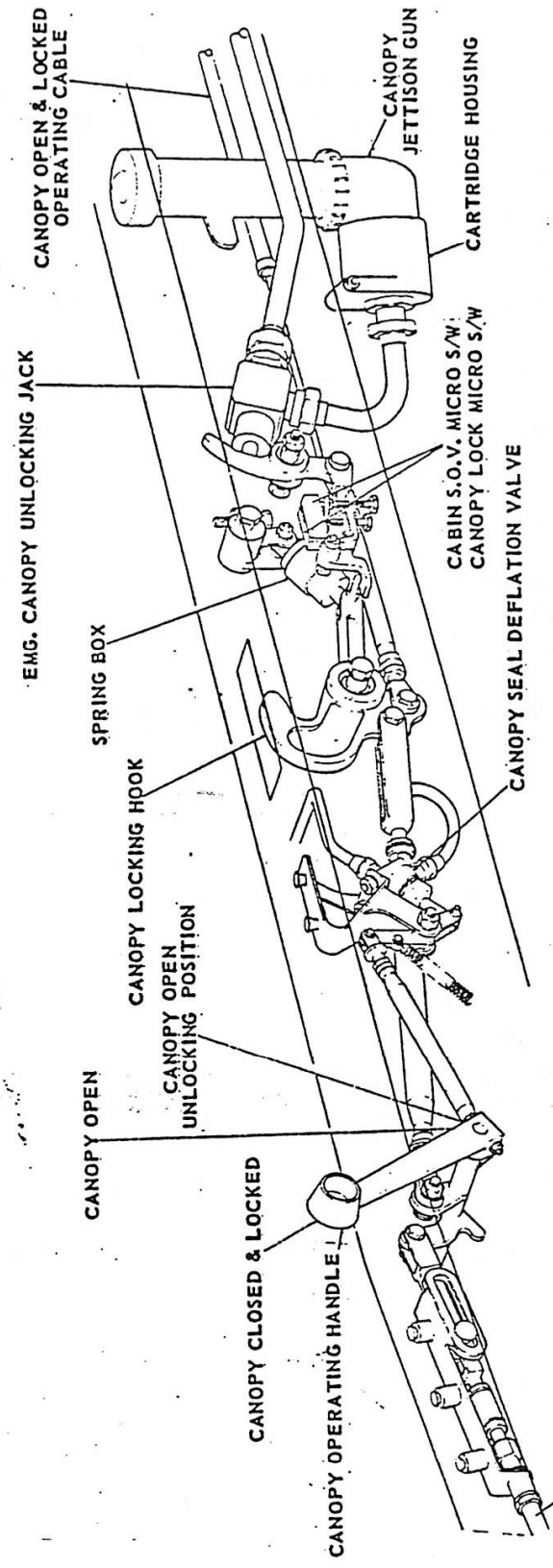

FIG.2 CANOPY LOCKING MECHANISM (DETAIL)

2.2. Canopy Operating Mechanism.

The mechanism to lock or unlock the canopy when closed is duplicated and fitted in the longitudinal box structure each side of the cockpit. It is synchronised by a teleflex cable assembly routed around the front of the cockpit.

It consists of a hook connected by a lever to a spring box which maintains the hook in its locked or unlocked position according to the over centre position of the lever.

A rod connects the hook to an operating lever on the starboard side of the cockpit and to an external lever on the port side below the canopy. Operation of one lever will result in movement of the opposite lever

Attached to the internal lever on the starboard side of the cockpit is an additional rod to a canopy seal inflation/deflation valve. The valve is operated to inflate the canopy seal when the lever is operated from its vertical, to fully forward position which is the "canopy locked closed position", and deflates the seal when the lever is pulled back to the "canopy unlocked position"

The mechanism to lock/unlock the canopy in the open position, consists of two spring loaded hooks fitted to a layshaft secured to the sloping bulkhead Frame 9. A lever secured to the layshaft and connected by rods through two levers, is operated by a cable assembly connected to the unlocking lever at the spring box. Two compensating rods are attached to the canopy at the top and bottom by two levers on an operating shaft attached to the bulkhead. Two levers fixed to the operating shaft will rotate and engage with the locking hooks when the canopy is open.

3. CANOPY OPERATION.

Manual Internal.

Manual External.

Emergency Internal Jettison.

Emergency External Jettison.

Automatic Emergency Jettison - Seat Ejection.

3.1. Manual Internal.

The canopy mechanism is operated by a three positioned lever fitted on the starboard side of the cockpit. When the lever is vertical the mechanism is in an unlocked position and when the lever is fully FORWARD the mechanism is in a LOCKED CLOSED position.

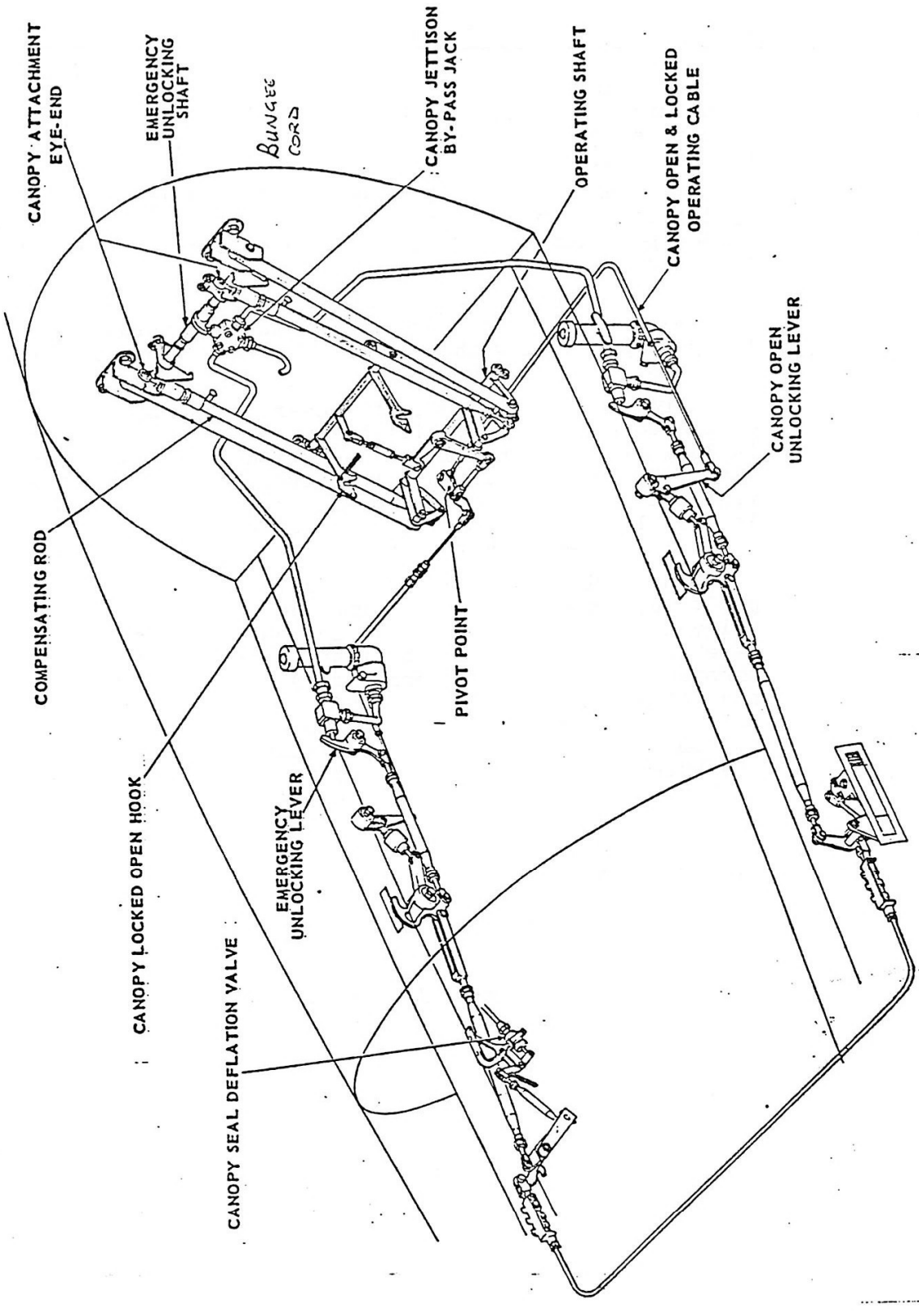

FIG.3 G.A. CANOPY LOCKING MECHANISM

3.1.1. Closing the Canopy.

On selecting canopy closed the canopy should be supported by hand. Pulling the lever from the vertical position, aft approx 12°, movement of rods will rotate hooks further forward resulting in the piston of the spring box pulling to unlock the locked OPEN hook levers. The cable will now operate two levers to disengage the locking hooks and allow the canopy to become unlocked from the locked open position.

The operating lever when released will spring forward to the vertical position due to the spring box. The locking hooks will then move back to their locked position.

3.1.2. Locking the Canopy Closed.

With the canopy closed, pushing the lever forward will pull rods which rotate hooks to engage with the locking rollers on the canopy. The spring box will pivot to its opposite over centre position to maintain the lever in the locked position. It will also operate a micro switch rocker arm to give an indication of a canopy locked position. A second rod from the operating handle when pushed forward will operate the seal inflation valve.

3.1.3. Opening the Canopy.

Pulling the lever aft to the vertical position will operate the seal inflation valve to deflate the Canopy seal. The locking hooks will rotate to disengage from the canopy locking rollers. The spring box will move to its opposite over centre position maintaining the hooks disengaged. The micro switch rocker arm will pivot and the micro switches will indicate unlocked.

The canopy will rise slightly and is then pushed fully open by hand. The compensating rods will rotate the operating shaft moving the levers to engage with the locking hooks maintaining the canopy locked open position.

Indication of the canopy being unlocked is indicated by a RED light caption CPR illuminating on the Failure Warning Panel. The light will not extinguish until both micro switches situated under the Port and Starboard side of the cabin structure are depressed. Both micro switches wired in series, are depressed by the canopy slip hooks making contact with a floating lever when in the fully locked position.

3.2. Manual External Opening.

The canopy locking/unlocking mechanism can also be operated by an external handle located on the Port side of the fuselage between Frames 8 and 9 (Stations 1856 and

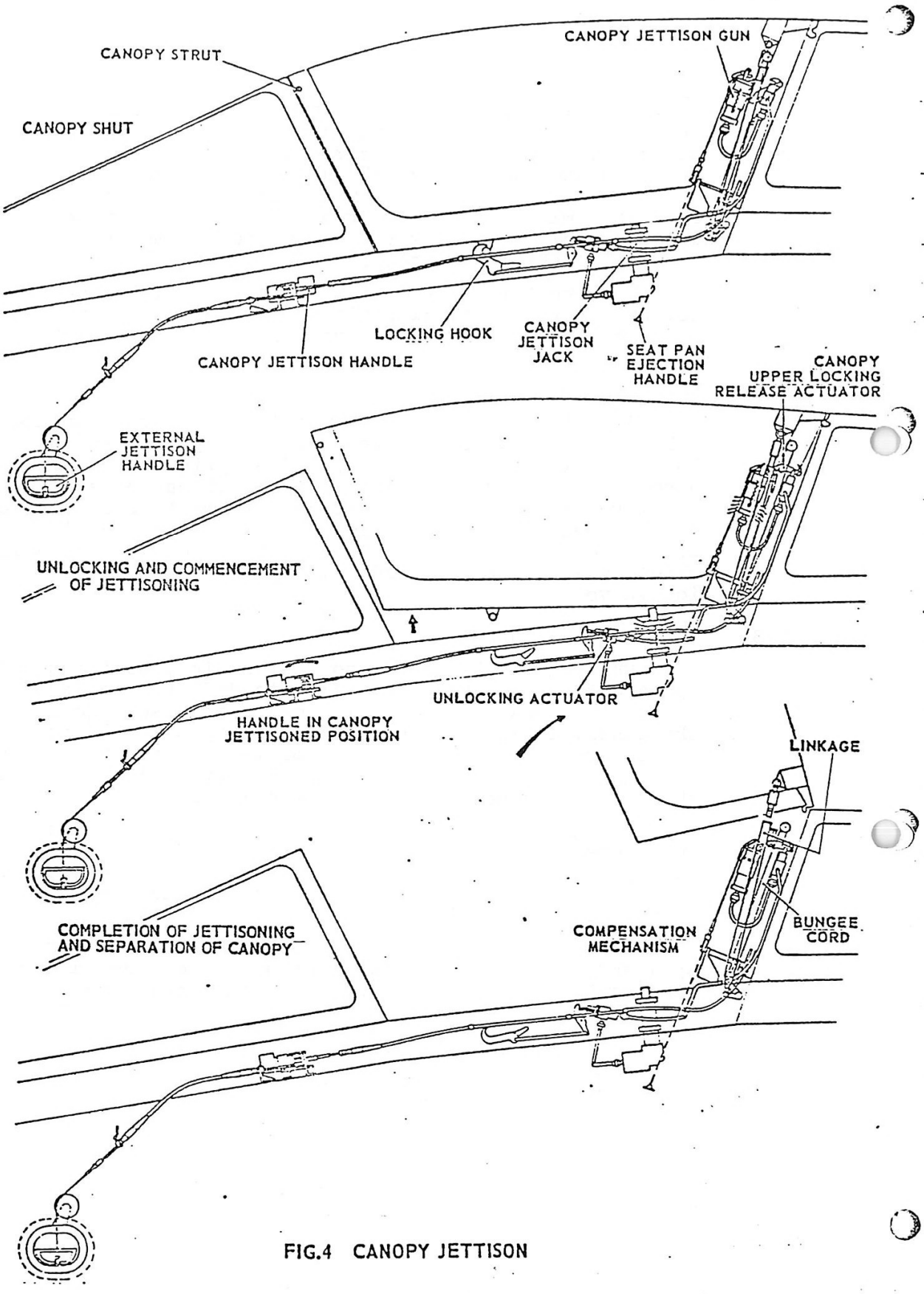

FIG.4 CANOPY JETTISON

3.2. (contd).

3300). This handle is directly linked to the internal operating handle layshaft. Movement of the external handle actuates the same system of operating rods and levers to unlock the canopy locking mechanism when in the LOCKED CLOSED or LOCKED OPEN position.

Movement of the external operating handle will at the same time move the internal canopy handle in the direction applied. When the canopy locking hooks are in a LOCKED CLOSED POSITION the external operating handle fits flush with the fuselage side skin.

3.3. Emergency Canopy Opening.

In all cases of opening the canopy by emergency methods, explosive cartridges are ignited to physically jettison the canopy.

The canopy is jettisoned by selecting either:-

Internal Canopy Jettison Handle.

External Canopy Jettison Handle, Port and Starboard sides of the aircraft.

Seat Pan Ejection Seat Firing Handle.

3.3.1. Internal Canopy Jettison.

Internal Canopy Jettison is initiated by pulling the internal canopy jettison handle out of its recess in the port side wall of the cockpit, and pushing it forward. The jettison handle is wire locked with thin copper locking wire .0118" or .3 mm this handle is suitably marked with conventional emergency colour coding BLACK/ YELLOW stripes.

Operation of the canopy jettison handle withdraws the canopy firing unit sear to ignite an explosive cartridge; the expanding gases are piped to a by-pass jack who's piston is forced upwards, rotating a cross-shaft to position two strut unlocking levers into their jettison position. From the by-pass jack expanding gases flow to the PORT and STARBOARD canopy unlocking jacks. The unlocking jack rams are forced forward and via linkages release the canopy locking hooks. As the canopy becomes unlocked, the unlocking jacks acts as sequence valves to direct gases to the Port and Starboard Jettison Jack firing pins, activating both cartridges. The jettison jack rams extend, which forces the canopy upwards.

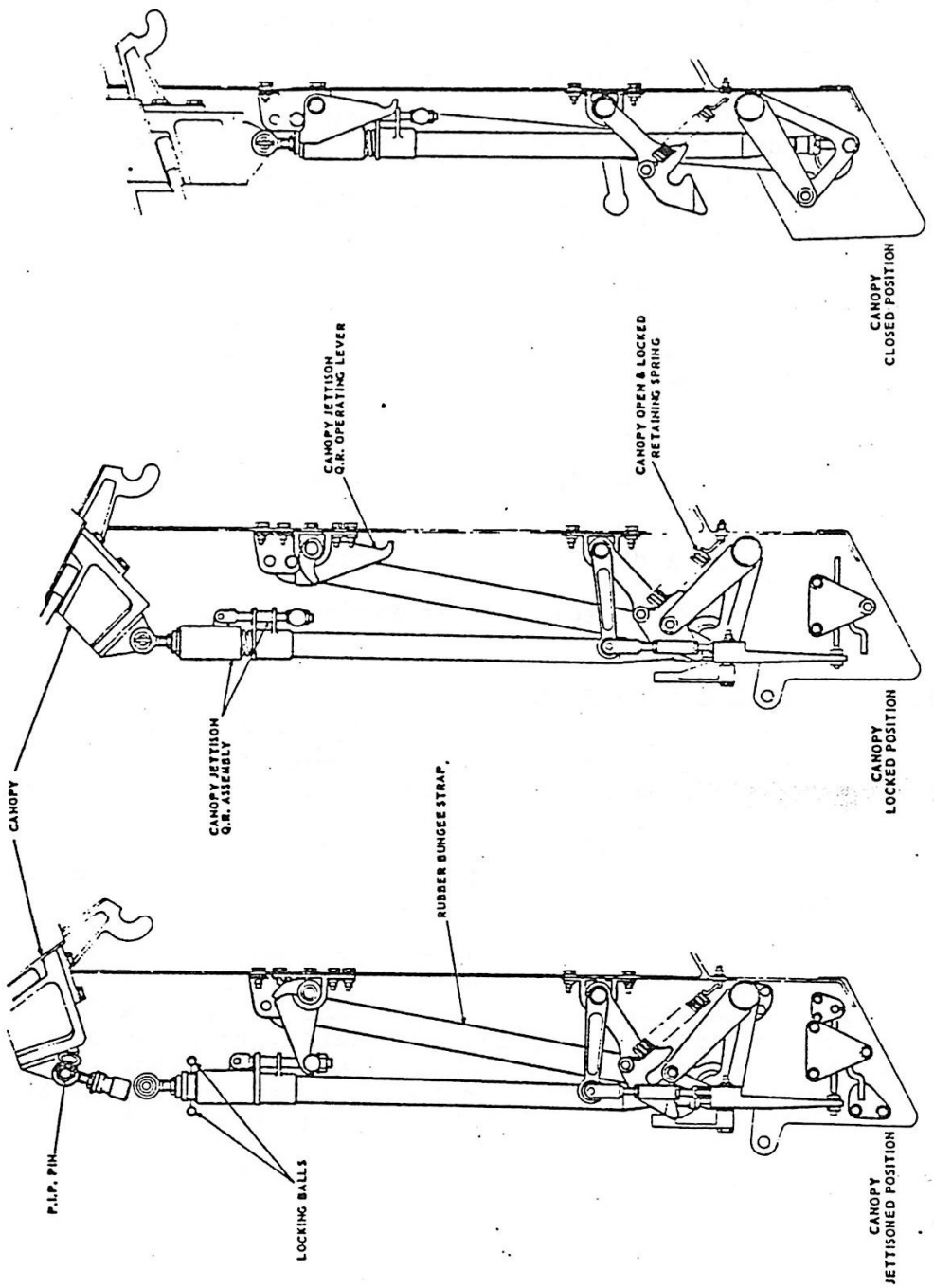

FIG.5 CANOPY STRUT POSITIONS

3.3.1. (contd).

As the canopy rises, both canopy strut upper attachment locking sleeves are retained by their strut retaining links and levers. With the locking sleeves retained, further movement upwards of the canopy and canopy struts compress the locking sleeves against their springs, which releases the sleeve locking balls. This action allows the canopy upper attachments to separate from the canopy strut with further upward movement. More movement of the canopy upwards will allow it to become detached from the aircraft structure due to the hinges being open ended.

3.3.2 External Canopy Jettison.

The external canopy jettison methods are initiated by either of the two operating handles, located in stowages on the Port and Starboard sides of the windscreen arch forward of Frame.7. Each stowage being sealed by a transparent breakable window.

The handles are painted BLACK/YELLOW emergency coding, and a broad yellow arrow bearing the inscription RESCUE is painted on the fuselage skin immediately forward of each handle stowage. Above each stowage is annotated:-

EMERGENCY CANOPY RELEASE.

and below each stowage is annotated:-

BREAK PANEL PULL RING.

Each Jettison handle is attached to a Bowden type cable which is connected to the internal jettison mechanism. To enable the external canopy jettison handles to be operated, the transparent window must be broken, the handles unclipped and pulled outboard.

3.3.3. Automatic Canopy Jettison.

Is initiated by pulling the seat pan firing handle. This action withdraws a sear from the seat firing unit to detonate a cartridge. The expanding gas is piped via the harness retraction unit to a sear withdrawal plunger which operates mechanism to withdraw the sears from the jettison gun and Time Delay Unit. The jettison gun will fire immediately; the same sequence of operation as for normal jettison then follows.

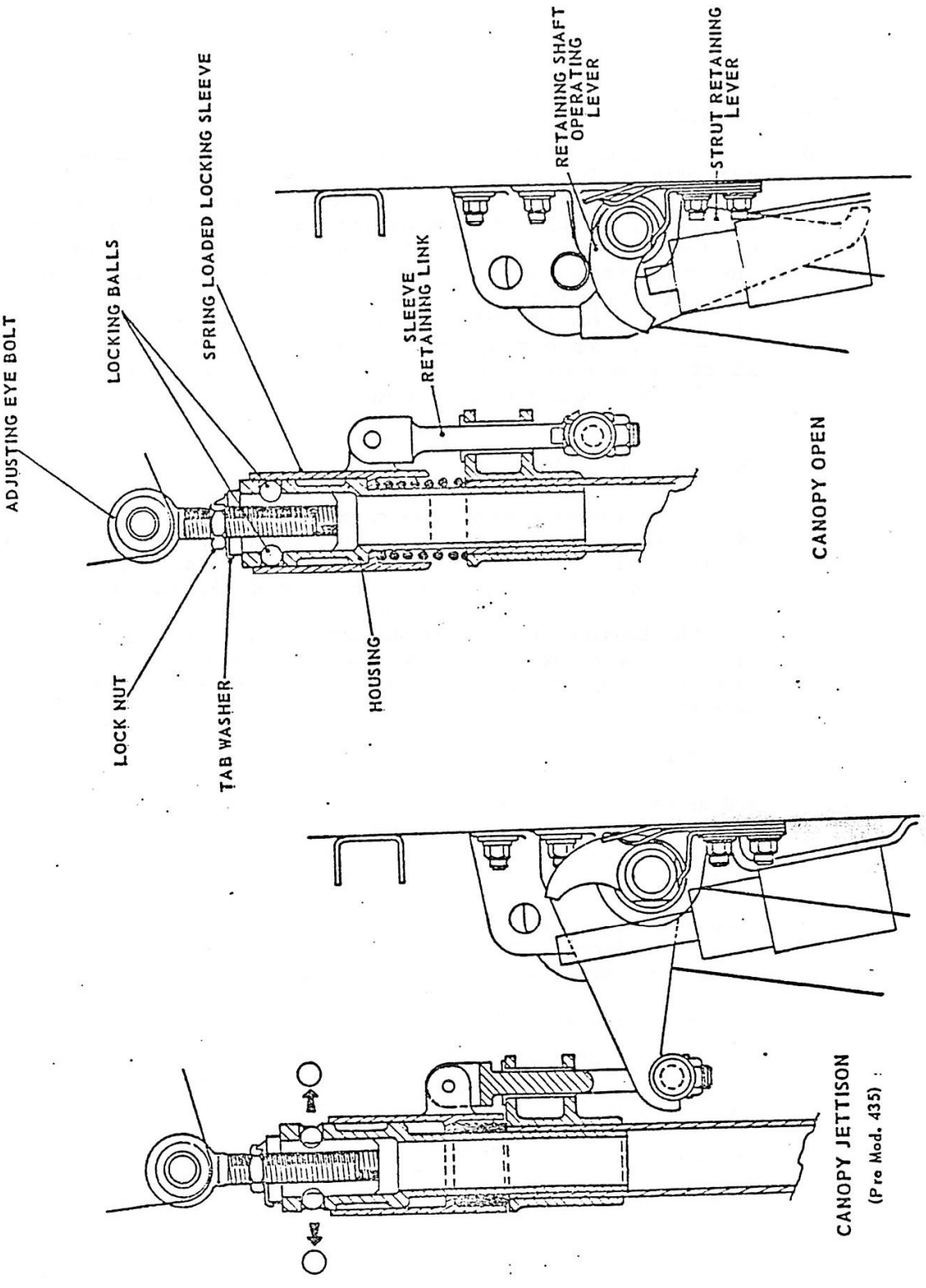

FIG.6
CANOPY STRUTS UPPER ATTACHMENT

4. GUIDE TO AIRCREW RESCUE PROCEDURE.

4.1. No Imminent Danger.

Providing there is NO POSSIBILITY of:-

FIRE.

EXPLOSION.

PLENTY OF TIME IS AVAILABLE.

AIRCRAFT IS NOT EXTENSIVELY DAMAGE.

Approach the aircraft from the PORT SIDE at the same time arrange for a second person to approach and position himself in an identical position on the STARBOARD SIDE of the aircraft.

Locate the CANOPY EXTERNAL OPERATING LEVER - Approximate Position - Just under the side Windscreen at Frame 8.

Depress the REAR of the CANOPY EXTERNAL OPERATING LEVER (position noted by serrations on the lever) and PULL REARWARDS at the same time applying a slight weight pressure on the top of the canopy, until the canopy locks disengage.

Raise the CANOPY by hand to the FULLY OPEN and LOCKED OPEN POSITION.

INSERT the Ejection Seat MAIN GUN SAFETY PIN. (PRIMARY CARTRIDGE SEAR). (If person in distress, remove oxygen mask first).

Then if time permits insert remaining Safety Pins.

Canopy Jettison.	-	Rear of Seat.
Rocket Pack.	-	Starboard side of seat Uppermost.
Seat Pan.		Centre of Seat Pan.
Manual Separation.		Port Side of seat by Thigh Guards.

Remove the CANOPY by PULLING DOWN the TWO Canopy Attachment Spring Loaded Quick Release Assemblies on the TOP of the COMPENSATING RODS. Hinge the Canopy further REARWARDS until it becomes detached from the fuselage structure and place the canopy in a safe position.

Rotate the TORSO HARNESS quick release fitting through 90° to release the LAP and NEGATIVE 'G' STRAPS.

Release the two Leg RESTRAINING CORDS by operating the Leg Restraining Cord Release Lever.

4.1. (contd)

Disconnect the P.S.P. lower line connector.

Release MAN PORTION of the CREW P.E.C. from the SEAT.

Release TORSO HARNESS from Seat by OPERATING SEAT KOCH fittings.

Remove Aircrew from Cockpit.

4.2. Imminent Danger.

With imminent danger of:-

FIRE.

EXPLOSION.

MINIMUM TIME AVAILABLE.

A DAMAGED AIRCRAFT.

Approach the aircraft from either the PORT OR STARBOARD SIDE.

Ensure ALL PERSONNEL are FORWARD of the CANOPY.

BREAK either the PORT or STARBOARD CANOPY JETTISON EMERGENCY PANEL.

PULL the Canopy Jettison Release Cable and Jettison the CANOPY.

INSERT the Ejection Seat MAIN GUN SAFETY PIN. (PRIMARY CARTRIDGE SEAR) (If person in distress, remove oxygen mask first).

and if time permits insert:-

Rocket Pack Safety Pin.

Seat Pan Safety Pin.

Pull the SEAT MANUAL SEPARATION HANDLE (PORT SIDE of the SEAT by the THIGH GUARD).

Disconnect Pilot's TORSO HARNESS. Top of the SEAT.

Remove Aircrew from Cockpit.

NOTE:

SAFETY PIN STOWAGE for:-

Mk. 9 SEAT. - Starboard side of Cockpit. Frame by Windscreen Arch. fitting into Stowage Bracket.

CHAPTER. 7.

AIR CONDITIONING PRESSURISATION AND ASSOCIATED SYSTEMS.

CHAPTER 7

AIR CONDITIONING AND CABIN PRESSURISATION.

CONTENTS

1. GENERAL.
2. AIR CONDITIONING.
2.1. INTRODUCTION.
2.2. COMPONENT DESCRIPTION AND OPERATION.

3. CABIN PRESSURISATION.
3.1. INTRODUCTION.
3.2. COMPONENT DESCRIPTION AND OPERATION.

4. CABIN TEMPERATURE CONTROL.
4.1. INTRODUCTION.
4.2. DESCRIPTION AND OPERATION.

5. CANOPY SEAL SYSTEM.
5.1. INTRODUCTION.
5.2. OPERATION.
5.3. SYSTEM COMPONENTS.

6. WINDSCREEN BOOST DEMIST SYSTEM.
6.1. DESCRIPTION AND OPERATION.

7. EQUIPMENT COMPARTMENT COOLING.
7.1. INTRODUCTION.
7.2. FORWARD AND REAR EQUIPMENT BAYS.
7.3. BATTERY COMPARTMENT.
7.4. LASER COMPARTMENT.
7.5. GROUND COOLING.

8. SERVICING.
8.1. CABIN PRESSURE TEST.
8.2. CANOPY SEAL SYSTEM.
8.3. COMPONENT CHANGING.
8.4. FAULT DIAGNOSIS AND RECTIFICATION.

CHAPTER 7

AIR CONDITIONING AND CABIN PRESSURISATION.

LIST OF ILLUSTRATIONS.

FIG.1. AIR CONDITIONING AND PRESSURISATION.
FIG.2. PRIMARY HEAT EXCHANGER.
FIG.3. PRESSURE REDUCING AND SHUT OFF VALVE.
FIG.4. COLD AIR UNIT AND SECONDARY HEAT EXCHANGER.
FIG.5. WATER EXTRACTOR.
FIG.6. AIR CONDITIONING CONTROL PANEL AND LEVERS.

FIG.7. COCKPIT CONTROLS AND INDICATORS.
FIG.8. GENERAL ATMOSPHERIC INFORMATION.
FIG.9. CABIN PRESSURISATION - ALTITUDE GRAPH.
FIG.10. CABIN PRESSURISATION - ALTITUDE GRAPH.
FIG.11. CABIN PRESSURISATION.
FIG.12. CABIN PRESSURE CONTROL VALVE OPERATION.
FIG.13. AIR CONDITIONING ELECTRICS.
FIG.14. CANOPY SEAL SYSTEM.
FIG.15. CANOPY SEAL PRESSURE REDUCING VALVE.
FIG.16. CANOPY SEAL INFLATION/DEFLATION VALVE.
FIG.17. COMPONENTS - REAR PRESSURE BULKHEAD.
FIG.18. BOOST DEMIST VALVE.
FIG.19. EQUIPMENT COMPARTMENT COOLING FLOW DIAGRAM.

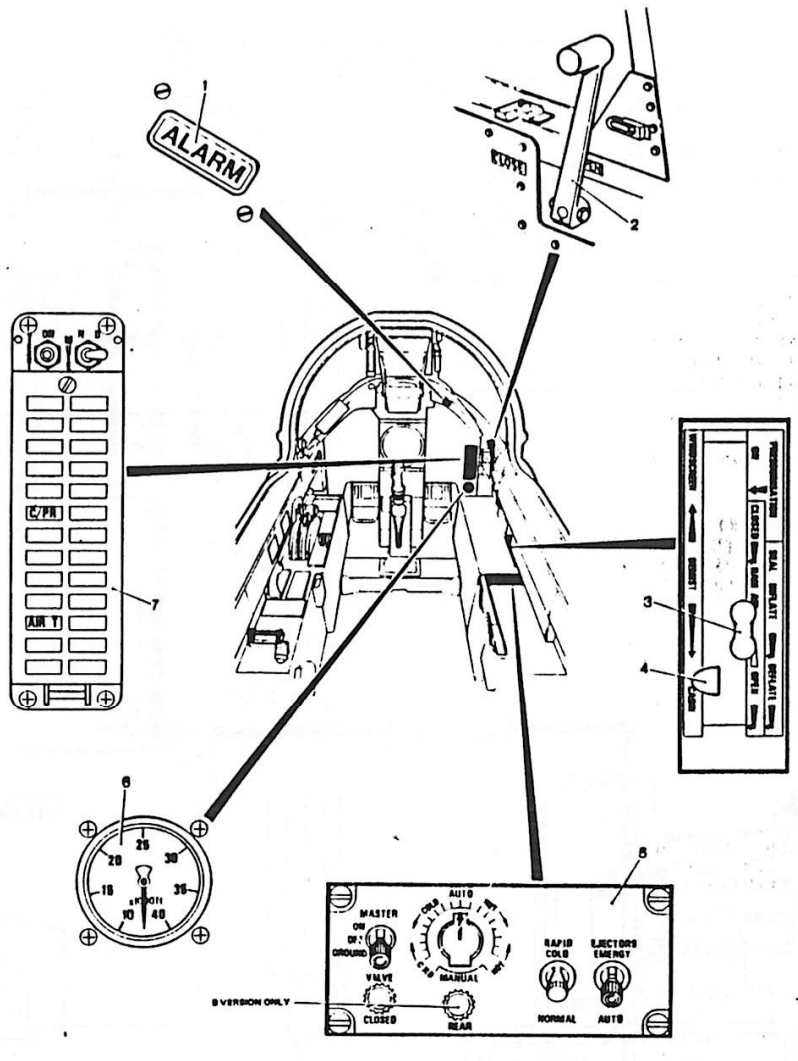

TABLE 1 – CONTROLS AND INDICATORS

Item No.	Item	Location	Marking	Remarks
1	Attention-getter	Right coaming	ALARM	Flashing red
2	Canopy locking handle	Right sill	CANOPY – LOCK FIRMLY OPEN – CLOSE	–
3	Cabin air lever	Right console	Refer to Fig.1	–
4	Demisting control	Right console	DEMIST – WINDSCREEN/CABIN	–
5	Air conditioning control panel	Right console	Refer to Fig.1	'B' version has additional lamp labelled REAR
6	Cabin altimeter	Main instrument panel – lower right	x 1,000 ft	5000 ft graduations up to 40,000 ft
7	Cabin low pressure or canopy locking lever not fully forward warning	Centralized warning panel	C,PR	Red warning plus audio alarm
	Air supply overheat warning		AIR T	Amber warning

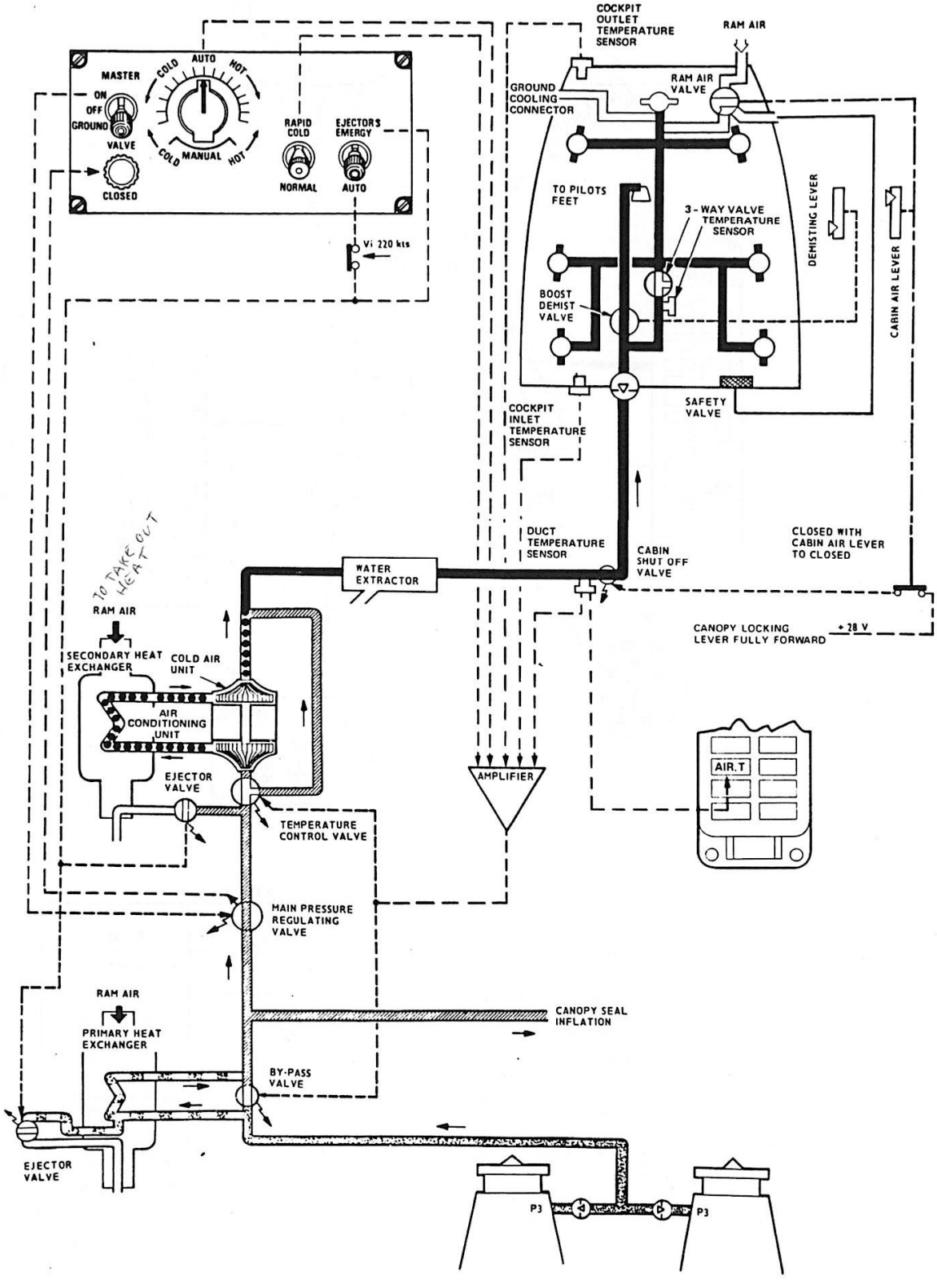

1–8 Fig. 2 Air Conditioning Supply and Distribution – 'S' Version

JACM 1 1-8.2-1(O)

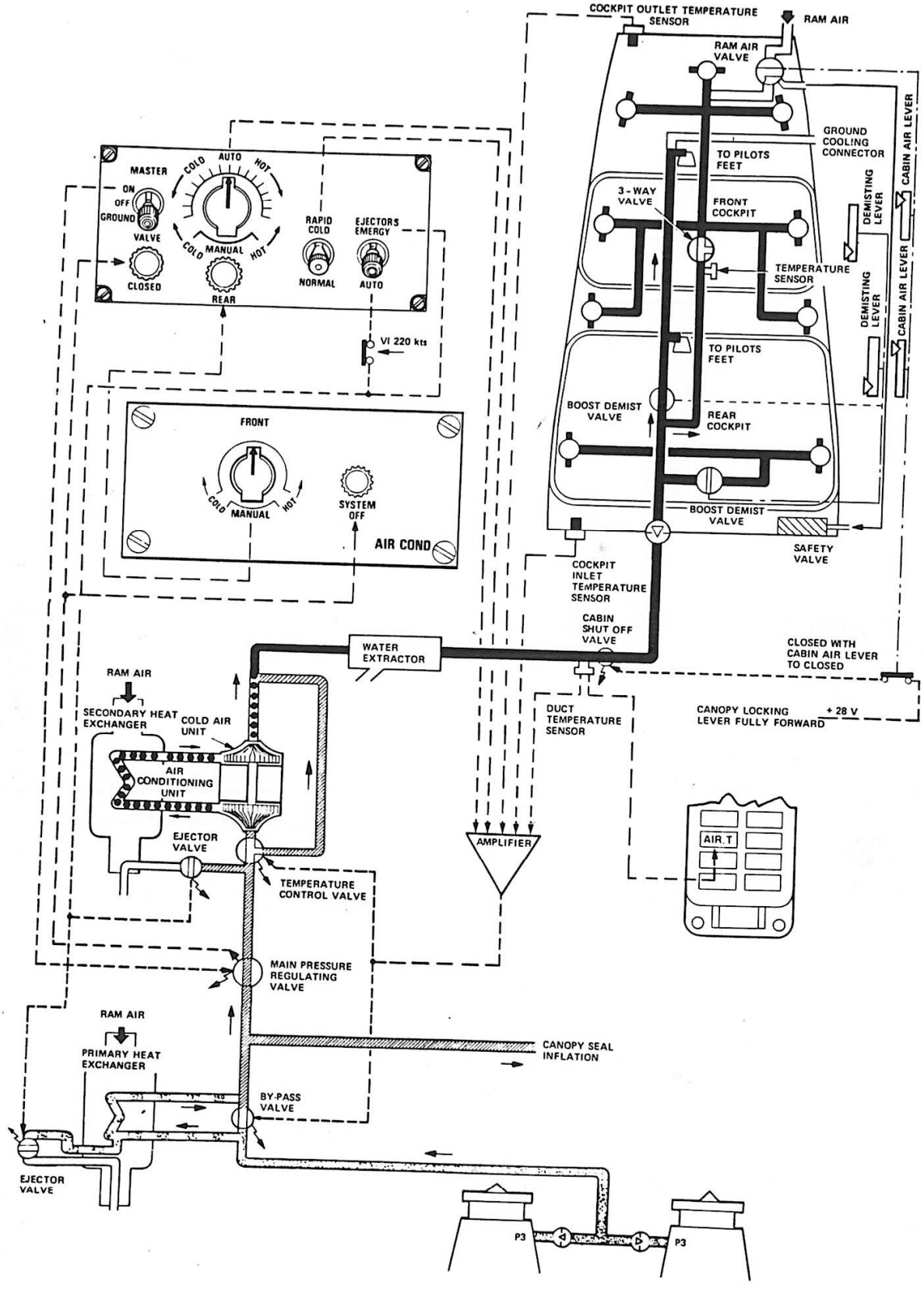

1–8 Fig. 3 Air Conditioning Supply and Distribution – 'B' Version

JACM 1 1-8.3-1(O)

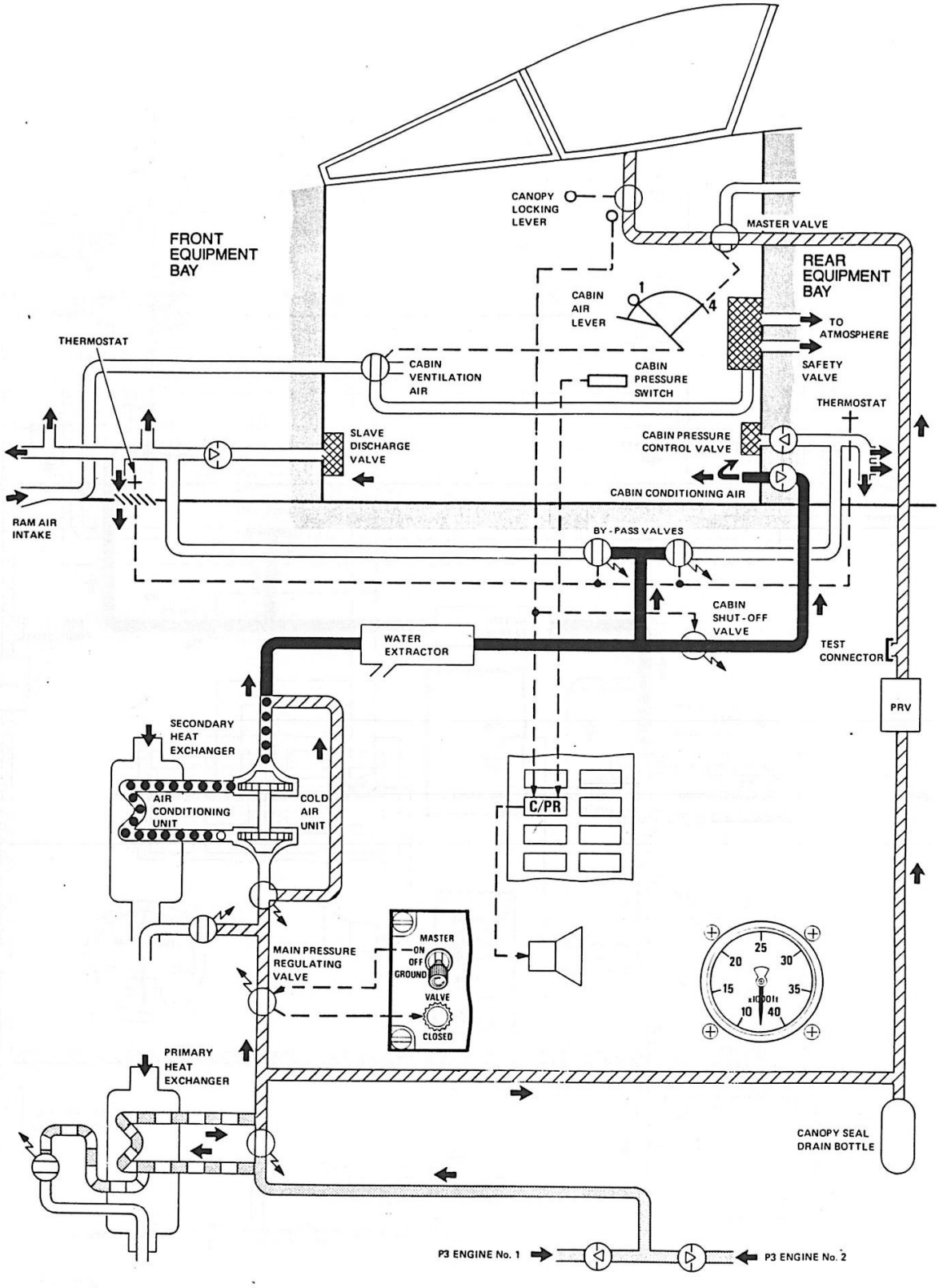

JACM 1 1-8.4-1(O)

1–8 Fig. 4 Canopy Sealing and Cabin Pressurization – 'S' Version

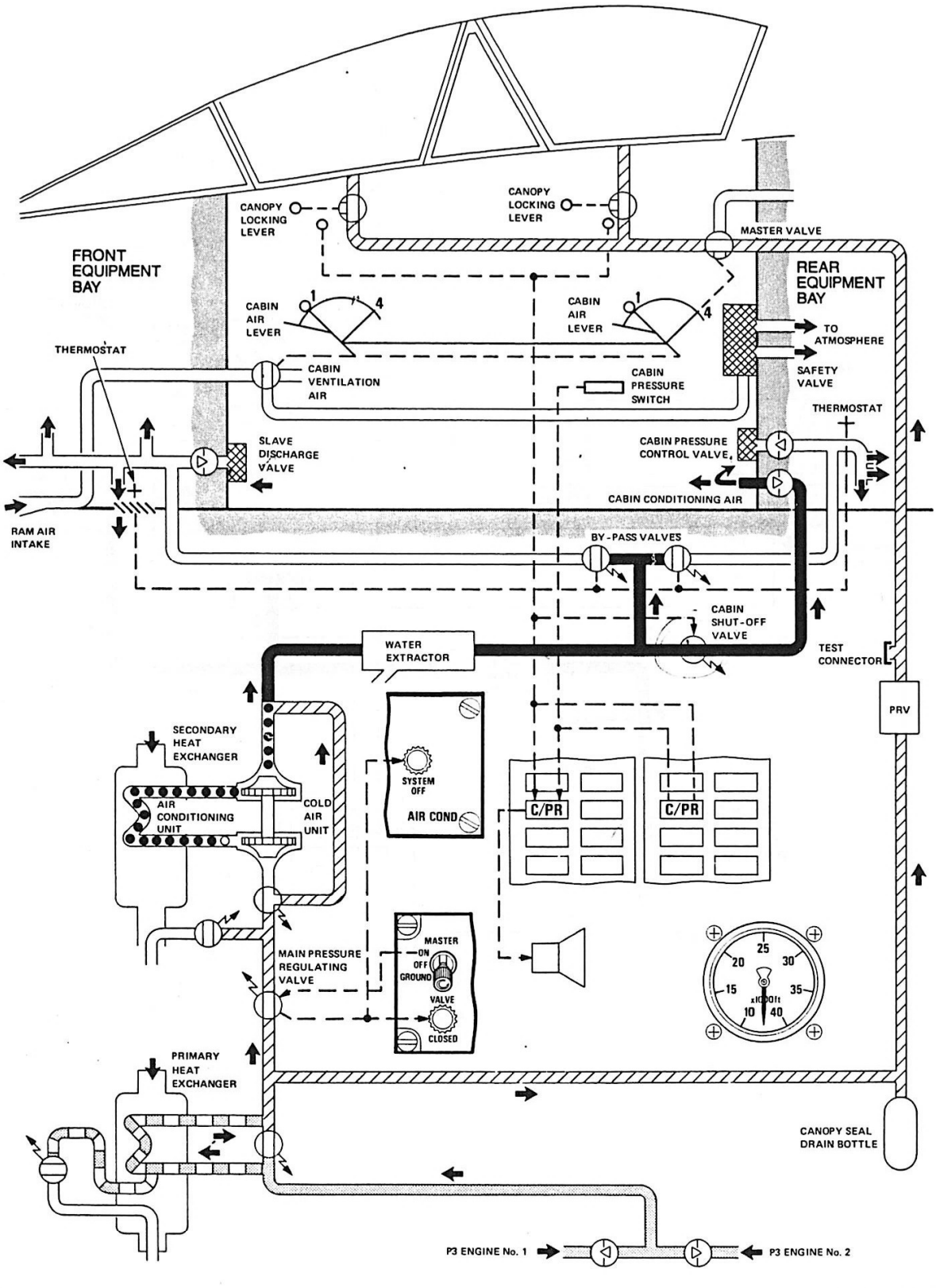

JACM 1 1-8.5-1(O)

1–8 Fig. 5 Canopy Sealing and Cabin Pressurization – 'B' Version

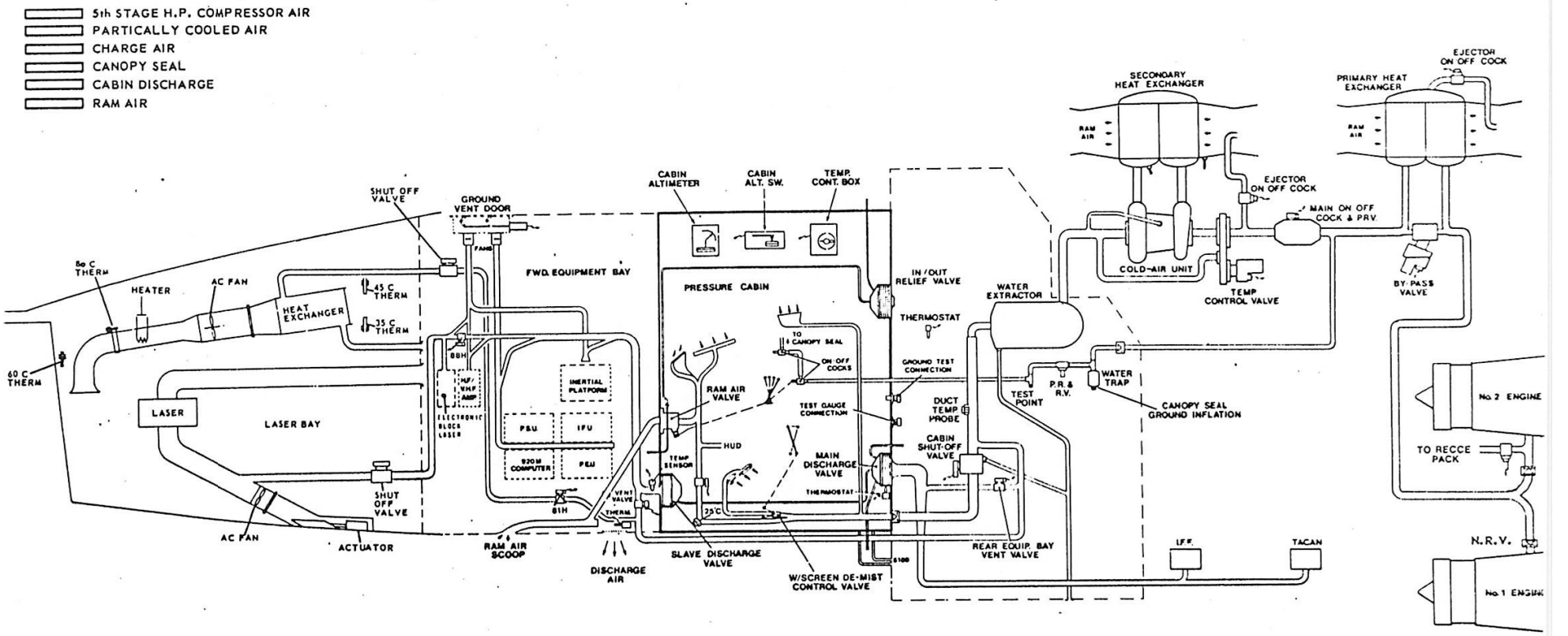

FIG.1 AIR SYSTEM G.A.

AIR CONDITIONING AND CABIN PRESSURISATION.

1. GENERAL.

This chapter deals with the main air system, which supplies air conditioning and cabin pressurisation. A number of subsidiary systems are also fed from this same supply.

Although some details of major components incorporated in the various systems are given in this chapter, reference must be made to relevant Air Publications for any information on the operation and servicing.

The purpose of air conditioning and cabin pressurisation is to maintain comfortable working conditions of pressure, temperature and humidity at all operating altitudes.

2. AIR CONDITIONING.

2.1. Introduction.

Hot air is tapped from the 5th stage of the H.P. compressor of each engine and routed via a Primary Heat Exchange, situated under the rear spine panel at Frame 32, a turbo-compressor Cold Air Unit also located under a spine panel at Frame 10, and thermostatically controlled temperature control valve, adjacent to the Cold Air Unit.

Conditioned air then passes through a water extractor situated in the nose wheel bay on the rear face of Frame 9 and finally into the cockpit.

From the cabin, air passes to the front and rear equipment bays via slave and main cabin discharge valve assemblies, located on the pressure bulkhead at Frames 8 and 9 respectively. Air which passes into the forward Equipment Bay is also used to condition the Laser compartment (IF LASER IS FITTED).

A tapping between the Primary Heat Exchanger and Main Air ON/OFF cock, (Pressure Reducing and Regulating Valve), situated under the spine panel at Frame 25, provides the air supply to inflate the Canopy Seal.

P.3 AIR

The air tapped from the 5th stage of the HP.Compressor is delivered into the main delivery line at temperature varying from 220°C - 320°C and pressures between 40 and 175 p.s.i. dependant on Altitude, Engine Speed and Mass Air Flow.

TEMP
FLOW
TEMP

2.2. Component Description and Operation.

2.2.1. Non-Return Valves.

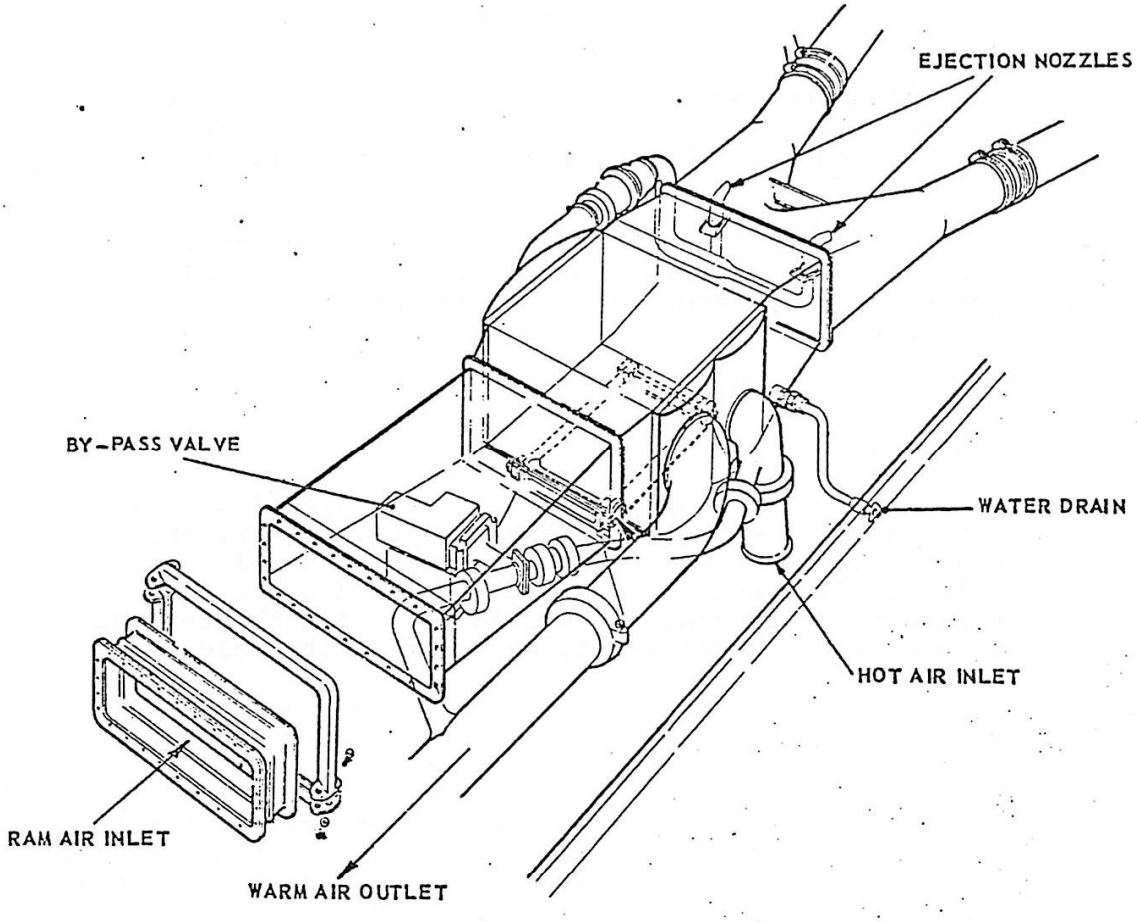

FIG. 2. PRIMARY HEAT EXCHANGER

2.2.1. Non-Return Valves.

Two N.R.V.'s are fitted, one in each engine main supply pipe to the charge air delivery gallery. These valves are installed above the top of the Port and Starboard engine bays at Frame 32. Their function is to prevent loss of charge air through a dead engine in the event of a single engine shut down.

The assembly is manufactured in light alloy and consists of two centrally hinged flaps, which are lightly spring loaded to retain them in the closed position, against the intake sealing ring.

The non-return valve function is to ensure that a flow of charge air can be maintained in one direction only, within the pipe carrying the valve.

Any reverse pressure holds the flaps against their seatings and prevents a reverse flow to that intended within the pipe carrying the valve.

2.2.2. Primary Heat Exchanger.

The Primary Heat Exchanger located in the spine at Frame 32 initially cools the supply air from the engine 5th Stage Compressor.

It consists of a maxtrix formed from a high thermal conductivity metal (nickel alloy), which is subjected to a flow of ram air drawn in by a spine mounted scoop.

The primary heat exchanger is of a cross-flow secondary surface type. The cooling medium being ram air making a single pass, and the HOT supply air making a double pass across the Matrix Face.

The Matrix consists of straight cooling airways and passages with OPEN END matrix faces.

A tapping taken off the turn round chamber supplies air to induce an airflow across the primary heat exchanger, known as an ejector system. (Jet Pump).

Supply air enters the inlet connection, passes through the matrix once and into the turn round chamber. The supply air then passes through the matrix a second time and out into the main air delivery pipe.

2.2.3. Primary Heat Exchanger By-Pass Valve.

This valve is introduced to allow supply air from the Port and Starboard Enginesto by-pass the Primary Heat Exchanger in conditions when the air supplied to the cabin is too cold, and when normal temperature adjusting can not be achieved by operation of the temperature control valve through its amplifier sensing system, i.e. High altitude at Low forward speed.

The operation of the By-Pass Valve is interlinked electrically with the operation of the Temperature Control Valve as follows:-

2.2.3. (Contd).

The By-Pass Valve will only open after the Temperature Control Valve has fully opened.

and conversely,

The By-Pass Valve must fully close before the Temperature Control Valve starts to close

The By-Pass Valve consists of the following:-

A split phase A.C. motor.

A Tacho-generator.

A Butterfly valve.

Reduction gearing.

Two limit switches.

2.2.4. Main Air On/Off Cock. - Pressure Reducing and Regulating Valve.

The Main Air On/Off Cock and Pressure Reducing Valve is operated by the Master ON/OFF Ground switch on the air conditioning control panel, Should the air pressure within the air conditioning system rise above 80 p.s.i. at any time, the Main Air On/Off Cock Pressure Reducing Valve will automatically CLOSE. The valve can only be re-opened by selecting the Master ON/OFF switch to OFF, then reselecting to ON.

Indication of the valve position is by the Master Valve Closed Indicator light on the air conditioned control panel, amber in colour.

Amber light ON	-	Valve CLOSED.
Amber light OUT	-	Valve OPEN.

When the Master ON/OFF Ground switch is selected to 'ON' a 28 v. D.C. electrical supply is available to energise a Relay in the Main Air Shut-Off Valve. By energising the Relay the electrical supply to the 'VALVE CLOSED' indicator is removed.

A 'press-to-test' facility is incorporated in the 'VALVE CLOSED' indicator unit which enables the serviceability of the filament to be checked at any time, provided that electrical supply is available.

When the master ON/OFF/GROUND Switch is selected to ON, an electrical supply energises a relay and the operating solenoid of the Main Air Shut-Off Valve(wired in series via a de-energised relay). By energising the Main Air Shut-Off Valve Solenoid the pressure from the rear of the valve piston is bled to atmosphere, allowing the incoming air pressure to push the valve piston open(against a light spring).The energised relay will extinguish the valve 'CLOSED INDICATOR'

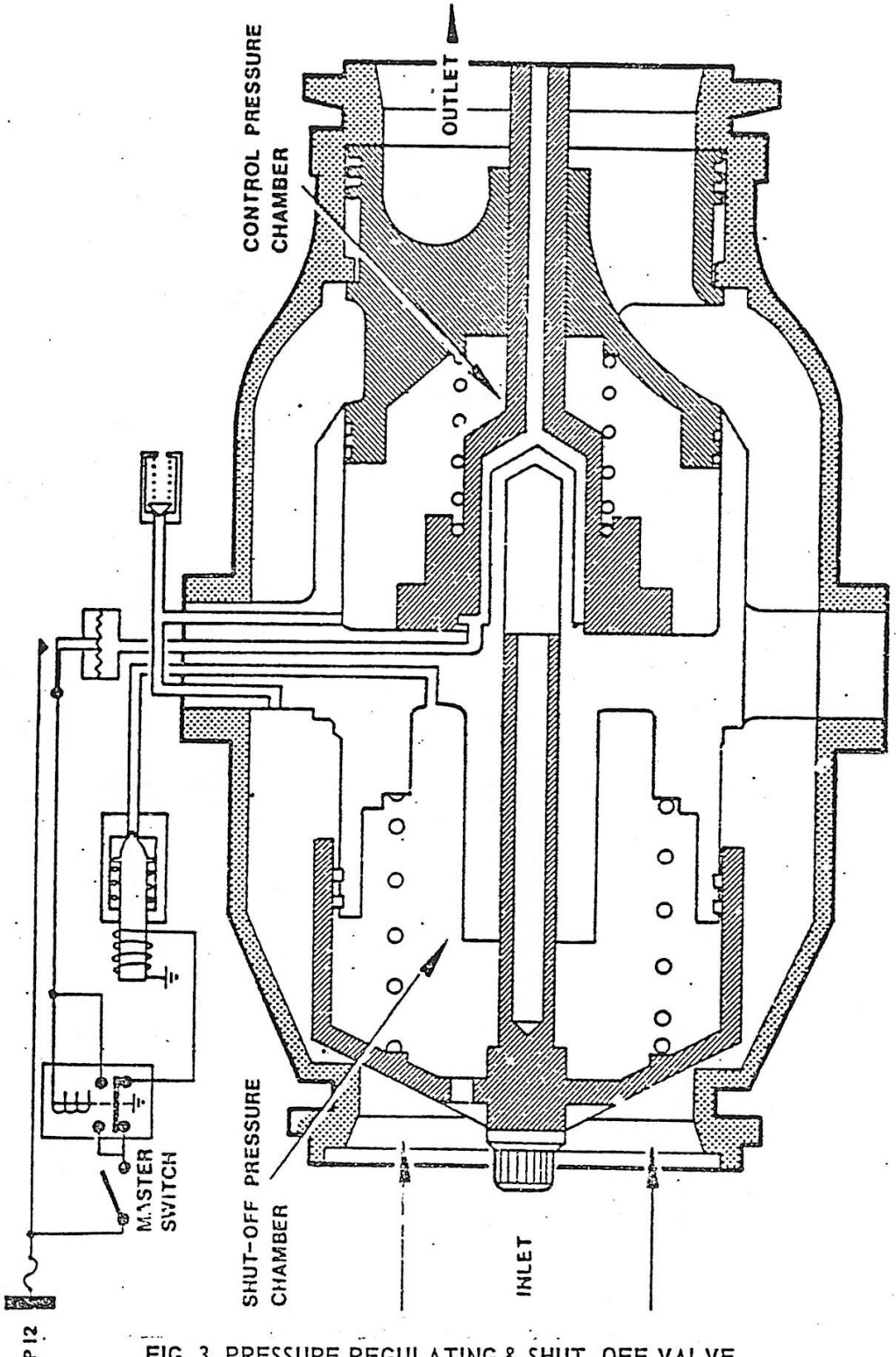

FIG. 3. PRESSURE REGULATING & SHUT-OFF VALVE

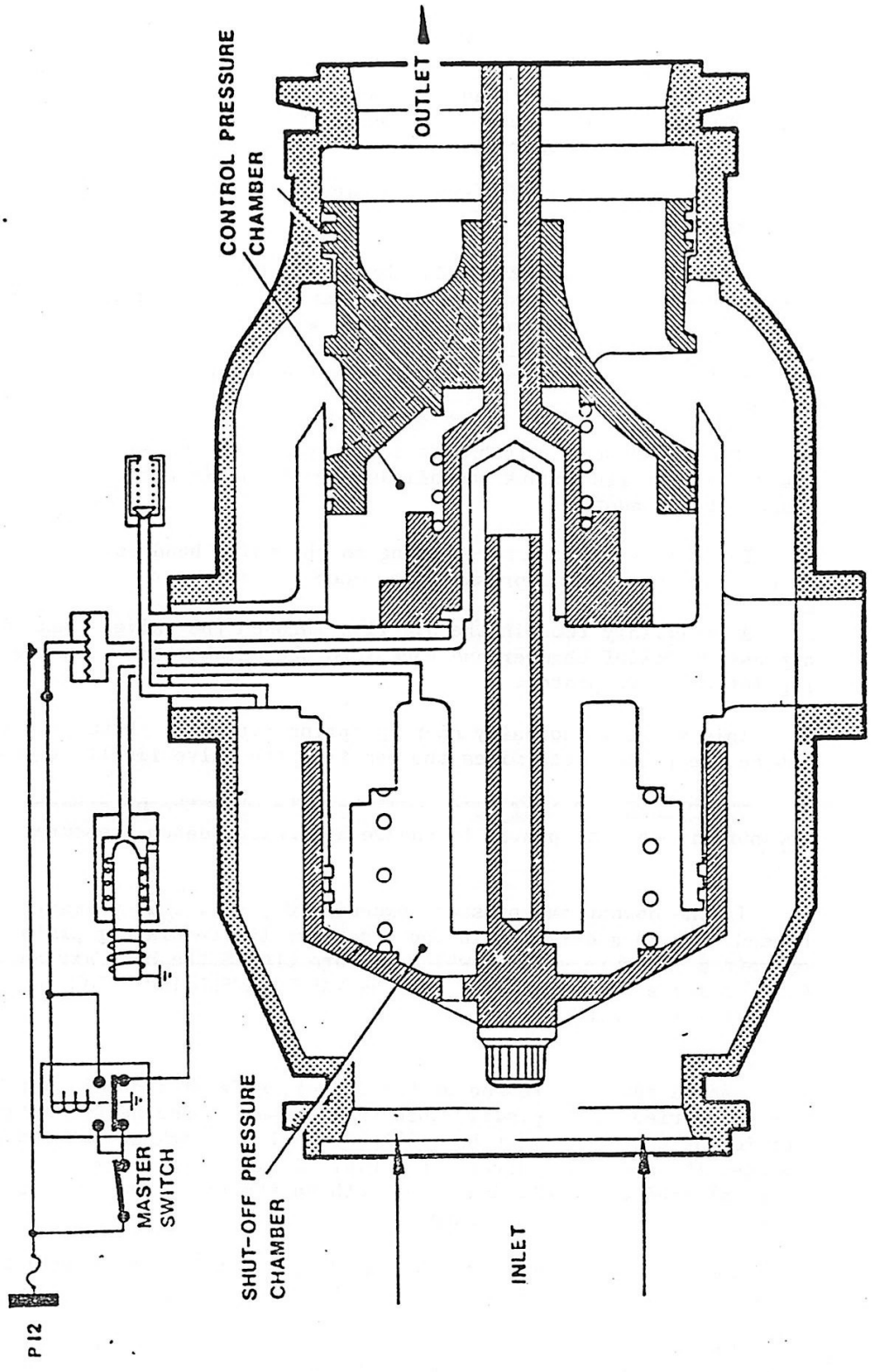

PRESSURE REGULATING AND SHUT OFF VALVE

2.2.4. (contd)

This unit is an inline combined regulating pressure reducing and solenoid operated shut-off valve with the solenoid connected to the body barrel.

The pressure regulating side of the valve consists of a piston, carrying a conical valve head which operates in conjunction with a specially shaped valve seat and takes up a position dependent on the valve pressures on either side of it.

The ON/OFF part of the valve consists of a second piston carrying a conical valve head which engages an annular valve seat.

With the valve electrically closed and the engine running, air pressure is felt on the valve head. A small orifice in the valve head allows air to the shut-off chamber which is of greater effective area than that of the valve head. The resultant force together with the pre-loaded compression spring is sufficient to keep the valve closed.

When the Master switch is selected to ON the solenoid is energised. A vent line opens and allows air in the Shut-off Valve chamber to exhaust.

The supply air pressure acting on the valve head is sufficient to overcome the spring pressure and open the valve.

A capilliary tube in the air flow through the valve, feeds into a pressure relief chamber and back into the datum chamber inside the regulating valve piston.

This valve is normally open by spring pressure. Datum pressure inside the piston determines the position the valve finally takes up.

The Pressure Relief Valve will operate when the up-stream pressure reaches 65 p.s.i. to ensure a constant datum pressure.

If the downstream pressure exceeds 80 p.s.i. this pressure is sensed through a drilling in the centre of the regulating piston to operate a pressure switch, which in turn CLOSES the Main Air Shut-off Cock/Pressure Reducing Valve and the VALVE CLOSED INDICATOR in the cockpit illuminates.

NOTE:
Should the air pressue on the cockpit side of the Main Air Shut-off valve rise to 80 p.s.i. then the pressure reducing/regulating section of the valve must be faulty, or a line blockage be suspected between the shut-off valves and cabin. A high downstream pressure is considered extremely dangerous both to the pilot and the air conditioning system components.

The downstream pressure is sensed by a barometric capsule type pressure switch which forms part of the Main Air Shut-off Valve.

To enable the valve to become opened again the Master ON/OFF/GROUND switch must be selected to OFF then ON.

2.2.4. (contd).

If attempts to re-set the Main Air ON/OFF cock and P.R.V. fail, a faulty valve or electrical failure must be suspected.

2.2.5. Temperature Control Valve.

The Temperature Control Valve consists of a combined gate valve and electrical actuator interconnected by mechanical gearing. The electrical actuator receives HOT and COLD sensing signals from amplifiers and rectifier units which originate from:-

Duct Sensing Probe. - downstream of the Water Extractor.

Cabin Temperature Probes.

One adjacent to the Main Air Discharge Valve.

One fitted into the Slave Discharge Valve outlet pipe in the Forward Equipment Bay.

The position of the Temperature Control Valve determines the proportions by which the air supply is divided to:-

Cold Air Unit.

Cold Air Unit By-pass Pipe.

The two air supplies are re-combined: the temperature of the air being proportional to the position of the Temperature Control Valve.

2.2.6. Temperature Control Selector Switch.

The temperature control selector switch mounted on the Air Conditioning Panel situated on the starboard side of the cockpit shelf, enables a cabin temperature to be initially set, and maintained at that setting by two temperature sensing elements installed within the cabin. It has two modes of operation.

- Automatic HOT/COLD.

In the automatic mode the selector switch stays in the selected position and can vary the temperature setting between 29°C at fully HOT to 15°C in the fully COLD position. Selection of the control switch in a clockwise direction increases and anti-clockwise decreases the temperature setting.

- Manual HOT/COLD.

In the event of a failure in the automatic mode of temperature control the temperature control switch can be selected to Manual, by rotating the switch through 90° from its vertical position. The switch knob is spring loaded to the central position and when in this state isolates the AUTOMATIC circuitry.

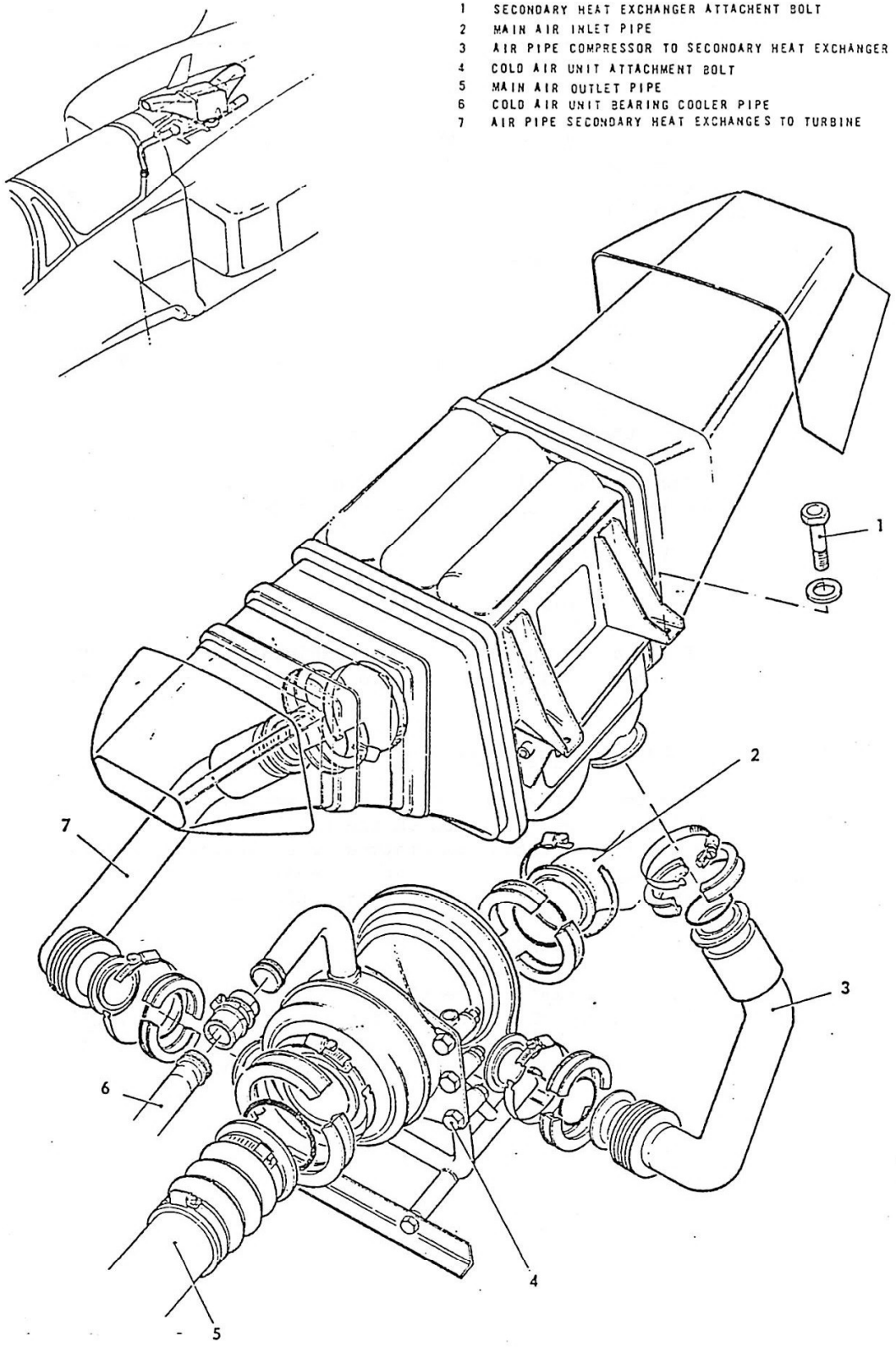

FIG. 4. COLD AIR UNIT AND SECONDARY HEAT EXCHANGER

2.2.7. Cold Air Unit. SECONDARY HEAT EXHANGER

The Cold Air Unit is a Boot Strap turbo-compressor type and operates in conjunction with a Secondary Heat Exchanger, the whole assembly being known as the Refridgeration Pack.

The bearings are lubricated by a self-contained oil pack system consisting of oil soaked cotton wool lubrication wicks.

— The bearings are also cooled by Cold Air Unit outlet air being fed back into the Cold Air Unit.

2.2.8. Secondary Heat Exchanger.

The Secondary Heat Exchanger, is basically indentical to the Primary Heat Exchanger and pre-cools the air before it enters the turbine side of the C.A.U.

It is of a cross-flow secondary surface type. The cooling medium being ram air making a single pass and cooling air making a double pass across the matrix face.

The matrix consists of straight cooling airways and passages with open end matrix faces.

2.2.9. Water Extractor.

The Water Extractor is designed to reduce the water content in the air conditioning supply air.

The unit consits of:-

Coalescer.

Relief Valve.

Swirl Assembly.

covered by an outer casing and insulating jacket.

The Water content is separated by the action of the Coalescer and Swirl Assembly and drains to atmosphere.

If the coalescer should become blocked, the relief valve opens and supply air by-passes the coalescer and moisture air enters the system.

The air temperature leaving the water extractor is always kept above +2°C by the Low Temperature Protection circuits. This temperature being sensed by the DUCT STAT.

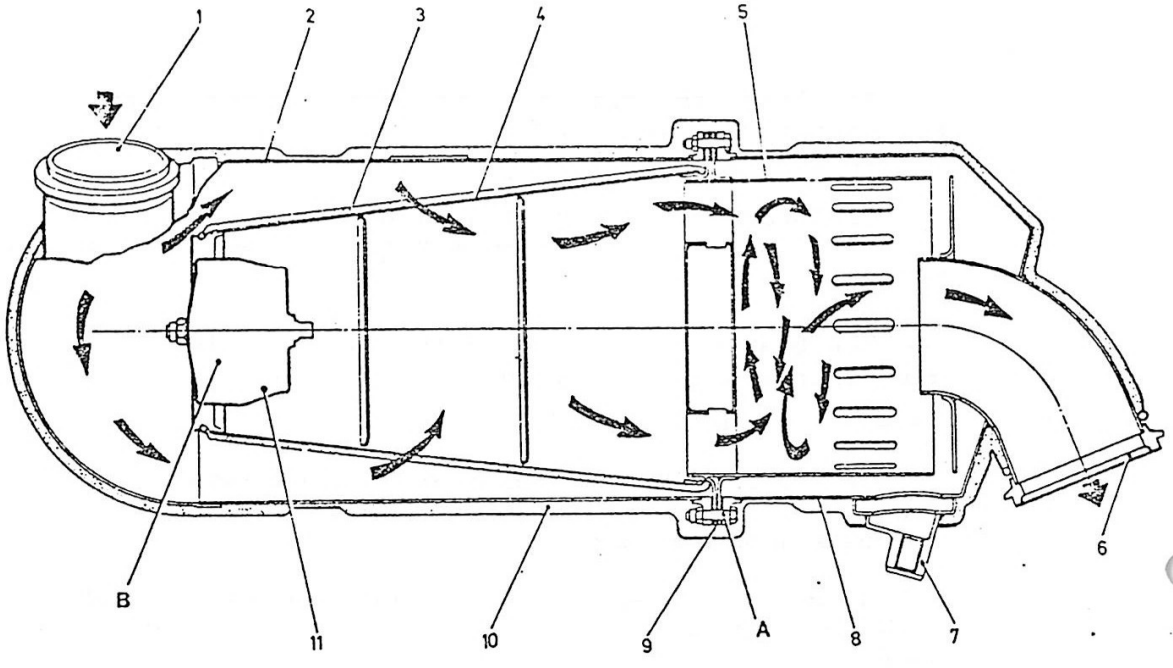

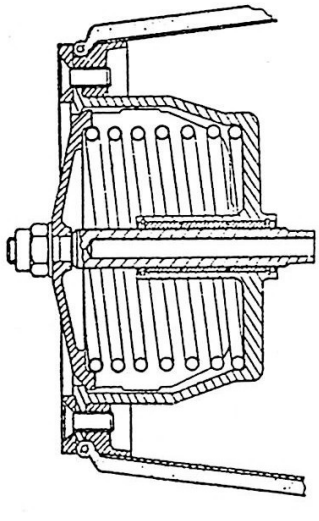

DETAIL B

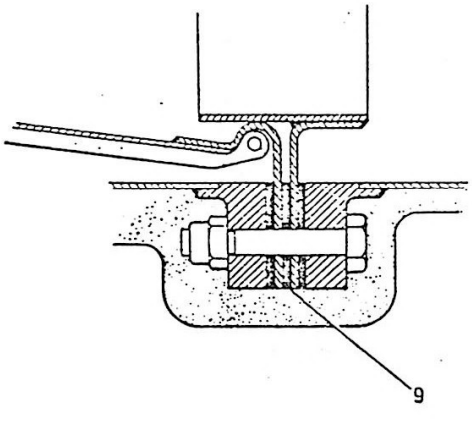

DETAIL A

1 INLET
2 UPSTREAM CASING
3 TERYLENE BLANKET
4 COALESCER SUPPORT ASSEMBLY
5 SWIRL ASSEMBLY
6 OUTLET
7 DRAIN
8 DOWNSTREAM CASING
9 GASKET
10 INSULATING JACKET
11 RELIEF VALVE

FIG. 5. WATER EXTRACTOR

2.2.10. Duct Sensing Probe.

A Duct Sensing Probe is installed to sense, counteract and adjust for variation in air conditioning supply air temperature due to:-

Variation of Engine Temperature for different throttle settings.

Rise in Inlet Temperature above +80° C.

Fall in Inlet Temperature below +2° C.

The duct sensing probe houses four sensing elements fitted into a casing which are

- High Limit Thermostat

Which will operate should the outlet temperature from the water extractor exceed 80°C this illuminates an AMBER caption of AIR 'T' on the Failure Warning Panel.

- Low Limit Thermistor TO STOP WATER FREEZING

Which will operate should the outlet temperature from the water extractor fall to +2° C causing an electrical signal to be sent through an electrical amplifier and relays to motor the temperature control valve to the HOT selection. This thermistor is operative only when the temperature control system is selected to AUTOMATIC.

- Low Limit Thermostat TO STOP WATER FREEZING.

Which corrects and operates if the temperature control system is operating in MANUAL and only effective in MANUAL should the temperature fall to +2°C this will result in a Hot signal being sensed to motor the temperature control valve to the HOT position.

- Differential Sensor

The Differential Sensor which consists of a lagged and un-lagged sensor probe automatically counteracts and adjusts the supply air temperature due to variation in engine temperature for different throttle settings.

2.2.11. Cabin Shut-Off Valve.

The Cabin Shut-off Valve is a 63 m.m. electrically actuated ball valve. Consisting of a line Ball Valve, and Actuator Motor. The motor is clamped to the valve housing by a 'Vee' Clamp. The actuator is WIRE LOCKED ON COMPLETION OF FITTING.

The range of movement is 90° determined by a limit switch shutting off the motor at the end of the movement range. Mechanical stops are incorporated to ensure positive action in the event of a limit switch failure.

2.2.11. (contd).

A 'See feel' position indicator projects through the casing to determine the position of the valve:

The Cabin Shut-off Valve can only be operated when:-

The canopy is CLOSED and LOCKED.

The 4-way Selector Lever is FULLY FORWARD.

The electrical supply to operate the Cabin Shut-off Valve passes from the busbar P12 through the Canopy Lock Micro-Switches and 4-way Selection Lever to run the actuator to the OPEN position.

2.2.12. Ram Air Valve.

This unit is a mechanically-operated flow regulated butterfly valve. It is interconnected with the vent to atmosphere line of the Inward/Outward vent valve.

When the ram air valve is opened the air pressure inside the control chamber of the Inward/Outward Vent Valve is exhausted to atmosphere by action of the vent line within the pipe opening.

The Ram Air Valve is located on the forward pressure bulkhead and operated by movement of the Ram Air Lever situated in the cockpit on the Starboard Console.

Ram Air is ducted into the cockpit from a duct on the Port side of the Fuselage and fed into the Windscreen Distribution System.

2.2.13. Ram Air Lever.

The ram air lever sometimes known as the 4-position lever operates 4 valves.

Cabin Shut-off Valve.

Forward and Rear Equipment Bay Ventilating Valves.

One of the Canopy Seal Inflation Valves. FUMES IN COCKPIT REMOVAL

Ram Air Valve. FUMES IN COCKPIT REMOVAL

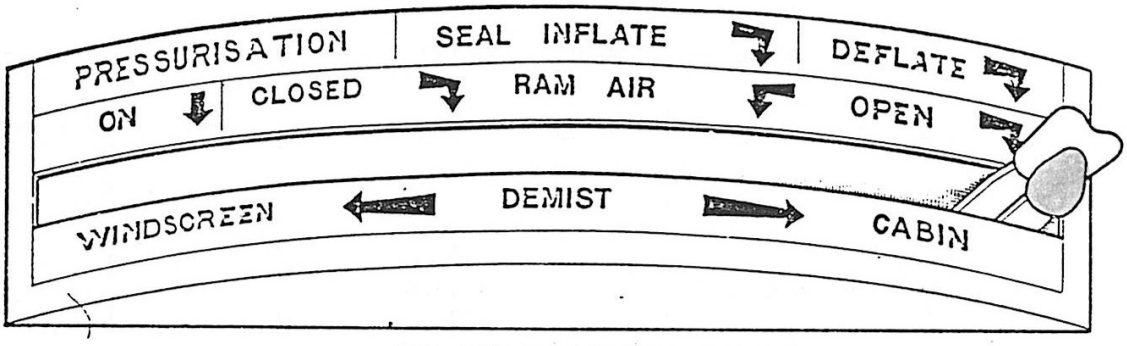

AIR CONDITIONING LEVERS

AIR CONDITIONING CONTROL PANEL

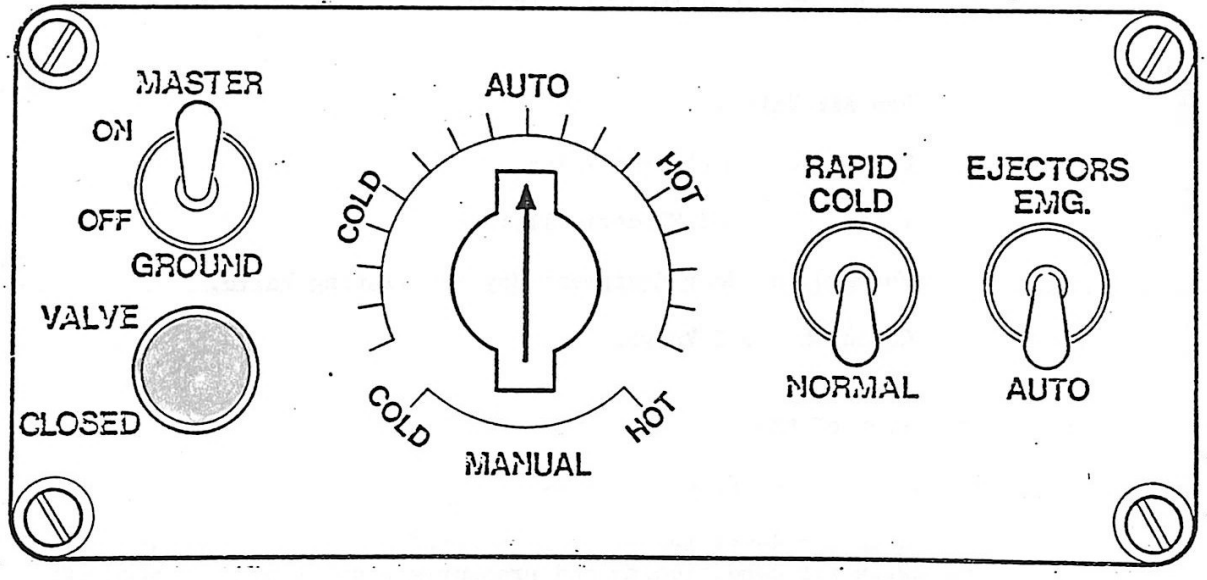

FIG. 6. AIR CONDITIONING CONTROL PANEL & LEVERS

2.2.13. (contd).

The following table gives the functions of the 4-way lever:-

Lever Position.	Cabin Shut-Off Valve.	Equipment Bay Valves	Ram Air Valves.	Canopy Seal.
1. Fully Forward.	OPEN.	CLOSED *	CLOSED.	INFLATED.
2. ⅓ Forward.	CLOSED.	OPEN.	CLOSED.	INFLATED.
3. ⅓ Aft.	CLOSED.	OPEN.	OPEN.	INFLATED.
4. Fully Aft.	CLOSED.	OPEN.	OPEN.	DEFLATED.

* Unless Demanded OPEN by Bay Thermostats.

Valves operated mechanically by movement of the 4-way lever are:-

Ram Air Valve.

Canopy Seal Inflation Valve.

Valves operated Electrically:-

Forward and Rear Equipment Bay Ventilating Valve.

Cabin Shut-off Valve.

Operation of the Lever.

Position 1. - FULLY FORWARD.

With the 4-way lever in this position charge air is available for cabin air conditioning and pressurisation, the Cabin Shut-off valve being open, providing the canopy is CLOSED and LOCKED.

The forward and rear equipment bay ventilating valves will be closed unless demanded open by the equipment bay sensors, and both mechanical valves for RAM AIR and the CANOPY SEAL will be CLOSED and OPEN respectively.

Position. 2. - ⅓ FORWARD.

With the lever in this position there is no Cabin Air Conditioning or Pressurisation and no Ram Air Ventilation, but the equipment

2.2.13. (contd).
bays will still be cooled using engine compressor air through the open Equipment Bay Ventilation Valves. The Canopy Seal remains inflated; whilst the 4-way lever is in position 2.

Positions 3 and 4. - $\frac{1}{3}$ AFT OR FULLY AFT.

Lever positions 3 and 4 are for use with Ram Air Ventilation. In both these positions the Cabin Shut-off Valve is closed, the Ram Air Valve is open and the equipment bays are cooled with engine air through the open Equipment Bay Ventilation Valves. Should a rapid clearance of cabin air be required due to toxic fumes the lever should be moved to position 3 when cabin air will be exhausted through the open OUTWARD RELIEF VALVE, but the canopy seal remains INFLATED. Should a more rapid clearance of cabin air be required moving the lever to position 4 will deflate the CANOPY SEAL.

2.2.14. Equipment Bay Temperature Sensors.

One Thermostat is located adjacent to the Forward Equipment Bay outlet duct and a second Thermostat is in an equivalent position in the Rear Equipment Bay.

The Thermostats are wired in parallel and control the position of a Relay, which in turn controls the forward and rear Equipment Bay Ventilating Valves. Should either of the thermostats sense a temperature of:

$57 \pm 3^{o}C$

a 28v D.C. power supply OPENS the Rear Equipment Bay Ventilating Valve FIRST then Forward E.B.V.V.

In order to prevent the simple control system Hunting, the thermostats are designed to operate to a differential of $15^{o}C$.

i.e. $42^{o} \pm 3^{o}C$ in the hottest bay.

2.2.15. Equipment Bay Ventilation Valves.

Two Equipment Bay Ventilating Valves provide for extra cooling of the FORWARD and REAR Equipment Bays if the system so desires, due to overheating sensed by temperature sensors. The VENTILATING VALVES are electrical actuators which control an ON/OFF Cock, selected electrically by operation of the 4-way Lever or Temperature Sensors.

The Valves are OPEN:

At any time the CABIN SHUT-OFF VALVE is closed.

When demanded OPEN by the temperature sensors at $57^{o}C \pm 3^{o}C$ even though the CABIN SHUT-OFF VALVE is OPEN (with the 4-way lever in POSITION 1).

2.2.16 Ejectors.

Below 250 knots (pre MOD.486) or 220 knots (post MOD.486) there is insufficient ram air flow across the matrics of the heat exchangers to cool the charge air. In order to induce ram air, ejectors are fitted in each exchanger exhaust duct. The ejectors, two in the primary heat exchanger exhaust duct and four in the secondary heat exchanger exhaust duct, are integral parts of the exhaust ducts.

The charge air supply to the ejectors in the primary heat exchanger exhaust duct, is from a tapping in the primary heat exchanger turn-round tank. The charge air supply to the ejectors in the secondary heat exchanger exhaust duct is from a tapping in the main air supply system upstream of the cold air unit. Both supplies are controlled by ejector shut-off valves.

The ejector shut-off valves are controlled by a two-position double-pole switch, an associated signal pick-off unit and a control relay. The switch, marked 'EJECTORS EMERGY - AUTO is on the air conditioning control unit in the cockpit. With the switch in the 'AUTO' position the valves are open until the airspeed exceeds 250 knots (pre MOD.486) or 220 knots (post MOD.486). Above this speed they close automatically, operated by the signal pick-off unit and control relay. With the switch set to 'EMERGY' the valves are permanently open.

2.2.17. Air Conditioning Supply.

Air is tapped from each engine 5th stage H.P. Compressor through two main N.R.V.'s into a common air delivery pipe.

The hot air is then directed through a Ram Air Cooled Primary Heat Exchanger. This Primary Heat Exchanger can be by-passed if necessary.

Partially cooled air passes via a combined Main Air ON/OFF Cock and Pressure Reducing Valve through a gate valve Temperature Control Valve (which can be operated in either the AUTOMATIC or MANUAL mode) and Ram Air Cooled Secondary Heat Exchanger.

Conditioned air is then directed from the Cold Air Unit through a Water Extractor Cabin Shut-Off Valve and N.R.V. into pilot's cock-pit to either side of the pilot's feet and the windscreen and transparencies.

Charge air from the engines is utilised to supply:-

Cabin Pressurisation.

Air Conditioning.

Temperature Control System.

Windscreen Boost De-Mist.

Canopy Seal Inflation.

Ejector System.

Forward and Rear Equipment Bay Cooling.

Lasar Compartment Ventilation.

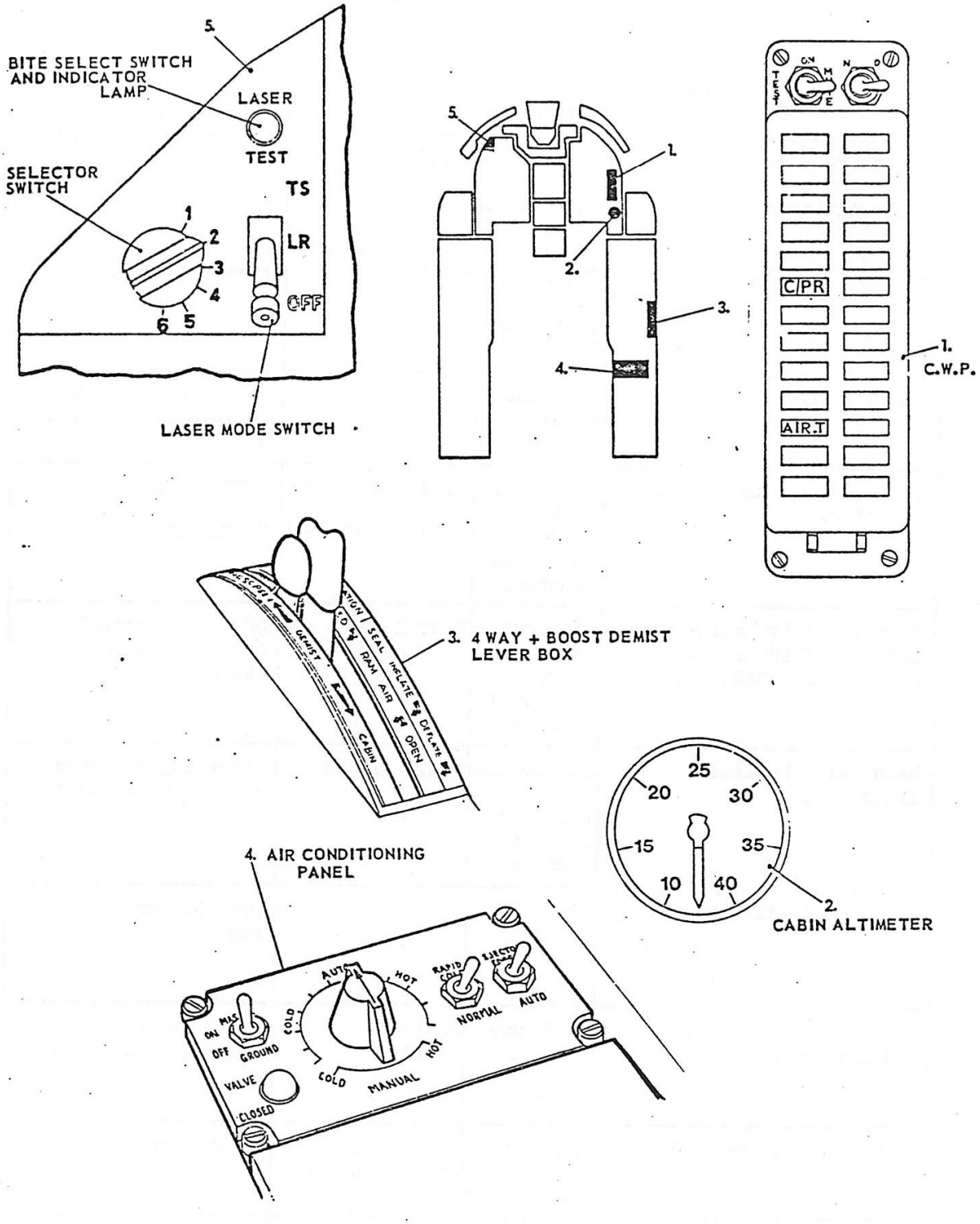

FIG. 7. COCKPIT CONTROLS AND INDICATORS

2.2.18. Controls and Indicators.

The following table lays down the position and operation of the controls and indicators for the Air Conditioning System.

Item	Location	Markings	Remarks
Cabin Pressure Failure, Canopy Unlocked Warning and Cabin Altitude above 27,000 feet.	F.W.P. - Stbd Instrument Panel.	C.P.R.	Red Warning.
Excessive cabin air inlet temperature warning.	F.W.P. - Stbd. Instrument Panel.	AIR T	Amber Warning.
Cabin altimeter.	Stbd Inst Panel.		Graduated 10 to 40 (x 1000 ft) divisions of Five.
Cabin temperature selector.	Air Conditioning control unit Stbd Console.	AUTO: COLD/HOT MANUAL: COLD/HOT	AUTO FWD MANUAL AFT
Main Air Valve and Pressure Reducing Valve Switch (Air Conditioning MASTER Switch)	Air Conditioning control unit Stbd Console.	MASTER ON OFF GROUND	ON - Forward OFF - Central GROUND - Rear
Main Valve Position Indicator.	Air Conditioning control unit Stbd Console.	VALVE CLOSED	Amber Light - When Main Valve is Closed.
Cabin Shut-off Valve	Stbd Console OUTBOARD lever.		Open Forward in Position 1 only.
Canopy Seal Inflate/ Deflate lever.	STBD console OUTBOARD lever.	INFLATE DEFLATE	Position 4 : Deflate Position 1,2 & 3 : Inflate
Rapid COLD Selector Switch	Air Conditioning Panel.	Rapid COLD ON/NORMAL	ON Forward
Ejector Selector Switch	Air Conditioning Panel.	Ejectors EMERGENCY/AUTO	Emergency Forward

2.2.18. Controls and Indicators. (contd).

Item.	Location.	Markings.	Remarks.
Demist Control Lever.	Starboard Console.	Demisting/ Normal.	Inboard Lever Demist Forward Normal Aft.
Ram Air Ventilation Control Lever.	Starboard Console.	OPEN/CLOSED.	Positions 1 and 2 Closed. Positions 3 and 4 Open.
Canopy Locking Lever.	Starboard Console.		
Laser Operating Switch.	Port Instrument Panel.	OFF TS or LR.	Inoperative, System 'ON'

Altitude	Pressure	Density	Pressure	Tempera-ture	Tempera-ture	Speed of Sound	Speed of Sound
Feet	P.S.I.	lb/cu.ft	Millibars	°F	°C	M.P.H.	ft/sec
80,000	0.36	0.002	25	-70	-56.5	660	971
75,000	0.50	0.003	35	-70	-56.5	660	971
70,000	0.66	0.004	46	-70	-56.5	660	971
65,000	0.83	0.005	58	-70	-56.5	660	971
60,000	1.04	0.007	72	-70	-56.5	660	971
55,000	1.31	0.009	91	-70	-56.5	660	971
50,000	1.68	0.011	116	-70	-56.5	660	971
45,000	2.14	0.015	147	-70	-56.5	660	971
40,000	2.72	0.019	188	-70	-56.5	660	971
35,000	3.46	0.024	238	-67	-54.3	661	973
30,000	4.37	0.029	301	-49	-44.4	677	997
25,000	5.46	0.034	376	-31	-34.5	693	1,013
20,000	6.77	0.041	465	-13	-24.6	707	1,035
15,000	8.31	0.048	572	5	-14.7	723	1,058
10,000	10.08	0.056	697	23	- 4.8	739	1,081
5,000	12.23	0.066	843	41	5.1	755	1,105
Sea Level	14.69	0.077	1,013	59	15.0	771	1,128

FROM THE GROUND UP: A table to show the effect of height on the various properties which influence the performance of an aircraft. The stratosphere is defined as the area above such currents of air as are influenced by the earths surface. The height at which the stratosphere begins, i.e. the tropopause, varies with latitude and season but can be taken as approx; 36,000' above which the constant temperature drop with altitude gain no longer prevails, the temperature remaining constant.

FIG. 8. GENERAL ATMOSPHERIC INFORMATION

3. CABIN PRESSURISATION.

3.1. Introduction.

Cabin Pressurisation at sea level and up to 6,000 ft is approximately .5 p.s.i. above outside air pressure. Cabin pressure will then build up gradually with increases in altitude, until a maximum Differential Pressure of 4.3 p.s.i. is obtained at 18,500 ft. Above this altitude the maximum Differential Pressure of 4.3 p.s.i. which has previously been set will be maintained until the aircraft reaches its maximum ceiling.

The cabin pressure is regulated by two Normalair Main and Slave Discharge Valves, situated in the cockpit. The conditioned air discharges through the two discharge valves to provide cooling for the Front and Rear Equipment Bays also the Gun Bay.(Laser Equipment Bay if fitted).

Excessive cabin differential pressure is relieved by the installation of an Inward/Outward Relief Valve, designed to open should the differential pressure in the cabin exceed 4.8 p.s.i. The valve incorporates a further safety factor for negative 'G' conditions. Should a pressure of -.5 p.s.i. be experienced the valve opens.

A Red Pressure Warning is illuminated on the Failure Warning Panel when the Cabin Altitude exceeds 27,000 feet or when the Canopy indicates Unlocked, or if the pressure differential decreases by $\frac{1}{2}$ - 1 lb.

3.2. Component Description and Operation.

3.2.1. General.

Cabin Pressurisation will not be effective unless:-

Canopy is CLOSED and LOCKED.

4-way Lever is selected to POSITION 1. (FULLY FORWARD).

Main Air ON/OFF Cock Pressure Reducing and Regulating Valve is set to 'ON'.

Supply of Conditioning Air has an Unrestricted flow into the CABIN and a Restricted Exhaust through two DISCHARGE VALVES, situated on the PORT SIDE of FRAME 9 and STARBOARD SIDE OF FRAME 7.

The Main Discharge Valve has a control chamber section incorporated, which includes an ABSOLUTE and DIFFERENTIAL CAPSULE, which through a beam and operating rod assembly, controls the OPENING and CLOSING of a SERVO VALVE.

The closing and opening of the SERVO VALVE enables a pressure increase or decrease to take place within the Control Chamber Section

Aircraft Altitude (Ft)	Cabin Altitude (Ft)		
	High Limit	Nominal	Low Limit
20 000	7 900	7 550	7 400
30 000	14 200	13 800	13 600
40 000	19 400	18 900	18 650
50 000	23 300	22 700	22 450
60 000	25 900	25 250	25 000

COMPARISON CHECK OF CABIN ALTITUDE AGAINST AIRCRAFT ALTITUDE.

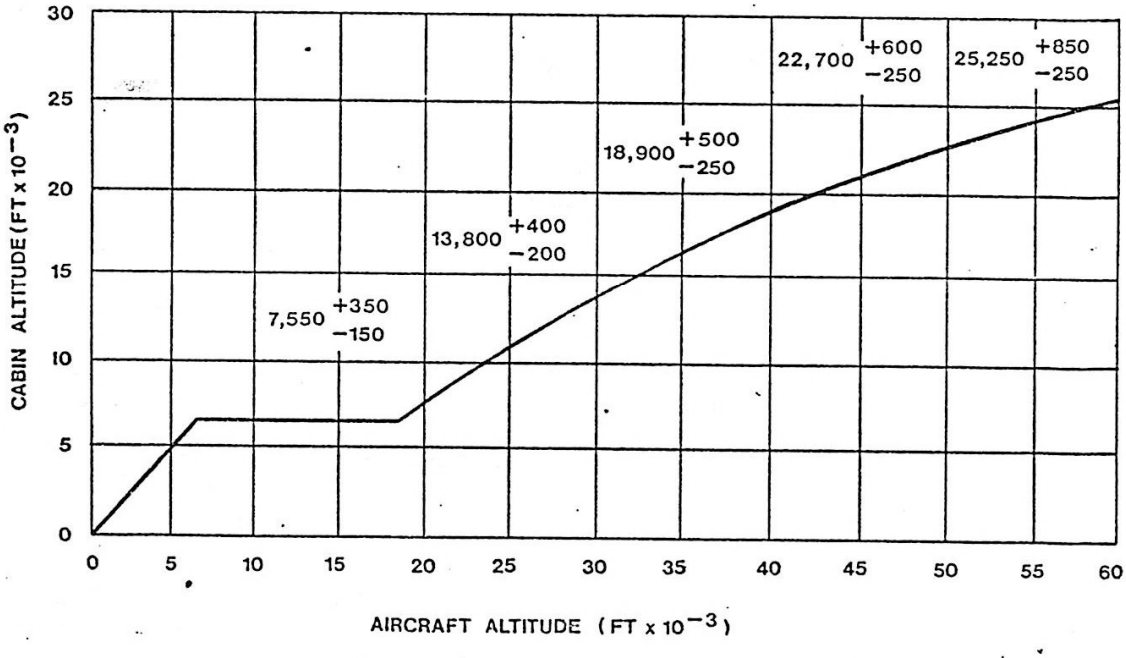

FIG. 9. CABIN PRESSURISATION GRAPH

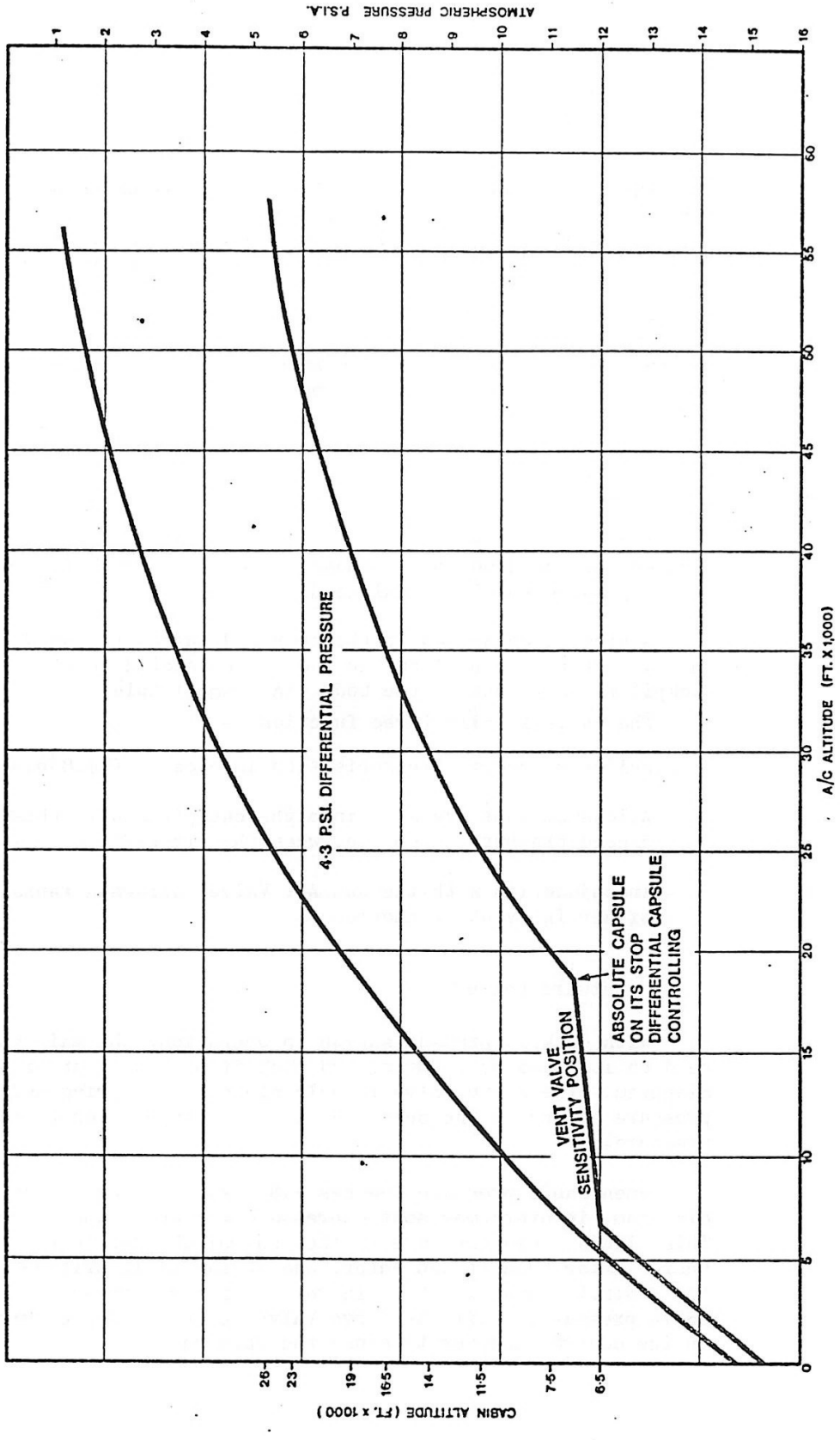

FIG. 16. PRESSURISATION GRAPH

3.2.1. (contd).
of the valve which in turn moves the DISCHARGE section FLOATING PISTON to RESTRICT, or, allows a GREATER FLOW of air to be discharged from the cabin.

The SERVO VALVE enables CABIN PRESSURISATION to be obtained and finally set to give a maximum differential pressure of 4.3 p.s.i. between the OUTSIDE and INSIDE air pressure, at altitudes above 18,500 ft (ABSOLUTE CAPSULE ON ITS STOP) to approximately 60,000 ft.

The pressure established in the Control Chamber of the Main Discharge Valve is also felt in the Slave Discharge Valve through a sensing pipe, So that both Discharge Valves open exactly the same amount to exhaust excess air to both the REAR and FORWARD EQUIPMENT BAYS.

3.2.2. Safety Valve.

The Safety Valve is fitted to the forward face of the Rear Pressure Bulkhead on the starboard side of the cockpit, the main outlet passing thro' the bulkhead.

A pipe is connected to the body and passes to the Ram Air Valve also. a second pipe from the body is connected to static pressure. Cockpit pressure enters the body via a small hole.

The valve fulfils three functions:-

* Relieves Cockpit Pressurisation in excess of 4.8 p.s.i.

Allows ambient pressure into the cockpit should this pressure exceed pressurisation i.e. when the aircraft is in a dive.

Inconjunction with the Ram Air Valve allows a rapid change of air in event of emergency.

- Outward Relief.

With cockpit pressurisation in operation, the main valve is held on its seat by a spring and cockpit pressure acting on the diaphram. The servo valve is held closed by a spring and static pressure acting on the second diaphram in opposition to cabin pressure.

When cabin pressure reaches 4.8 p.s.i. acting on the second diaphram, it overcomes static pressure and opens the Servo Valve. This allows cabin pressure in the control chamber to pass to atmosphere faster than it can enter, due to the small orifice leading to the control chamber. The main valve can now open and discharge cabin pressure, until the Servo Valve reseats and pressure builds up in the control chamber to close the main valve.

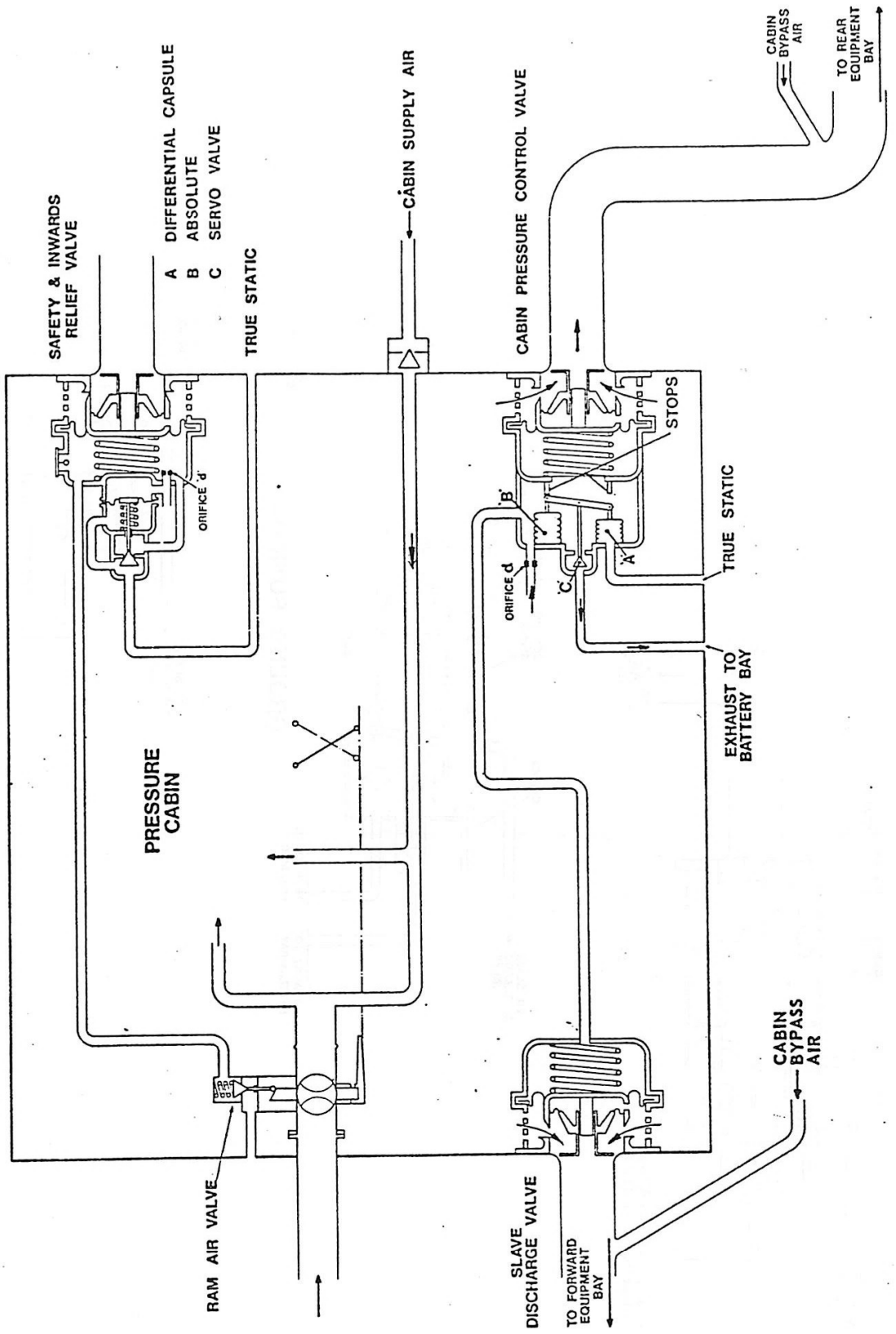

FIG. 11. CABIN PRESSURISATION

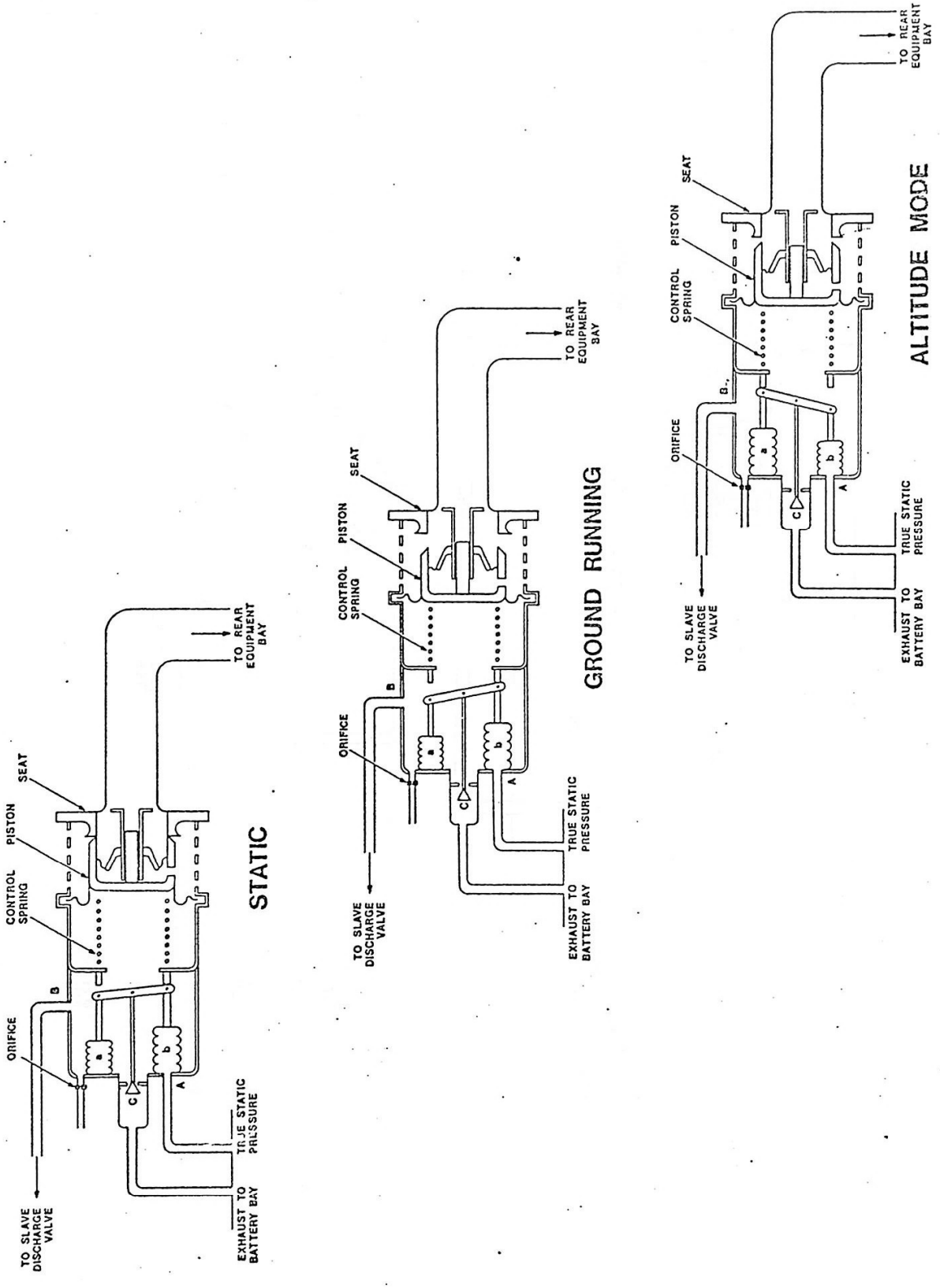

FIG. 12. CABIN PRESSURE CONTROL VALVE (OPERATION)

3.2.2. (contd)

- Inward Relief

In event of ambient pressure exceeding cabin pressure the main valve will be forced open by outside pressure, allowing air into the cockpit.

The cabin pressure in the Control Chamber will be compressed by the main valve opening and be relieved by a P.R.V. in the body.

2.2.2. Ram Air Valve.

The Ram Air Valve is fitted to the forward bulkhead in the cockpit. The inlet is connected to a Ram Air Scoop on the portside of the fuselage, the outlet is connected into the cockpit air distribution pipes.

The valve has a Butterfly Valve, operated mechanically by a Teleflex Assembly connected to, and operated by the Air Conditioning Lever on the Starboard console.

The pipe line from the Outward/Inward safetyvalve is connected to the Ram Air Valve Control Chamber.

A N.R.V. mechanically operated 'OPEN' or 'CLOSED', determines, whether the Safety Valve Line is open to atmosphere thro' the Control Chamber, or blanked 'OFF'.

- Operation.

When the Air Conditioning Lever is selected to Position 3. i.e. $\frac{1}{3}$ aft of centre. The Butterfly valve is opened allowing Ram Air to enter the cockpit distribution pipe, (Cabin Air Valve being 'OFF'), at the same time a Cam on the Butterfly Pivot opens the N.R.V, allowing the pressure from the Safety Valve Control Chamber to vent to atmosphere,- therefore cabin pressure will open the main safety valve and vent the cockpit to atmosphere to change the air.

4. CABIN TEMPERATURE CONTROL.

4.1. Introduction.

The function of the Cabin Temperature Control system is to control the temperature and humidity of charge air supplied to the cockpit to a safe comfortable level. The system can be controlled in two different modes, automatic and manual selection.

4.2. Description and Operation.

4.2.1. Automatic Operation.

Automatic control of cabin air temperature is initially set by selecting the temperature required, between 15°C and 29°C on the control knob, located on the air conditioning control panel in the cockpit. This temperature initially set is maintained by an electronic amplifier actuated by two temperature sensors one in the cabin and one in the outlet duct from the cabin, situated in the FORWARD EQUIPMENT BAY also a duct sensing probe installed in the pipe between the Water Extractor and Cabin Shut-Off Valve.

Temperature variation is achieved by regulating the positions of a Primary Heat Exchanger By-Pass Valve and Temperature Control Gate Valve, which govern the proportions of air cooled by Heat Exchangers and a COLD AIR UNIT to mix with HOT air by-passing the COLD AIR UNIT.

Cabin temperature is automatically adjusted for between 15°C and 29°C by temperature sensing elements within the system. But in the event of the automatic mode failure the system circuit can be selected and controlled manually. A limiting electrical circuit prevents the temperature falling below + 2°C.

* — The signals for adjusting automatically to maintain a temperature between 15°C and 29°C are fed into an amplifier by:-

Temperature Set on Air Conditioning Control Selector Unit.

Two temperature sensing probes adjacent to the Cabin Discharge Valves.

Temperature Sensing Duct-Stat between the Water Extractor and Cabin Shut-off Valve.

Should the temperature in the cockpit fall below, or rise above the controlling temperatures of 15°C - 29°C, the temperature sensing probes adjacent to the cabin discharge valves will transmit a signal of either COLD or HOT to the Temperature Control Amplifier, which in turn operates the Temperature Control Valve Actuator.

The Temperature Control Valve control actuator will motor, and through gearing move the gate valve to either increase or decrease

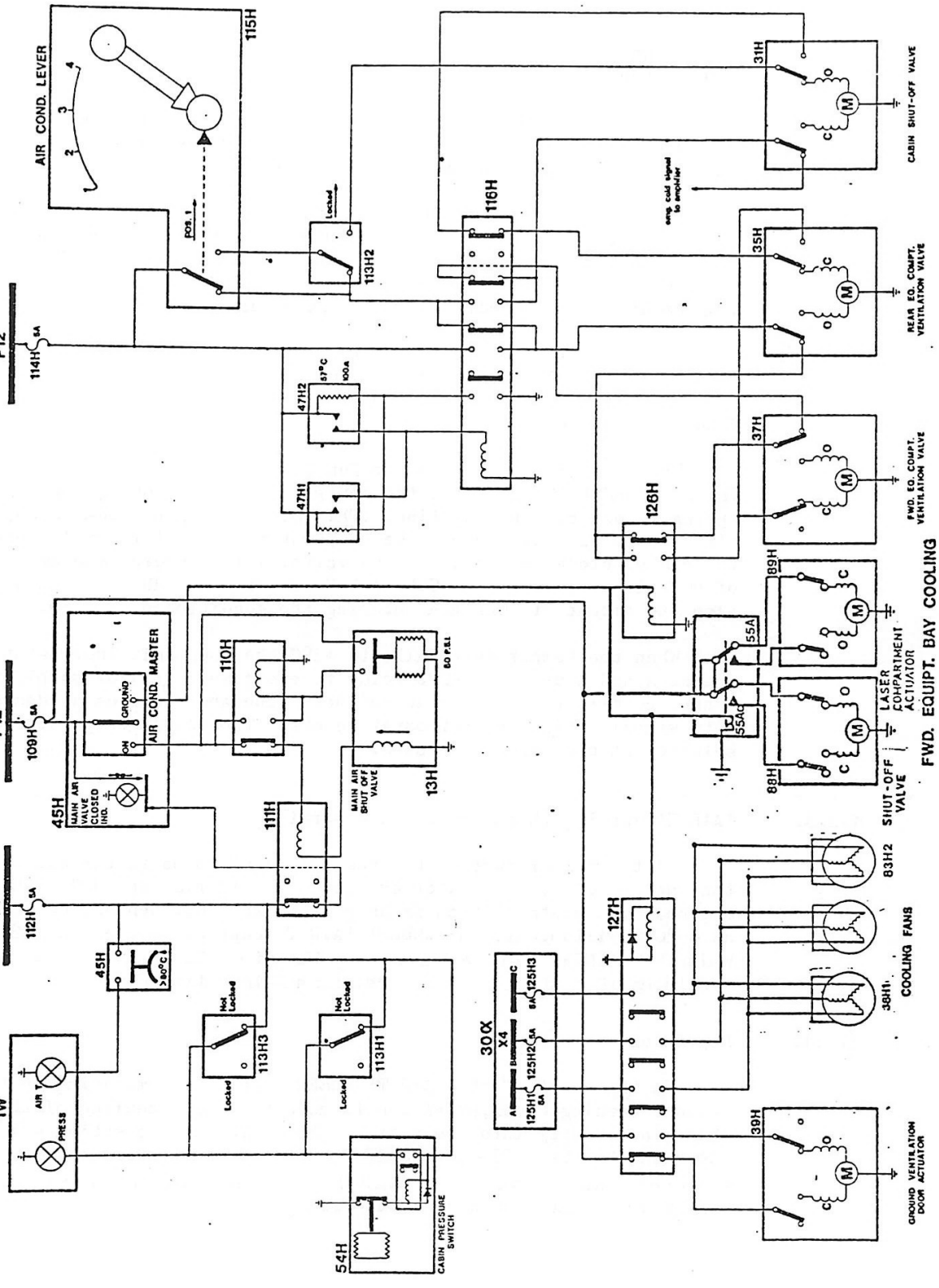

FIG. 13. AIR CONDITIONING (ELECTRICAL DIAGRAM)

4.2.1. (contd).

the amount of HOT air to by-pass the Cold Air Unit and Secondary Heat Exchanger.

If the temperature falls below 15°C a correction signal is delivered to the Temperature Control Amplifier, to correct for malfunctioning of the temperature control system.

At 10°C the Low Limit Thermistor begins to 'back off' the 'Demand cold' signal in the Temperature Control Amplifier. As the temperature falls the 'demand cold' signals are progressively 'backed off' then completely cancelled and a 'demand hot' signal progressively delivered. Maximum control is at + 2°C.

When the air temperature again rises above 10°C the system reverts to normal functioning without any break in continuity.

4.2.2. Manual Operation.

Manual operation of the Air Conditioning Temperature Selector is activated by movement of the control selector knob against its spring loaded central position. This action isolates the automatic circuit and directly motors the Temperature Control Valve Actuator, to open or close the control gate valve, which governs the amount of HOT air by-passing the COLD AIR UNIT and SECONDARY HEAT EXCHANGER, also the amount of COLD AIR entering the conditioning system.

When the temperature falls to +2°C the Low Limit Thermostat operates and causes the +2°C Relay to energise. A 115v supply is connected directly to the 'demand hot' line and provides a 'demand hot' signal until the Thermostat resets. The MANUAL temperature selector is completely isolated.

4.2.3. 'AIR T' Warning (High Temperature Warning).

If the temperature within the air supply pipe to the cabin on the outlet side of the water extractor should rise to 80°C a duct overheat thermostat, which forms part of the Duct Sensor, operates at 80°C to illuminate an 'AMBER' 'AIR T' caption on the FAILURE WARNING PANEL, and a Flashing Warning in which case rapid cooling of charge air is required immediately.

4.2.4. Rapid Cold Selection.

In the event of the 'AIR T' AMBER caption illuminating on the Failure Warning Panel, provision is made for rapid cooling of the charge air supply into the cabin. The Rapid Cold selection which is activated by the RAPID COLD SWITCH, situated on the Air Conditioning Control Panel annotated RAPID COLD/NORMAL, over-rides the Temperature Cobtrol Circuit.

4.2.4. (contd) - Operation.

Selection of the RAPID COLD SELECTOR SWITCH from NORMAL to RAPID COLD, providing that the Temperature Control System is selected in the AUTOMATIC MODE, closes the Primary Heat Exchanger By-Pass Valve if OPEN then actuates the Temperature Control Gate Valve to the fully COLD position, giving a maximum COLD air supply to the cabin. The time taken for the actuators to run to the fully cold selection in this mode is approximately 6 secs.

NOTE:
The Primary Heat Exchanger By-Pass Valve will not OPEN until the Temperature Control Valve is in the fully HOT position and conversely the Temperature Control Valve will not drive to the full COLD position until the Primary Heat Exchanger By-Pass Valve has CLOSED.

Selection of RAPID COLD with the Temperature Control Selector Switch set to MANUAL will render this control system inoperative.

In this configuration the Temperature Control Selector Switch must at the same time be selected to COLD, with RAPID COLD selected to enable the rapid cold system to operate correctly.

- Rapid Cool Failure.

If by selecting the Temperature Control System to RAPID COLD without successfully decreasing the CABIN INLET TEMPERATURE the supply air to the CABIN must be SHUT OFF by selecting the master switch to the GROUND POSITION.

In this configuration no air will be supplied into the AIR SYSTEM but a Ram Air Selection should be made.

4.2.5. Ground Facility.

A Micro Switch fitted to the Port Undercarriage operates the system as follows:-

With the weight of the aircraft operating the Air Conditioning Micro Switch on the PORT MAIN UNDERCARRIAGE LEG, Temperature to the cabin is controlled by the +2°C Duct Stat.

Once the weight of the aircraft is off the ground'making' the Micro Switch on the PORT MAIN UNDERCARRIAGE LEG, Temperature is controlled by the two THERMISTORS situated in the Cabin and Forward Equipment Bay Duct, between 15°C - 29°C.

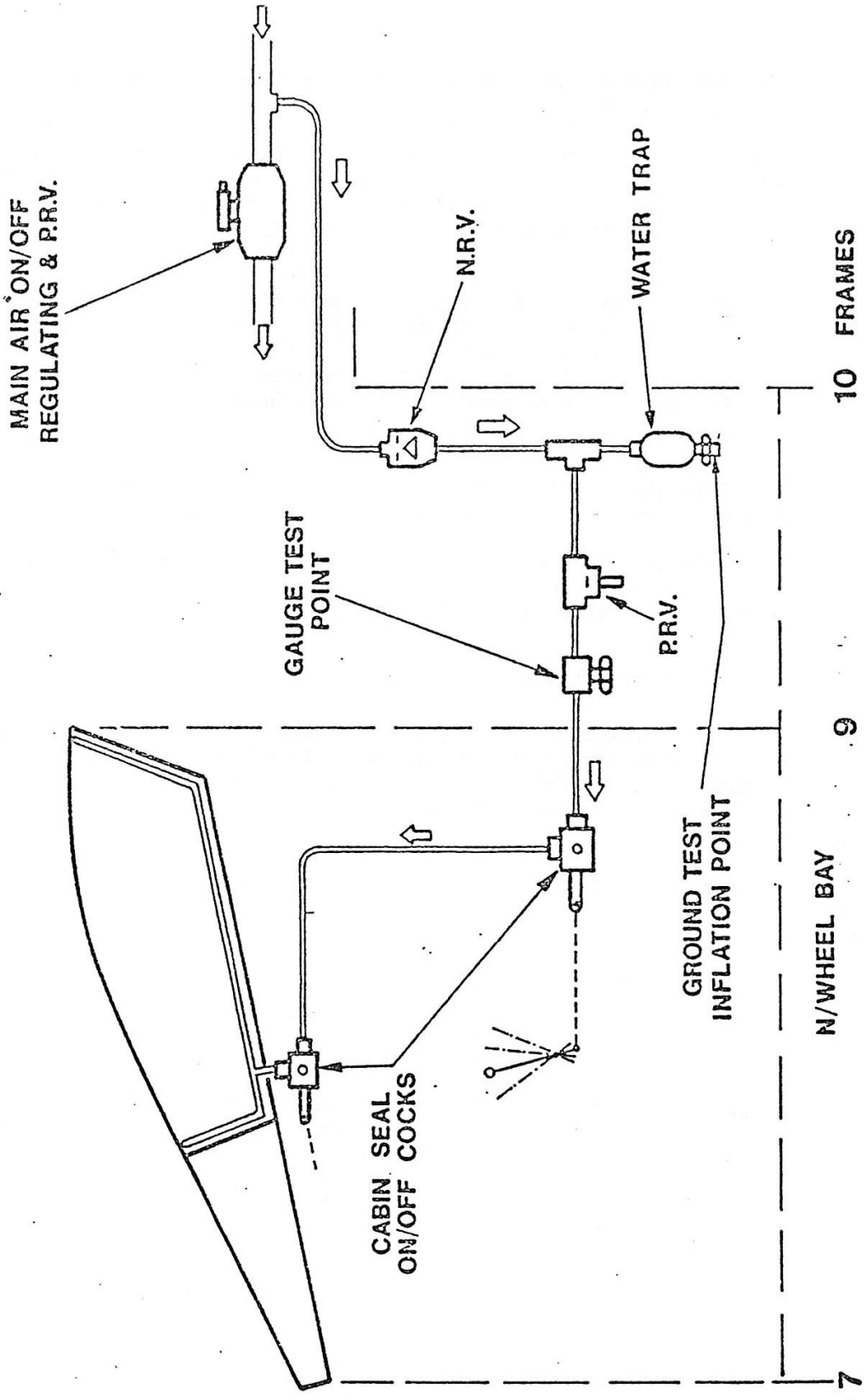

FIG. 14. CANOPY SEAL SYSTEM

5. CANOPY SEAL SYSTEM.

5.1. Introduction.

Canopy sealing is achieved by means of an inflatable rubber seal between the fuselage and canopy.

Charge air is tapped off, up-stream of the Main Air ON/OFF Cock Pressure Reducing Valve.

The air is supplied to the canopy seal via an N.R.V., Water Trap, a combined Pressure Reducing and Relief Valve, to two Canopy Seal ON/OFF Valves in series. One of the ON/OFF valves is operated by the 4-way Selector Lever, in the cockpit STARBOARD console. The second ON/OFF Valve is operated by the canopy locking handle, associated push pull rods and operating levers.

5.2. Operation.

5.2.1. Normal.

To inflate the Canopy Seal the 4-way lever must be in either position 1, 2 or 3 and the Canopy CLOSED and LOCKED.

When air supply to the Canopy Seal is shut-off, by operation of either the 4-way lever or canopy locking lever, the air in the Canopy Seal is exhausted to atmosphere.

5.2.2. Emergency.

In an emergency, if toxic fumes or smoke is present in the cockpit, rapid deflation of the Canopy Seal is achieved by operation of the 4-way lever to position 4(RAM AIR)

The Ram Air Valve opens, the Canopy Seal deflates and the Inward/Outward Vent Valve opens.

5.2.3. External Canopy Seal Inflation.

When the canopy is opened after the aircraft has landed and both engines stopped, the air in the Canopy Seal is exhausted to atmosphere. To enable the cabin to be weather-proofed whilst the aircraft is parked an external air charging valve is provided in the Canopy Seal line. The RAM AIR lever must be in either positions 1, 2 or 3 and the canopy locked before the seal system will pressurise.

5.2.4. Deflation of the Canopy Seal.

To deflate the Hood Seal either the RAM AIR valve lever must be selected to POSITION 4 OR the Canopy Locking Handle must be moved to the UNLOCKED position.

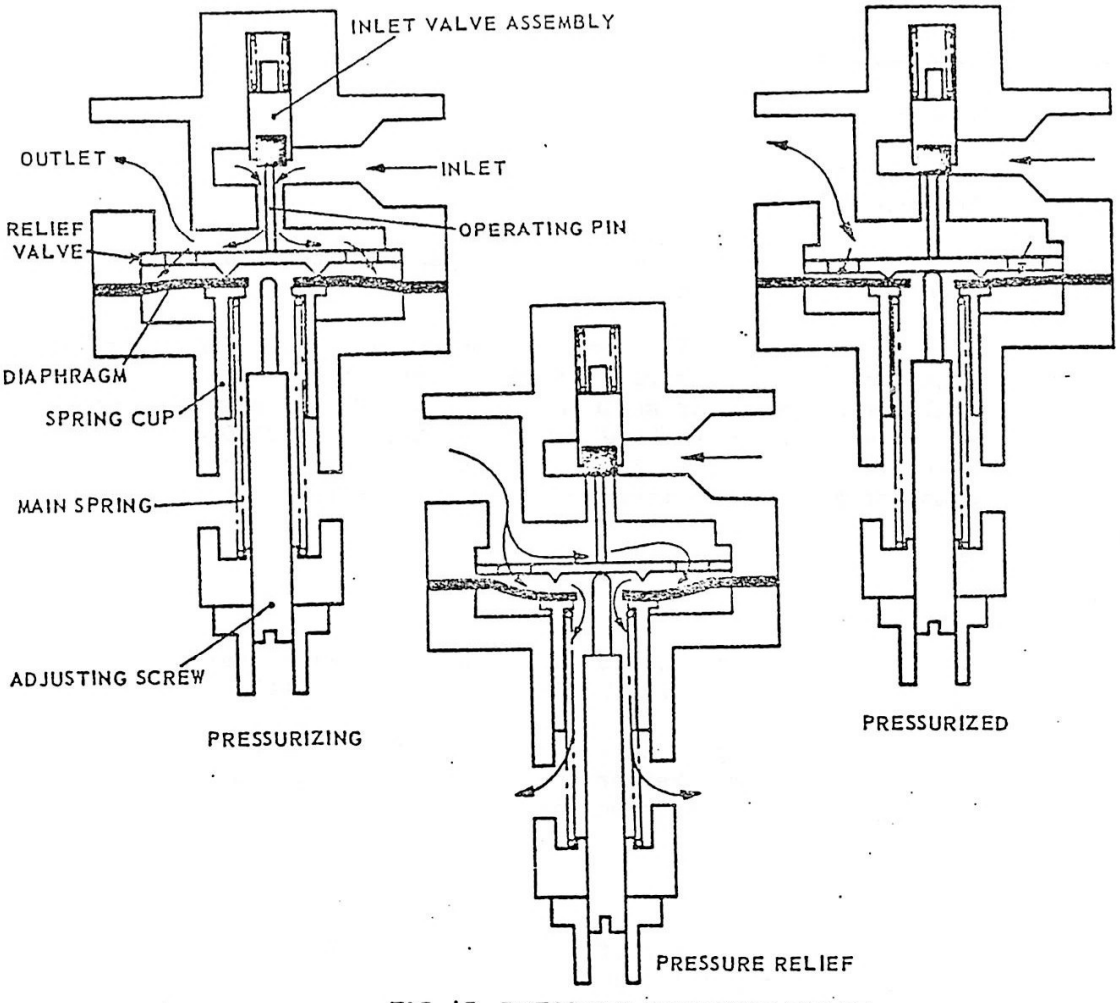

FIG. 15. PRESSURE REDUCING VALVE

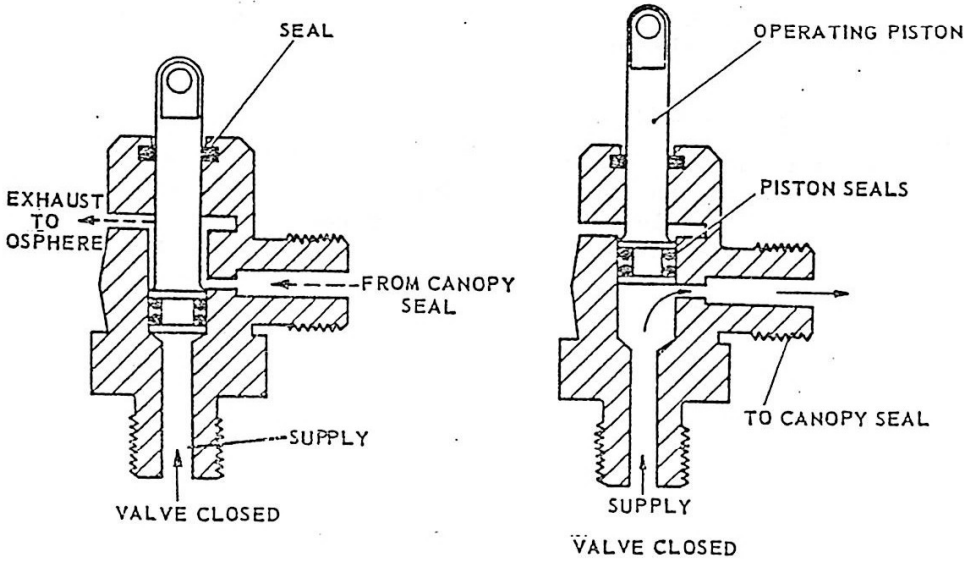

FIG. 16. CANOPY SEAL INFLATION DEFLATION VALVE

5.3. System Components.

5.3.1. Non Return Valve.

The N.R.V. in the canopy sealing system ensures cabin sealing, in the event of cabin supply air failure, for a limited period.

An arrow engraved on the side of the valve indicates the directional flow.

5.3.2. Purging Bottle.

The Purging Bottle is fitted to trap any moisture in the air. It has a combined drain and inflation connection at the base.

5.3.3. Combined Pressure Reducing and Relief Valve.

The unit consists of a Pressure Reducing Valve Chamber and a Pressure Relief Valve Chamber in two halves bolted together. A rubber diaphragm forming a seal between the two chambers.

Incorporated in the valve is a filter and a pressure adjusting screw. To INCREASE the relief pressure the adjusting screw is turned CLOCKWISE, and to DECREASE the relief pressure the adjusting screw is turned ANTI-CLOCKWISE.

* The valve reduces the system working pressure to 11 lbs/sq.in. and the valve safety factor relieves at 15 lbs/sq.in.

- Operation.

(No pressure in system reducing valve open).

Air enters inlet connection and passes thro' a filter and flow restrictor to the open valve. The air passes between the valve seat, around the regulating valve spindle to the regulating chamber and then out to the system to inflate the seal.

As the pressure builds up in the system, it acts on the regulating plate and diaphram forcing them down, compressing the main spring, this allows the regulating valve to close and blank off the pressure inlet.

If excessive pressure builds up on the outlet side of the valve, the plate valve will continue to compress the main spring until it reaches the adjustment screw stem. The diaphram can now deflect away from the plate valve, allowing excess pressure to escape to atmosphere.

5.3.4. Canopy Seal inflation/deflation valve.

Two identical inflation/deflation valves are used in the system; one of the valves is bolted to a bracket under the starboard sill whilst the second valve is bolted to a bracket adjacent to the air conditioning control unit in the starboard console. The operating

5.3.4. (contd).

piston of the first valve is connected to the canopy locking handle, whilst the operating piston of the second valve is connected to the air conditioning lever; this second valve controls the air entering the canopy seal system.

The valves comprise, male inlet and outlet connections and an exhaust line. A mechanically-operated piston moves in a guide carried in the bore of the inlet connection and acts as a gate to the outlet connection. Two rubber O-rings serve as a seal between the piston and the walls of the bore.

- Operation.

When the 4 way lever is moved to positions 1. 2 or 3. the Plunger is depressed, which blanks off the line to atmosphere and directs pressure to the Canopy Seal Inflation Valve. When the lever is returned to Position 4, the pressure is blanked off and the seal line opens to atmosphere.

The same operation takes place when the canopy is closed and the canopy lever is pushed forward to lock the canopy. Air now enters directly into the Canopy Seal. Cabin Seal pressure is vented to atmosphere when either canopy seal inflation valve plunger is not pressed, i.e. Canopy not locked or 4-way lever not in Position 1, 2 or 3.

* If at any time the canopy is UNLOCKED in flight a RED LIGHT illuminates at the Failure Warning Panel.

Canopy Seal Pressure Gauge Connection.

A tee-junction incorporated in the system piping between the pressure reducing valve and the canopy seal control inflation/deflation valve, provides a gauge connection. The tee-junction is secured to a bracket on the rear face of the rear pressure bulkhead below the water extractor and inboard of the cabin shut-off valve. A protective dust cover, forming a seal, is secured to the frame by a chain.

5.3.5. Canopy Seal.

A hollow Terylene-reinforced silicon rubber seal is bonded to the windscreen arch, canopy sills and rear arch of the cockpit. The seal has an inflation tube which passes through a hole in the starboard sill and is connected, by a metal tube, to the canopy seal inflation/deflation valve. The inflation tube is secured to a bracket by a P-clip. A rubber lip is bonded to the side of the canopy seal to improve the water tightness of the cockpit when the aircraft is parked.

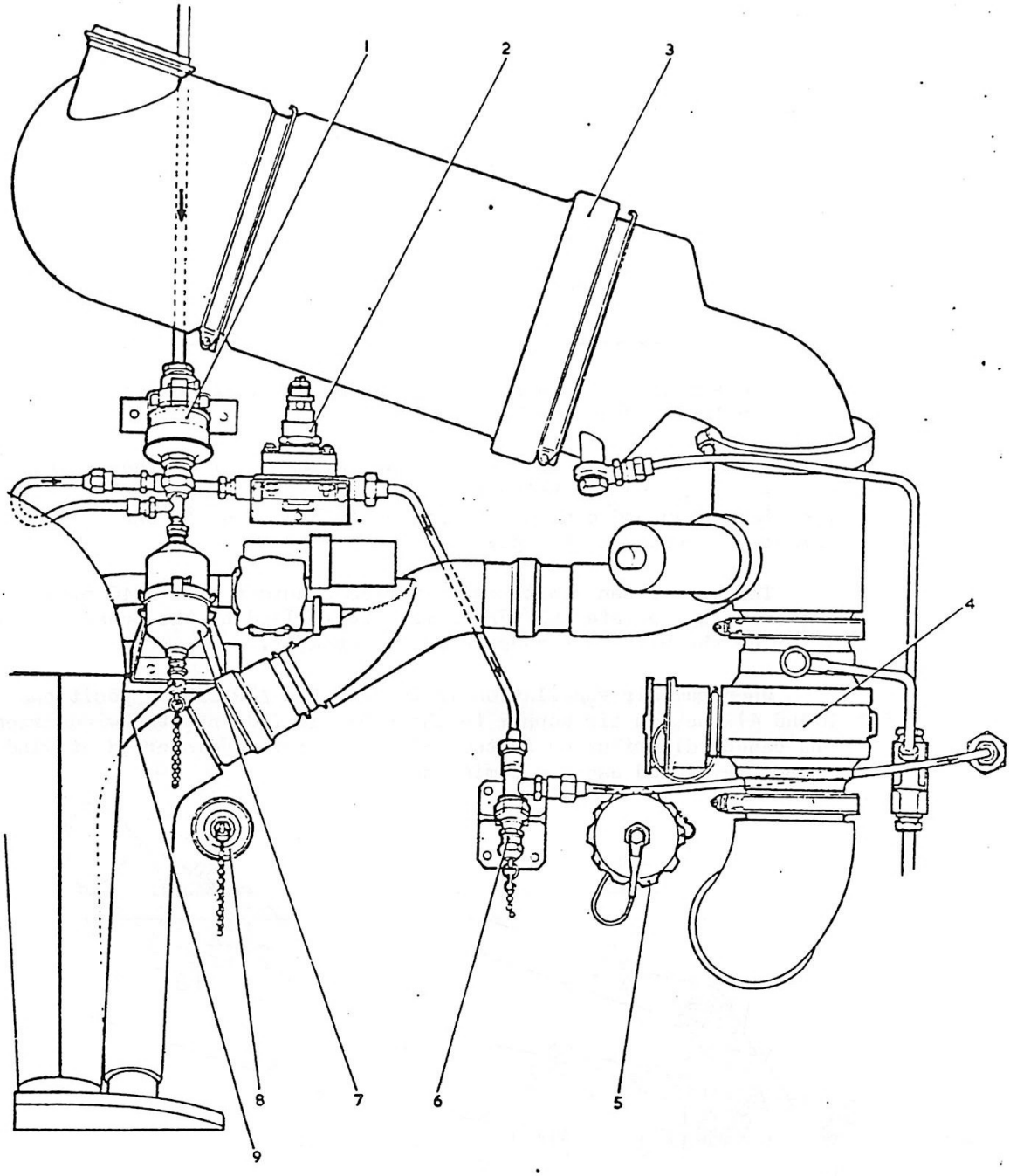

1 NON-RETURN VALVE
2 PRESSURE REGULATING AND RELIEF VALVE
3 WATER EXTRACTOR
4 CABIN SHUT-OFF VALVE
5 CABIN PRESSURIZATION GROUND CONNECTION
6 CANOPY SEAL PRESSURE GAUGE CONNECTION
7 DRAIN BOTTLE
8 CABIN PRESSURIZATION GAUGE CONNECTION
9 CANOPY SEAL GROUND INFLATION CONNECTION

FIG. 17. COMPONENTS REAR PRESSURE BULKHEAD

6. WINDSCREEN BOOST DEMIST SYSTEM.

6.1. Description and Operation.

Normal demist air supply is available whenever the cabin conditioning system is selected to ON. Conditioning air is directed to:-

Front Windscreen.

Canopy Transparencies.

Pilots Feet Station.

The air flow is controlled by the Demist lever which is a two-position lever, NORMAL or DEMIST.

When Demist is selected - the operating lever in the cockpit closes a Boost Demist Valve, which directs all the supply air to the windscreen and canopy transparencies, and cuts off the air supply normally directed to the pilot's feet.

The Windscreen Boost Demist System consists of - a 40 m.m. mechanically operated ON/OFF valve. Controlled by the Boost Demist lever on the STARBOARD console in the cockpit.

When ram air ventilation is in use (RAM AIR LEVER positions 3 and 4) the ram air supply to the cabin is fed into the windscreen and canopy distribution system: air is therefore dispersed at windscreen level and assists demisting.

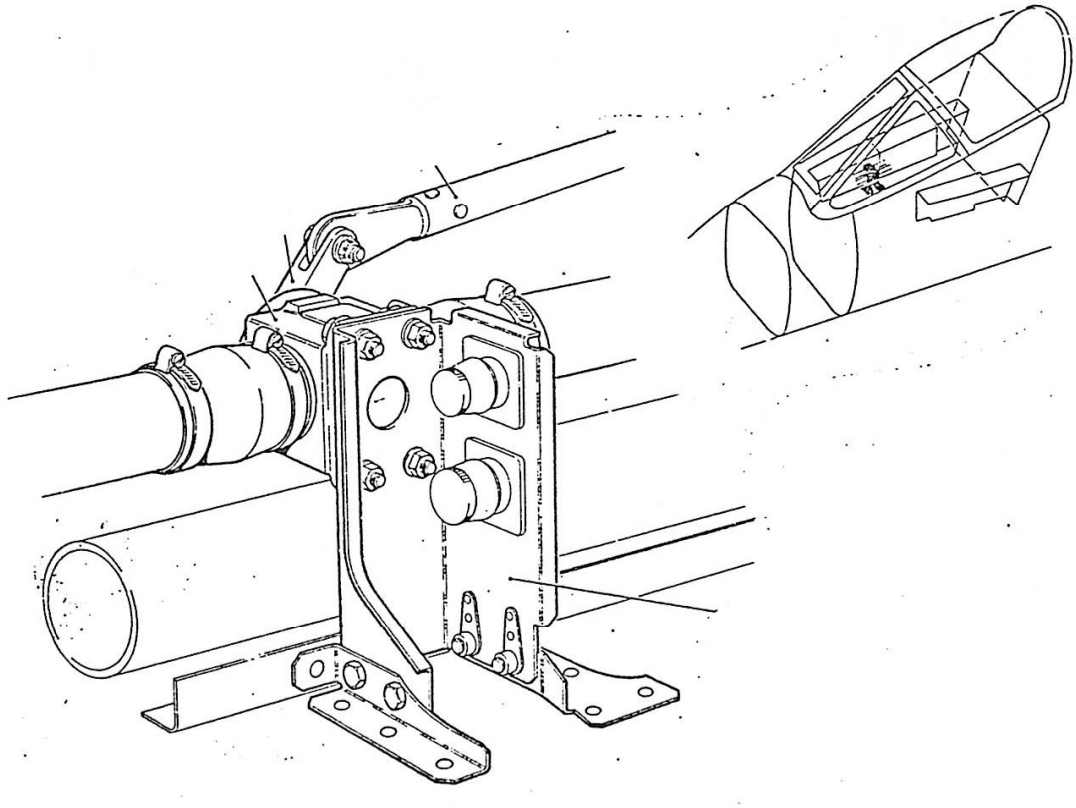

FIG. 18. BOOST DE-MIST VALVE

7. EQUIPMENT COMPARTMENT COOLING.

7.1. Introduction.

Provision is made to cool the following compartments:-

Forward and Rear Equipment Bays.

Battery Compartment.

Laser and Laser Window.

7.2. Forward & Rear Equipment Bays.

7.2.1. Introduction.

Normal cooling of the forward and rear bays is by using Cabin Discharge Air. This air is ducted into pipe lines from the outlet side of the cabin air discharge valves to the compartments.

Supplementary Cooling is provided by a by pass line, taken from the Main Air System between the water extractor and the cabin air shut off valve.

The supplementary system is operated by the following components:-

Two By Pass Valves, one to Control each Bay.

Two Thermoststs one to Control each Bay Temperature, and an Electrical Relay.

This system ensures that the temperature in the bays does not exceed $57^{o} \pm 3^{o}$ C.

Provision is made for cooling of the FORWARD EQUIPMENT BAY without the engine running during prolonged periods of testing equipment.

7.2.2. System Components.

7.2.2.1. Cabin By Pass Valves.

The Cabin By Pass Valves are 25mm and 40 mm Butterfly Valves. The 25mm Valve is for operation of the supplementary system to the Rear Equipment Bay and the 40 mm Valve is for the Forward Bay.

Each valve is driven by a 28V d.c. Split Field Series Motor, with limit switches.

The electrical system is designed to ensure the Rear Equipment Bay Valve opens first, when required and when fully open directs current to operate the Forward Bay Valve, when both valves are open and are required closed, the Rear Equipment Bay Valve will operate first.

7.2.2.2. Thermostats.

The two Thermostats, one fitted in each Equipment Bay, are connected in parallel.

When the temperature in either compartment reaches 57° ± 3° the Equipment Bay Ventilating Valve will OPEN

When the temperature drops to 42°C the valves will close. The temperature difference is due to a built in delay to prevent 'HUNTING'

- Operation.

Normal Equipment Bay Cooling is available providing:-

4-way lever is selected to POSITION 1.

The Canopy is CLOSED and LOCKED.

Main Air ON/OFF Pressure Reducing and Regulating Valve is selected to 'ON'.

If the temperature in either the FORWARD or REAR Equipment Bay increases to 57 ± 3°C a temperature sensor in that Equipment Bay senses an overheat indication, which transmits a signal to open both the REAR and FORWARD EQUIPMENT BAY VENTILATING VALVES, to allow a full flow of air to by-pass the cockpit for extra cooling.

Irrespective which equipment bay temperature sensor detects an overheat indication, the REAR EQUIPMENT BAY VENTILATING VALVE will be the FIRST to OPEN and when 'FULLY OPEN' operates a limit switch to allow the FORWARD EQUIPMENT BAY VENTILATING VALVE to OPEN. When both ventilating valves are OPEN electrical contacts within an electrical relay change over, ensuring that the same sequence of valve closing is maintained when the temperature control system reverts to normal. The system will revert to normal when the temperature sensors detect a falling temperature of 42 ± 2°C in the hottest bay.

When the 4 way lever is in any Position except 1 or the Canopy Micro Switches indicate 'Unlocked', the Cabin Shut Off Valve is 'Closed' and both Equipment Bay By Pass Valves are 'OPEN'.

The electrical current is directed to the amplifier which demands a cold supply of air.

7.3. Battery Compartment.

Conditioned air enter through drillings in the pipe leading to the Rear Equipment Bay, therefore all regulation of air is controlled by the operation of the components in Para. 6.1.2.

7.4. Laser Compartment.

7.4.1. Introduction.

The air conditioning of the Laser Compartment and the cooling of the Laser and electronics unit are two seperate system which are:-

Cooling of the Laser and Electronics Unit,

is by Cabin Discharge Air from the Slave Discharge Valve. The air is ducted through the Forward Equipment Bay around the laser and electronics unit, and is discharged into the Forward Equipment Bay. A shut off valve is fitted but only operates closed when ground cooling is in operation.

Compartment Conditioning,

Is controlled by circulation of the air in the compartment through a ducting. Fitted into the ducting are; a Fan, Heat Exchanger, and a Heating Element. Tapped into the Heat Exchanger is a branch line taken from the Cabin By Pass Line. The air is controlled by a shut off cock.

Three thermostats are fitted in the compartment, two control the air temperature between 35° to 45° C, the third ensures the temperature does not exceed 60°C near the laser window, when the temperature rises due to the slipstream acting on the window, the forth acts as a safety thermostat in the event of an A.C. Fan failure whilst the heat element is ON, inhibiting the system if the temperature should increase to 80°C.

7.4.2. System Components.

7.4.2.1. Shut Off Valve.

The valve consists of a Butterfly Valve operated by an electrical actuator through an internally splined shaft.

7.4.2.2. Ventilator Fan.

The fan is fitted in the ducting and is driven by a 200V A.C. three phase motor, which is operating all the time the laser is switched on.

7.4.2.3. Heat Exchanger.

The Heat Exchanger is fitted in the INLET side of the Compartment Ducting and bolted to the fan. The air passes around tubes and is circulated by the fan to the compartment. The tubes may be cooled by air from the By Pass Line, when the Shut Off Valve is open and is then exhausted into the Forward Equipment Bay.

7.4.2.4. 35° Thermostat.

Is fitted near the inlet to the ducting. When the temperature in the Bay drops to 35° ± 3°C the thermostat operates and switches on the heating element in the duct.

When the temperature increases above 35° ± 3°C the heater is switched off.

7.4.2.5. 45° Thermostat.

Is fitted near the inlet to the ducting. When the temperature rises above 45° ± 3°C the thermostat operates to open the shut off valve in the Heat Exchanger By Pass Line, which cools the air passing through the duct. When the temperature drops the thermostat closes the By Pass Valve.

7.4.2.6. 60° Thermostat.

Is fitted near the compartment window and operates at 60° ± 3°C.

When the temperature near the window exceeds 60° ± 3°C the thermostat will operate and open circuit the 35°C thermostat which 'MAY' have been operating the heater element. Therefore the heater would be switched off independant of the low temperature in the compartment.

7.4.2.7. Heating Element.

Is fitted between the fan and the outlet in the ducting.

It is a 350 W element operated by 115 V. A.C. Supply.

Controls.

When the aircraft is flying, the conditioning of the Laser Compartment is in operation when the pilots selects the laser switch on the Control Panel, fitted to the Port Side of the Windscreen Coaming.

The switch may be selected to either:-

L.R. (Laser Range) or T.S. (Target Search).

7.5. Ground Cooling.

7.5.1. Introduction.

During ground servicing operations, air is supplied to the operational equipment compartment and to the laser by a system of ducts and fans.

The operational equipment compartment is cooled by two fans which draw air in, via a ventilator flap on the starboard side of the front fuselage. The flap is operated by an actuator. The laser is cooled by a fan which draws air via a flap, operated by an actuator on the port side of the front fuselage.

To prevent loss of cooling air into the air conditioning system, the cabin by-pass valve and the shut-off valves are automatically closed when the ground cooling system is switched on.

The operation of the ground cooling system is controlled by the 'MASTER - ON/OFF GROUND' switch on the air conditioning control unit in the cockpit.

7.5.2. Components.

7.5.2.1. Fans.

The three fans operate from a 115/200 V a.c. three-phase supply. The laser cooling fan is located in the duct on the port side of the laser compartment. The operational equipment compartment cooling fans are located immediately above the ground cooling air inlet box on the starboard side of the operational equipment compartment.

7.5.2.2. Actuators.

Each actuator operates a ventilator flap via a linkage. Both are driven by 28V d.c. split-field series motors. The Laser compartment actuator is on the port side of the laser compartment, below the laser cooling fan. The operational equipment compartment actuator is on the starboard side of the operational equipment compartment, below the two cooling fans.

7.5.2.3. Shut-off Valve.

The shut-off valve is in the laser compartment and supplies cooling air to the laser from the slave discharge valve. The valve consists of two main sub-assemblies, an electrical actuator and a Butterfly Valve. The actuator is a 28V d.c., split-field, series wound motor. An internally splined shaft transmits the drive from the actuator to the Butterfly drive shaft which is supported in bearings; the Butterfly is secured to the shaft by a cotter pin.

7.5.3. Operation.

With the Power On and the Air Conditioning MASTER SWITCH operated to GROUND, an electrical supply is fed to three relays.

One Relay operates the Forward Equipment Bay By Pass Valve, to 'CLOSE'.

A 2nd Relay operates the actuators in the Forward Equipment Bay to open the ventilation doors, and start the fans.

A third Relay operates the Laser By Pass Valve to 'CLOSE', and an actuator to open a door to the Laser Compartment.

When the 'MASTER' switch is selected 'OFF' the fans cease, doors close, and the Shut Off and By Pass Valves return to open.

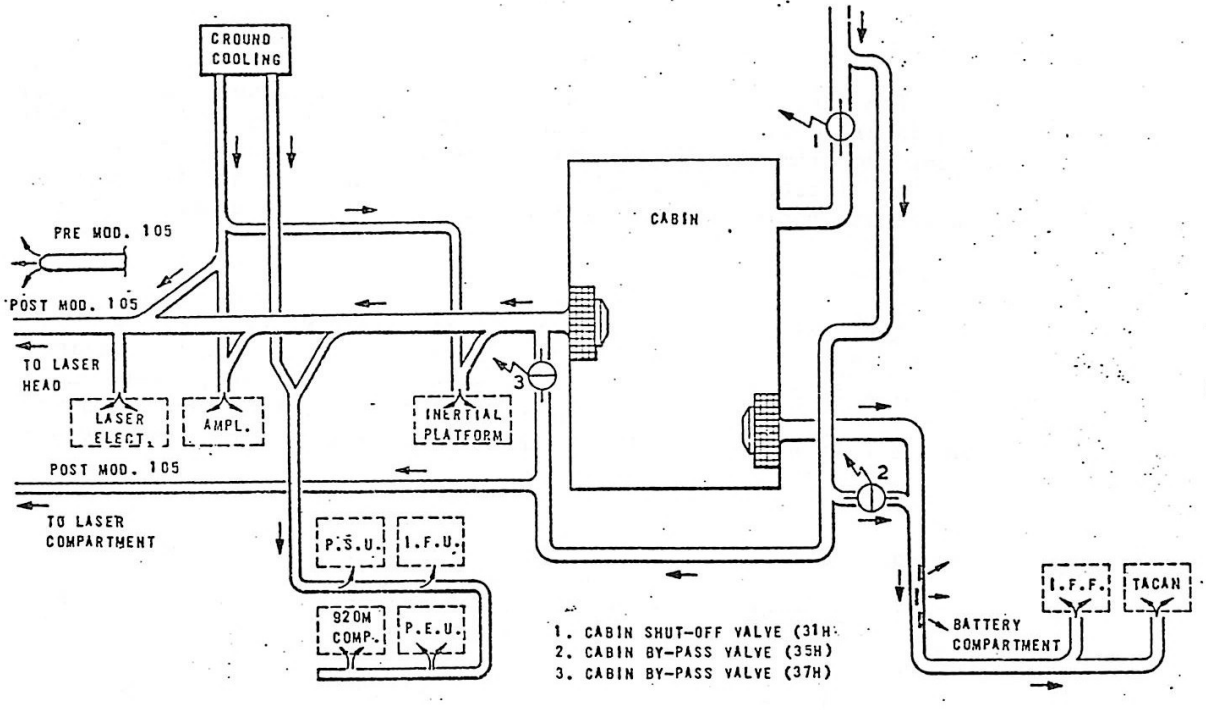

FIG. 19. EQUIPMENT COMPARTMENT COOLING – FLOW DIAGRAM

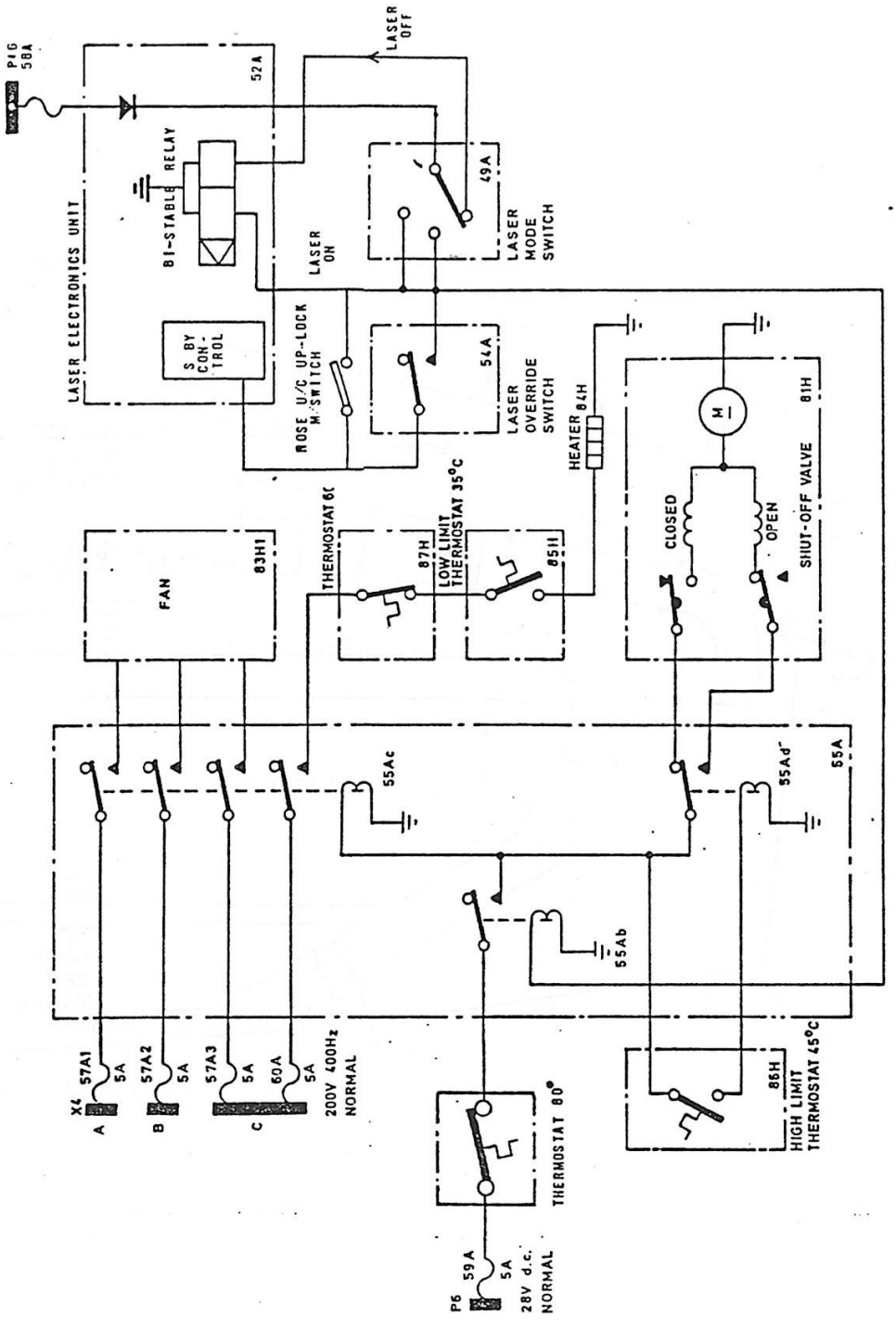

FIG. 19A LASER COMPARTMENT VENTILATION CIRCUIT DIAGRAM

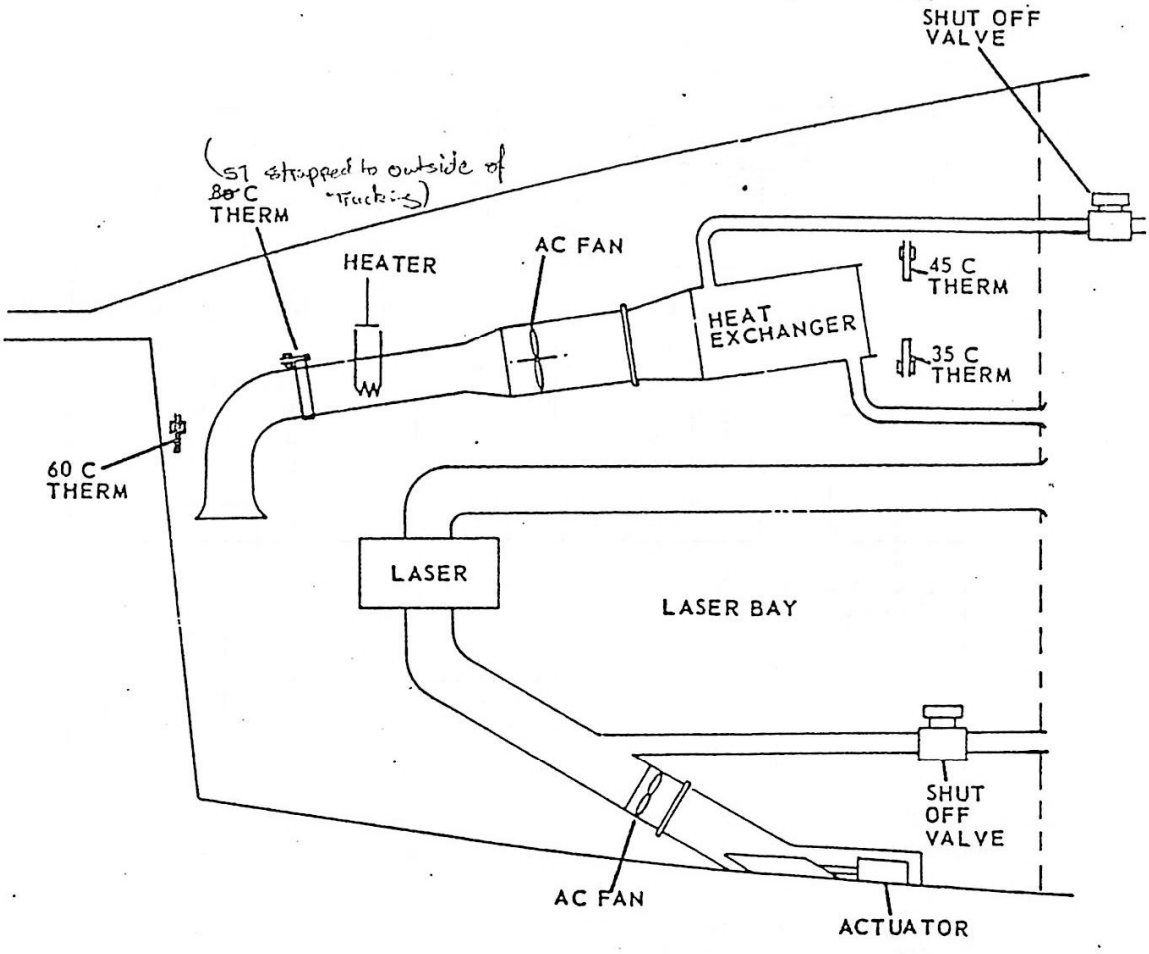

FIG.19B LASER COMPARTMENT CONDITIONING

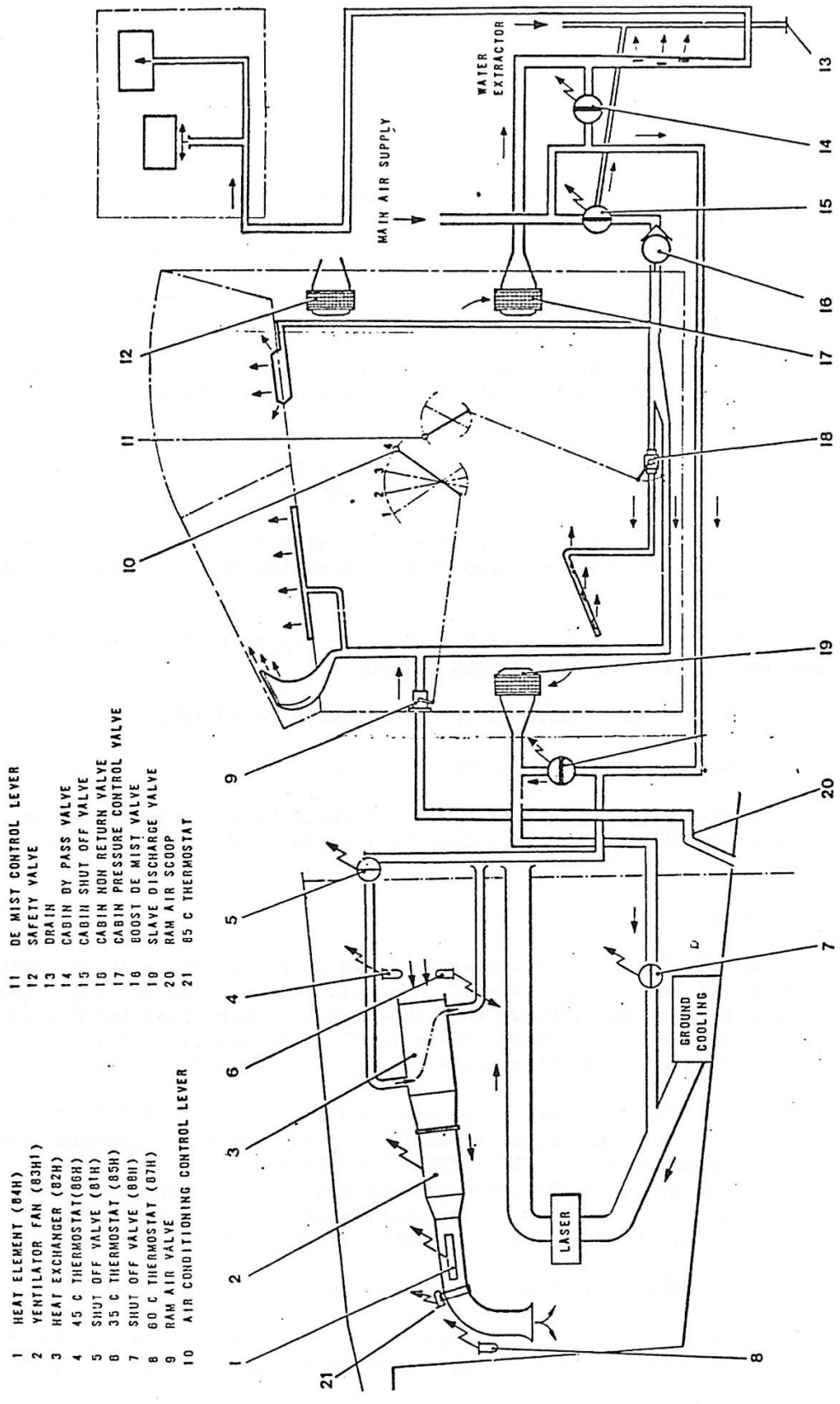

FIG. 20. EQUIPMENT BAYS AND LASER CONDITIONING

8. SERVICING.

8.1 Cabin Pressure Test.

8.1.1. Preparation.

Remove the CANOPY SEAL GROUND INFLATION TEST POINT BLANK and connect a suitable air supply capable of supplying a pressure of 70 p.s.i. with a self-contained filter and pressure regulating valve.

Remove the CANOPY SEAL GAUGE TEST POINT BLANK and attach a 0-20 p.s.i. pressure gauge.

Remove the blank fitted to the CABIN PRESSURE TEST POINT and connect a suitable air supply incorporating a regulator and ON/OFF valve as in sub para 1.

Remove the CABIN PRESSURE GAUGE TEST POINT BLANK and attach a 0-10 p.s.i. pressure gauge to the connection.

Disconnect the Cabin Pressure Control Valve low pressure pipe, SERVO VALVE VENT LINE to ATMOSPHERE CONNECTION 'C' and blank off the 'PIPE LINE'

Connect the Electrical Ground Power Supply to the aircraft and switch 'ON' the BATTERY MASTER SWITCH.

Set the 'AIR CONDITIONING' 4-way LEVER to POSITION 2.

CLOSE and LOCK the CANOPY.

Remove the Hydraulic System Test Point Blanks and connect an HYDRAULIC PRESSURE RIG to either No.1 or No.2. HYDRAULIC SYSTEM.

8.1.2. Procedure.

Slowly OPEN the regulator attached to the CANOPY SEAL INFLATION TEST POINT until a pressure of 15 p.s.i. registers on the regulator pressure gauge and INFLATE the CANOPY SEAL. Check that the Canopy Seal Pressure Gauge reads between 10.25-11.75 p.s.i. under no circumstances should this gauge read greater than 15 p.s.i.

Slowly OPEN the regulator attached to the GROUND PRESSURISATION TEST POINT, to pressurise the cabin at a flow rate not greater than 2 p.s.i./min until the INWARD/OUTWARD VENT VALVE CRACKS 'OPEN'. At this point the cabin pressure test gauge should read between 4.75-4.9 p.s.i. Under no circumstances should a pressure of 4.9 p.s.i. be exceeded. Hold the cabin pressure at this setting for 15 mins.

Apply Hydraulic Pressure to the Aircraft Hydraulic System.

Shut off the cabin air supply and record the pressure indicated on the Cabin Pressure Gauge at 10 SECOND INTERVALS. During this

8.1.2. (contd).
period operate the flying controls from either inside or outside of the cabin at least ONCE PER MINUTE.

Plot a graph of CABIN PRESSURE verses TIME and at the point 10 seconds after the air supply is shut off measure the shape of the graph. This gives the CABIN LEAK RATE which should not exceed 1.09 p.s.i/min.

8.1.3. Alternative Test.

Carry out test as in Para. 7.1.2. up to the point when the supply from the rig is shut off.

Shut off the supply to the cabin and measure the time taken for the Cabin Pressure to drop from 9 ins HG to 5 ins HG (4.42-2.455p.s.i).

This time should not be less than 170 secs.

NOTE:

The flying controls must be operated at least once per minute during the above test.

On completion of test restore the aircraft and system to its original state.

8.2. Canopy Seal System.

In order to carry out these tests it is necessary for an operator to be sitting inside the cockpit.

8.2.1. Procedure.

Connect the 28V Electrical Power Supply to the aircraft.

Connect suitable air supply to Canopy Seal Inflation Point.

Connect Pressure Gauge to Canopy Seat Test Connection.(20 p.s.i).

Set Canopy Seal Lever to Position 3.

Close and lock canopy, ensuring F.W.P. illumination RED light goes OUT.

Increase air supply to 15 p.s.i. and ensure test gauge reads between 10.25-11.75 p.s.i.

Check all canopy seal components for leaks.

Ensure Hood Seal Inflates.

Move the 4-way lever to position 4 and ensure that Hood Seal DEFLATES.

8.2.1. (contd).

Operate the 4-position lever to position 3 and 4 several times and check that HOOD SEAL INFLATES and DEFLATES.

Gradually increase air supply pressure to 70 p.s.i. and check that test gauge pressure does not exceed 11.75 p.s.i.

With air supply pressure of 70 p.s.i. operate the 4-position lever several times in position 3 and 4 and check Hood Seal Inflates and Deflates correctly.

With air supply still connected and pressure of 70 p.s.i. move 4-position lever to position 4 and unlock canopy.

8.3. Component Changing.

Access to the main air supply and refrigeration components is by removal of the spine panels. The water extractor is located in the nose undercarriage bay.

To allow for easy removal of the valves and components in the system items are mounted in line with their associated pipes. These components are secured to them by means of 'VEE' clamps. Sealing joints are stainless steel conoseals.

High Temperature Pipe Lines are lagged and where these connect to valves, associated joints are protected by Insulating Muffs.

Air Conditioning Components.

Component.	No. Off.	Part Number & Type.	Manufacturer.
Engine N.R.V.	2	3017.B.000	Normalair.
Primary Heat Exchanger.	1	D.3448-100A or E13010	Marston Excelsior Delaney Galley.
Pre-Cooler Ejector S.O.V.	1	5115-005-002	Teddington.
Pre-Cooler By-Pass Valve	1	728.549.3	Intertechnique.
Main Air P.R.V/ S.O.C.	1	4904-001-002	107B 09107-13A Teddington.

8.3. Air Conditioning Components.(contd).

Component.	No Off.	Part Number & Type.	Manufacturer.
Secondary Heat Exchanger (intercooler)	1	D.3437-1A	Marston Excelsior
Secondary Heat Exchanger Ejector S.O.V.	1	5106-034-002	Normalair
Cold Air Unit	1	1120-D-000	Normalair
Water Extractor	1	1374.C.000	Normalair.
Cabin S.O.V.	1	H.T.E. 9320	High Temperature Engineers.
Cabin N.R.V.	1	H.T.E. 367	High Temperature Engineers.
Temperature Sensor (direct temp.probe 2°C/80°C)	1	728.868.3	Intertechnique
Cabin By-Pass Valve Rear Equipment Bay Vent Valve (25 mm).	1	5106-031-000	Normalair.
Cabin By-Pass Valve Forward Equipment Bay Vent (40 m.m).	1	5106-029-00	Normalair.
Cabin Pressure Control Valve.	1	1486-A-000	Normalair.
Cabin Discharge/ Slave Valve.	1	1485-A-000	Normalair.
Inward/Outward Safety Valve.	1	1487-A-000	Normalair.
Boost Demist Valve. (40 m.m.)	1	N.F.A.R.204-005	Hymatic.

8.3. Air Conditioning Components (contd).

Component	No Off	Part Number & Type.	Manufacturer.
Canopy Seal N.R.V.	1	N.A.R.131-032	Hymatic.
Canopy Seal Purging Bottle/Water Trap.	1	121E-71-235 000	
Canopy Seal P.R.V.	1	P.A.S. 129-138	Hymatic.
Canopy Seal Ground Test Connection.	1	121E-71-237.000	
Canopy Seal Inflate/ Deflate Valve.	2	SAV-119-016	Hymatic
Cabin Pressure Test Connection.	1	1401-A	Normalair.
Emerg.Ram Air Valve	1	1475-A	Normalair.
Cabin Temperature sensing probes.	2	729-817-2	Intertechnique.
Cabin pressure failure switch.	1	4227B-01.01.00	SEMCA/Normalair.
Rear equipment bay temperature sensing probe.	1	780.171	Intertechnique.
Front equipment bay temperature sensing probe.	1	780.171	Intertechnique.
Laser Shut off valve	1.	7300.B.000	Normalair Garret.
Laser Compartment and Forward Equipment Bay Actuators.	2	27590	Aviac.

8.3. (contd). Air Conditioning Components.

Component.	No Off.	Part Number & Type.	Manufacturer.
Fans Ground Cooling.	3	2PL-81-1185	Plannair.

The above components are subject to Modification action, therefore this chart is only a guide.

8.4. FAULT DIAGNOSIS AND RECTIFICATION.

FAULT.	CAUSE.	REMEDY.
No air conditioning to cabin.	Failure of the air conditioning system control box microswitch.	Replace the microswitch.
Loss of cabin conditioning air.	Fuse 109H in 31a blown Fuse 112H in 32a blown Fuse 114H in 31a blown	) Replace the fuse.) If the fuse blows) again, investigate) for short circuits.)
	Pressure reducing valve failed closed.	Replace the valve.
	Cabin shut-off valve failed closed.	Replace the valve.
Reduction in cabin conditioning air flow with:		
- Hot air entering the cabin.	Cold air unit seized.	Replace the cold air unit.
- Normal temperature air entering the cabin.	Pressure reducing valve failed partially closed.	Replace the pressure reducing valve.
- Cold air entering the cabin.	Cabin temperature control failure (possibility of icing of the water extractor).	Refer to Para. 8.9.4.

FAULT.	CAUSE.	REMEDY.
Loss of cabin pressurisation.	Failure of air supply.	Refer to Para.8.1.2.or 3.
Loss of cabin pressure control.	Failure of the cabin pressure control valve Failure of the slave discharge valve.	) Replace the valve.
Cabin pressurizes when ram air is selected.	Failure of the safety valve.	Replace the valve.
No ram air.	Ram air valve failed closed.	Replace the valve.
Canopy seal does not inflate.	Failure of air supply. Blocked or damaged pipe. Pressure reducing valve seized closed. Canopy seal inflation/ deflation valves seized closed. Seal leaking	Replace pipe.) Replace the valves. Replace the seal.
Loss of 'AUTO' control.	Fuse 122H in 30a blown Unservicable amplifier.	Replace the fuse. If the fuse blows again, investigate for short circuits. Replace the amplifier..
Loss of 'MANUAL' control.	Fuse 121H in 30a blown. 'AUTO-MANUAL' switch unservicable.	Replace the fuse. If the fuse blows again, investigate for short circuits. Replace the air conditioning control unit.

FAULT.	CAUSE.	REMEDY.
Cabin temperature too high.	Cold air unit failure	Replace the cold air unit.
	Open circuited cabin sensor.	Locate the unserviceable cabin sensor and replace it.
	Unserviceable duct sensor.	Replace the duct sensor.
Cabin temperature varies with the engine speed.	Ejectors not operating	Refer to para. 8.10. or 11.
	Primary heat exchanger by-pass valve failed open.	Replace the valve.
Cabin temperature too low.	Unserviceable duct sensor (possibility of icing of the water extractor).	Replace the duct sensor.
	Short circuited cabin sensor.	Replace the cabin sensor.
	Temperature control valve failed 'cold'.	Replace the valve.
Cabin temperature surges.	Unserviceable amplifier.	Replace the amplifier.
Cabin temperature goes either fully hot or fully cold.	Unserviceable duct sensor.	Replace the duct sensor.
Ejector shut-off valves do not open.	Fuse 109H in 31a blown.	Refer to Para. 8.2.
	Relay 120H in 61a unserviceable.	Replace the relay.
	Valve(s) failed closed.	Replace the valve(s).

FAULT.	CAUSE.	REMEDY.
Ejector shut-off valves do not close.	Relay 120H in 61a unserviceable (contacts welded in open position)	Replace the relay.
	Signal pick-off unit unserviceable.	Replace the unit.
	Valve(s) failed open.	Replace the valve(s)
No cooling in equipment compartments and laser compartment.	Fuse 114H in 31a blown	Replace the fuse. If the fuse blows again, investigate for short circuits.
	No cabin air supply.	Refer to para. 8.1. or 2.
Laser compartment windows misting up.	Fuse 60A blown.	Replace the fuse. If the fuse blows again, investigate for short circuits.
	Heater inoperative	Replace the heater.
	35°C or 60°C thermostat unserviceable.	Replace the appropriate thermostat.
	Fuse 59A blown.	Replace the fuse. If the fuse blows again, investigate for short circuits.
	Fuses, 57A1, 57A2, 57A3, blown, fan (83H1) inoperative.	Check electrical connections and replace the fuse. If the fuse blows again, replace the fan.
	Shut-off valve 81H failed open.	Replace the valve.

FAULT.	CAUSE.	REMEDY.
No heat exchanger cooling air.	45°C thermostat unserviceable Shut-off valve 81H failed closed.	Replace the thermostat. Replace the valve.
Ground cooling flaps do not open.	Fuse 199H in 31a blown.	Replace the fuse. If the fuse blows again, investigate for short circuits.
One flap opens but the other flap remains closed.	Unserviceable flap actuator.	Replace the actuator.
Ground cooling fans do not operate.	Fuse 125H1, 125H2 or 125H3, in 30a blown.	Replace the fuse If the fuse blows again, investigate for short circuits.
One ground cooling fan will not operate.	Unserviceable cooling fan.	Replace the fan.

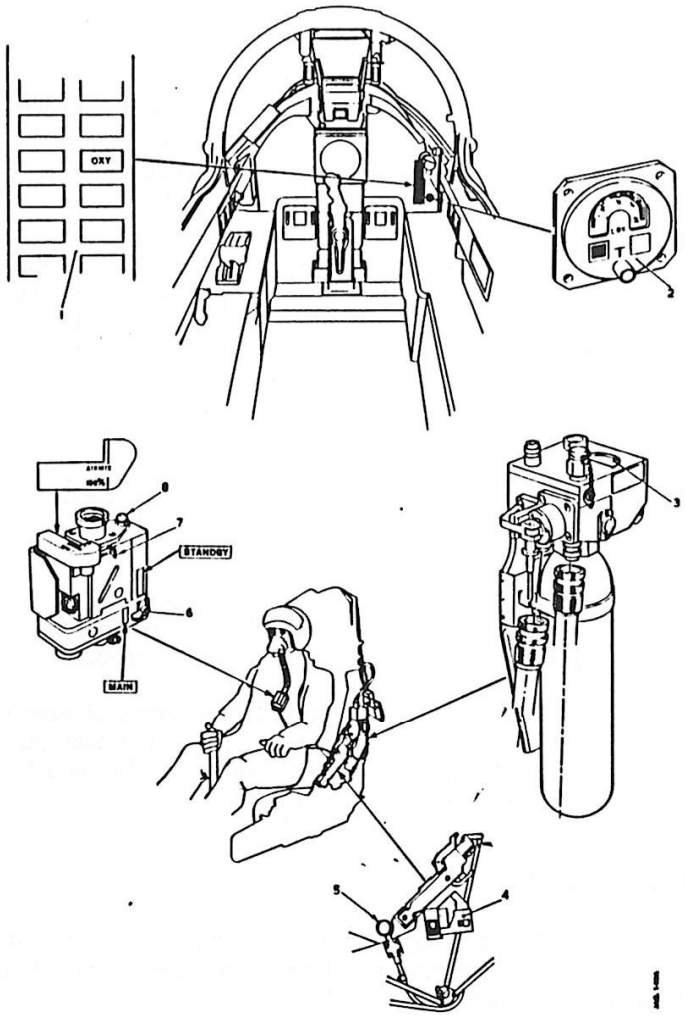

1–12 Fig.3 Oxygen System – Controls and Indicators

32. Details concerning the controls and indicators shown on Fig.3 are listed in Table 2.

TABLE 2 – OXYGEN SYSTEM – CONTROLS AND INDICATORS

Item No.	Item	Location	Marking	Remarks
1	Oxygen failure warning caption	Centralized warning panel	OXY	Red warning activates audio alarm and attention-getter when oxygen pressure falls below 30 PSI (2 bar)
2	LOX contents indicator	Right side panel	LOX–T 0– $\frac{1}{8}$th (red sector) $\frac{1}{8}$ths – $\frac{4}{4}$ (green sector)	Graduated in quarters. Press-to-test button. Magnetic black/white indicator (white when energized)
3	Emergency oxygen contents gauge	Top of emergency oxygen bottle at left rear of the seat	REFILL) Red 1800) line FULL) Black 2500) line	Normal operating pressure 1800 PSI (124 bar)
4	Oxygen on/off switch	Personal equipment connector (aircraft portion)	ON–OFF	Main supply is on when switch is fully forward
5	Emergency oxygen supply selector	Left side of seat forward of PEC	Yellow/black striped ring	Pull up to operate

Table 2 – continued

Item No.	Item	Location	Marking	Remarks
6	Regulator changeover switch	Miniaturized regulator – forward face	MAIN – STANDBY	Selects one of two regulators contained in single miniature assembly
7	Air dilution snap-over lever	Miniaturized regulator – top right	100%/ AIRMIX	Selects air/oxygen mixture or 100% oxygen as required
8	Press-to-test button	Miniaturized regulator – top left	–	Used to check for mask leaks and integrity of connections

DESCRIPTION OF THE SYSTEM

GENERAL

33. The aircraft has two oxygen systems, a main system and an emergency system which supp[lies] oxygen via a personal equipment connector (PEC) and a man-mounted regulator to the pilot's ox[ygen] mask. An oxygen on/off switch is mounted on the 'seat' portion of the PEC.

34. Oxygen for the main system is stored in liquid form and passed through an evaporator system which turns it into gas. Oxygen at medium pressure is then piped through an ejection seat/aircraft quick-release coupling. The main oxygen supply is also used for the anti-g system. The system is illustrated on Fig.4 ('S' version) and Fig.5 ('B' version).

MAIN OXYGEN SYSTEM

35. Liquid Oxygen Package Unit. The unit comprises a 17.6 pint (10 litre) capacity liquid oxygen container and an associated evaporator and stabilizing system housed in a sealed compartment on the right side of the nose fuselage.

36. System Pressure. The system operates at all pressures between 50 and 110 PSI (approximately 3 and 8 bar) but a valve regulates the working pressure to 75 PSI (5.17 bar). A relief valve operates if the pressure exceeds 115 PSI (approximately 8 bar) and if the valve fails a bursting disc in the LOX container blows out. An OXY red warning caption on the CWP accompanied by an audio alarm a[nd] the flashing attention-getter indicates that the oxygen pressure is below 30 PSI (2 bar).

37. Contents Indication. The contents of the LOX container are indicated on a gauge in the bottom right hand corner of the instrument panel. The gauge indications are 0, $\frac{1}{4}$, $\frac{1}{2}$, $\frac{3}{4}$, $\frac{4}{4}$. A test button marked T (at the bottom centre of the gauge) moves the pointer to zero when pressed, and the pointer returns to the original indication when the button is released. A magnetic indicator, also on the gauge, shows alternately black and white during normal breathing, i.e. black when there is no oxygen flow and white when oxygen is flowing. A second contents gauge is fitted externally on the right front fuselage.

38. Pressure Demand Regulator. The regulator is a miniaturized (man-mounted) unit designed for use with the V2 oxygen mask and associated flying clothing. Other types of oxygen mask are not compatible. The regulator incorporates a standby regulator in the lower part of the main assembly. Three controls are provided:

a. A MAIN/STANDBY lever on the forward face of the regulator for selecting either the main or standby regulator. The main regulator supplies an air/oxygen mix or 100% oxygen as required. The standby regulator supplies 100% oxygen only, with safety pressure at all altitudes up to 40,000 feet (12,196 m).

b. A 100%/AIRMIX lever on the top of the regulator; in the AIRMIX position, an air/oxygen mixture of appropriate proportions is delivered up to a cabin altitude of about 30,000 feet (9146 m). Above this altitude only 100% oxygen is supplied. With the lever at 100% pure oxygen only is delivered at a slight safety pressure at all altitudes. If the cabin becomes filled with smoke or fumes, 100% should be selected. Safety pressure is delivered above cabin altitudes of approximately 15,000 feet with AIRMIX selected. Both main and standby oxygen regulators automatically provide pressure breathing at cabin altitudes in excess of 40,000 feet.

c. A press-to-test button at the top left of the regulator provides a facility for checking the oxygen mask for leaks by allowing oxygen to be passed under pressure to the mask.

The main regulator incorporates an anti-drowning device which shuts off the air-inlet to the regulator via the dilution port whenever supply inlet pressure to the main regulator ceases (i.e. selection of the standby regulator or following ejection).

OXYGEN MASK

39. The type V2 oxygen mask is designed for use with the miniaturized regulator. The mask incorporates an anti-suffocation valve in the right side of the mask facepiece. There is no inlet non-return valve in this mask and it has a hose with a central tube which runs from the underside of the compensated expiratory valve to the control side of the regulator, via the mask hose regulator connection.

EMERGENCY OXYGEN SYSTEM

40. The emergency oxygen supply is contained in gaseous form in a bottle fitted to the left rear of the ejection seat. A pressure/contents gauge is fitted to the top of the oxygen bottle; the gauge should indicate 1800/FULL or above before flight. The oxygen feeds into the rear of the 'seat' portion of the PEC then into the oxygen regulator supply hose. If the main oxygen system fails, emergency oxygen may be manually selected by pulling up the yellow and black striped ring on the left side of the seat immediately forward of the PEC. During ejection the emergency oxygen is switched on automatically when the seat rides up the rails and the main oxygen supply is disconnected. The emergency supply lasts for approximately 10 minutes and flows at a pressure of 50 PSI (3.4 bar) through the PEC to the regulator.

41. When the pilot separates from the seat after ejection, the separation of the 'man' and 'seat' portions of the PEC breaks the emergency supply.

42. Oxygen from the emergency system is prevented from flowing while the main oxygen supply pressure is greater than the 50 to 58 PSI of the emergency system. Thus to select emergency supply with an intact main supply, the main supply must be switched off. A shuttle valve in the PEC prevents oxygen from the main system being discharged to atmosphere when the 'man portion' of the PEC is disconnected with the main oxygen switch on and oxygen being discharged from the emergency system when the main switch is off and the emergency supply is flowing.

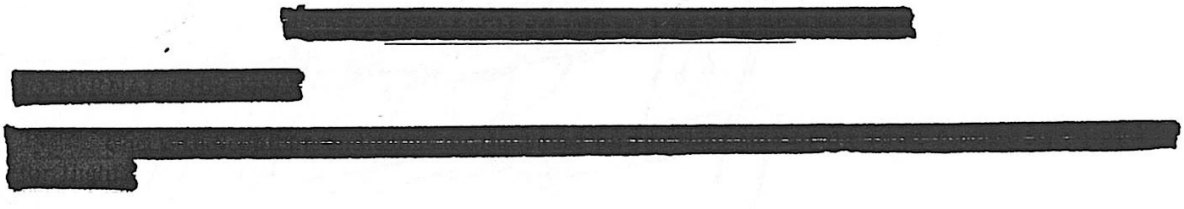

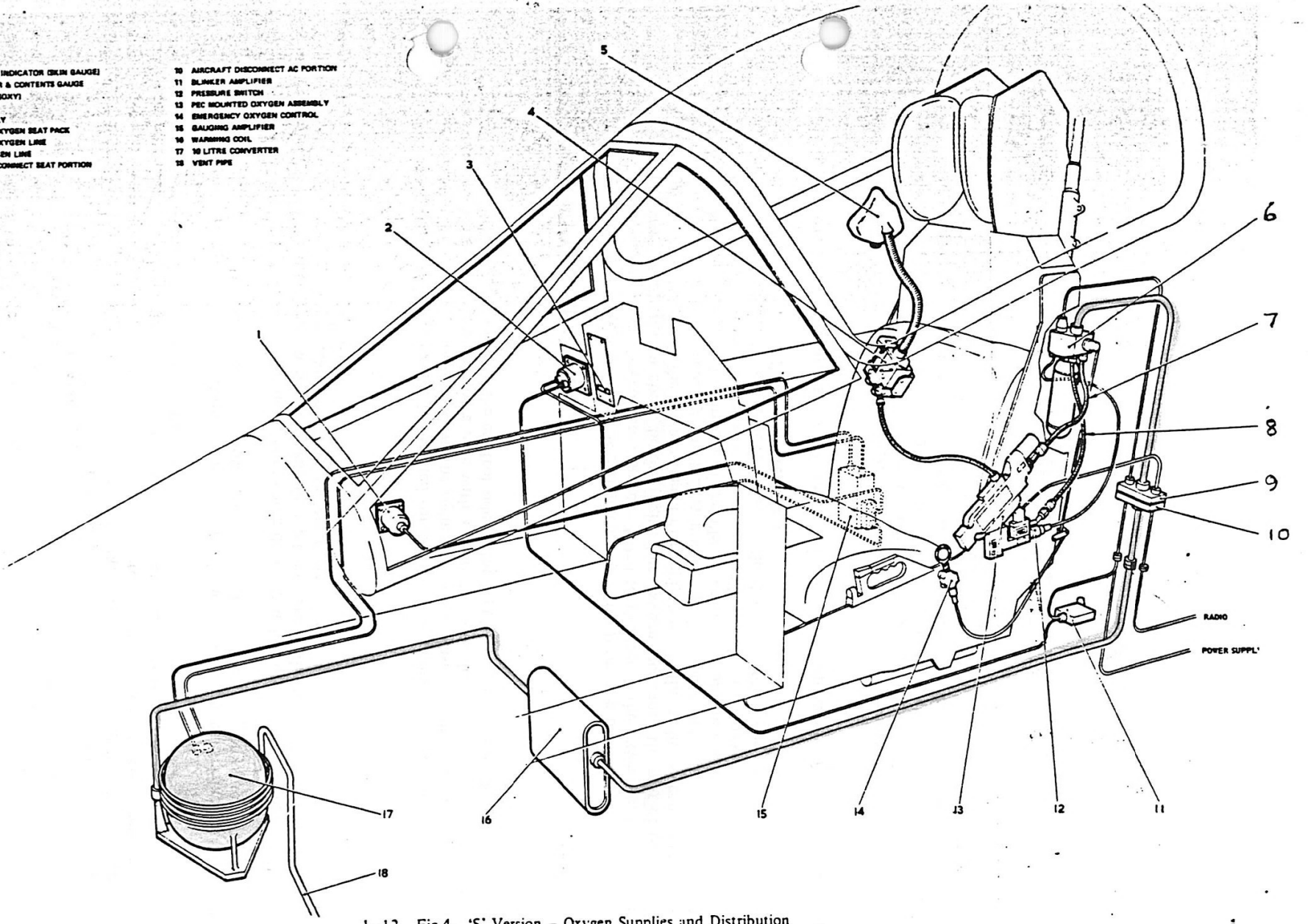

1–12 Fig.4 'S' Version – Oxygen Supplies and Distribution

1 FILLING POINT INDICATOR (SKIN GAUGE)
2 LOX INDICATOR & CONTENTS GAUGE
3 CWP WARNING (OXY)
4 REGULATOR
5 MASK ASSEMBLY
6 EMERGENCY OXYGEN SEAT PACK
7 LOX INDICATOR & CONTENTS GAUGE – REAR
8 CWP WARNING (OXY) – REAR
9 REGULATOR – REAR
10 MASK ASSEMBLY – REAR
11 EMERGENCY OXYGEN SEAT PACK – REAR
12 EMERGENCY OXYGEN LINE – REAR
13 NORMAL OXYGEN LINE – REAR
14 AIRCRAFT DISCONNECT SEAT PORTION – REAR
15 AIRCRAFT DISCONNECT AC PORTION – REAR
16 BLINKER AMPLIFIER – REAR
17 PRESSURE SWITCH – REAR
18 PEC MOUNTED OXYGEN ASSEMBLY – REAR
19 EMERGENCY OXYGEN CONTROL – REAR
20 AIRCRAFT DISCONNECT SEAT PORTION
21 AIRCRAFT DISCONNECT AC PORTION
22 NORMAL OXYGEN LINE
23 EMERGENCY OXYGEN LINE
24 BLINKER AMPLIFIER
25 PRESSURE SWITCH
26 PEC MOUNTED OXYGEN ASSEMBLY
27 EMERGENCY OXYGEN CONTROL
28 WARMING COIL
29 10 LITRE CONVERTER
30 VENT PIPE

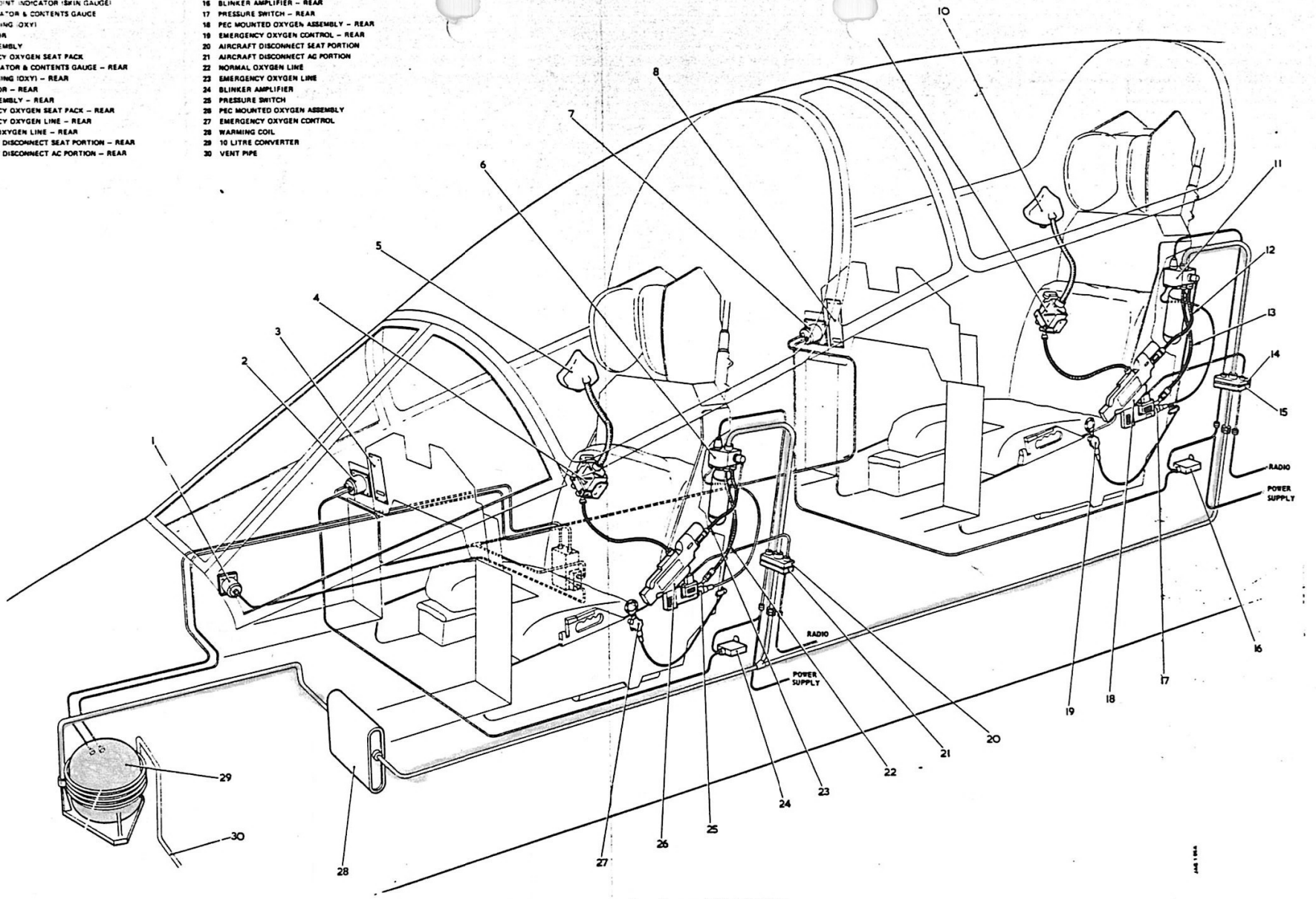

1–12 Fig.5 'B' Version – Oxygen Supplies and Distribution