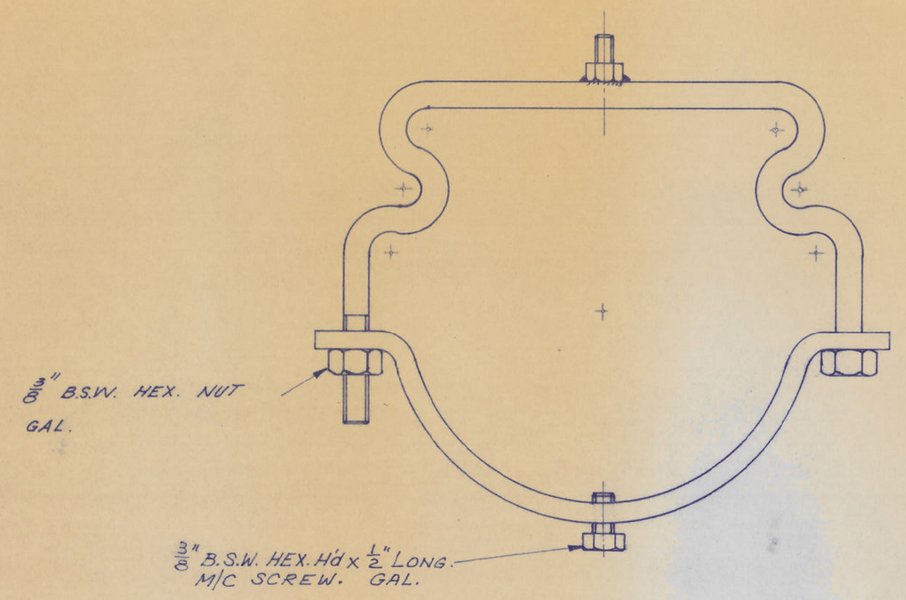

ASSEMBLY

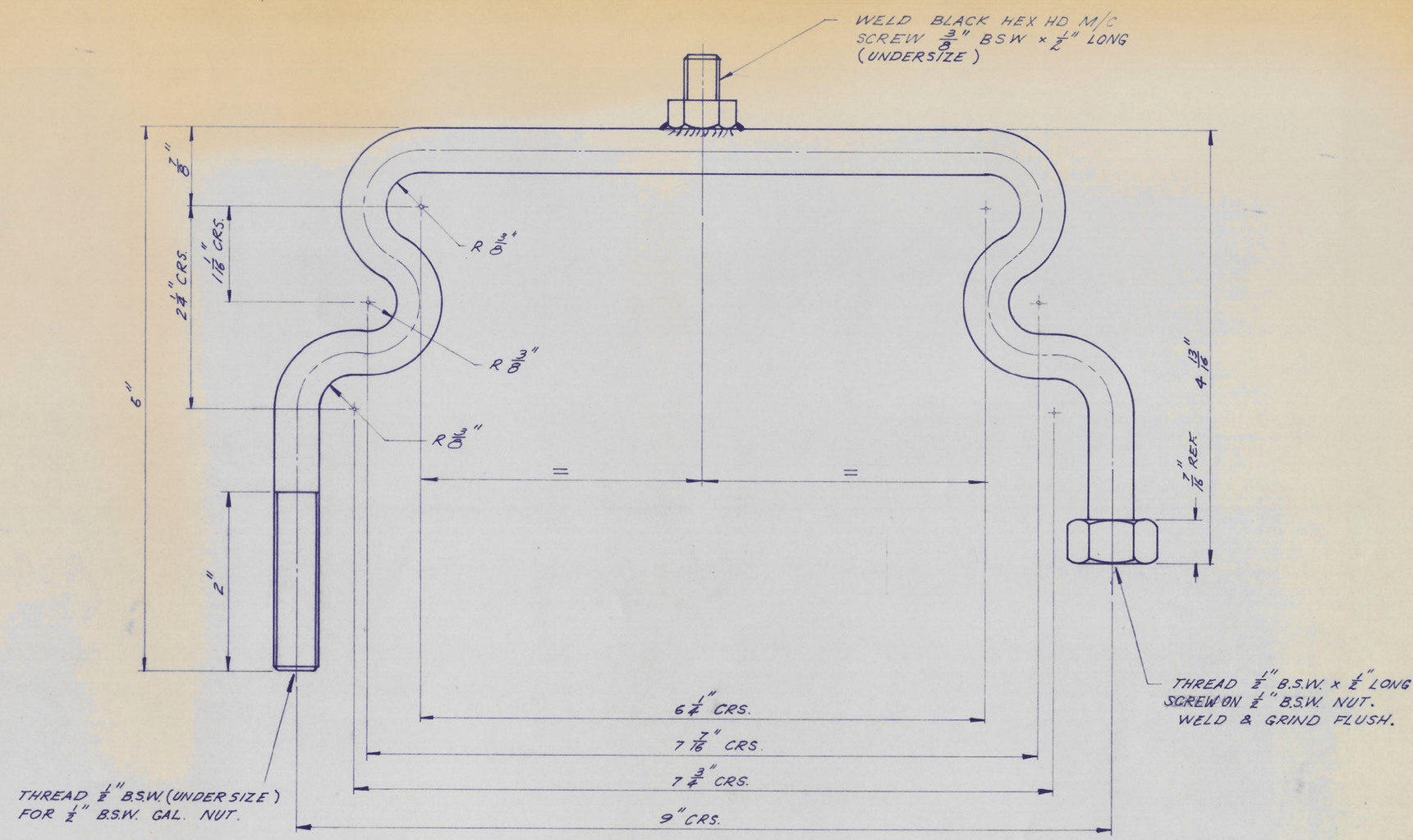

CLAMP BOLT

MATL. 1/2" BLACK M.S. ROD
Nº OFF 1
DEVELOPED LENGTH 18 1/4"

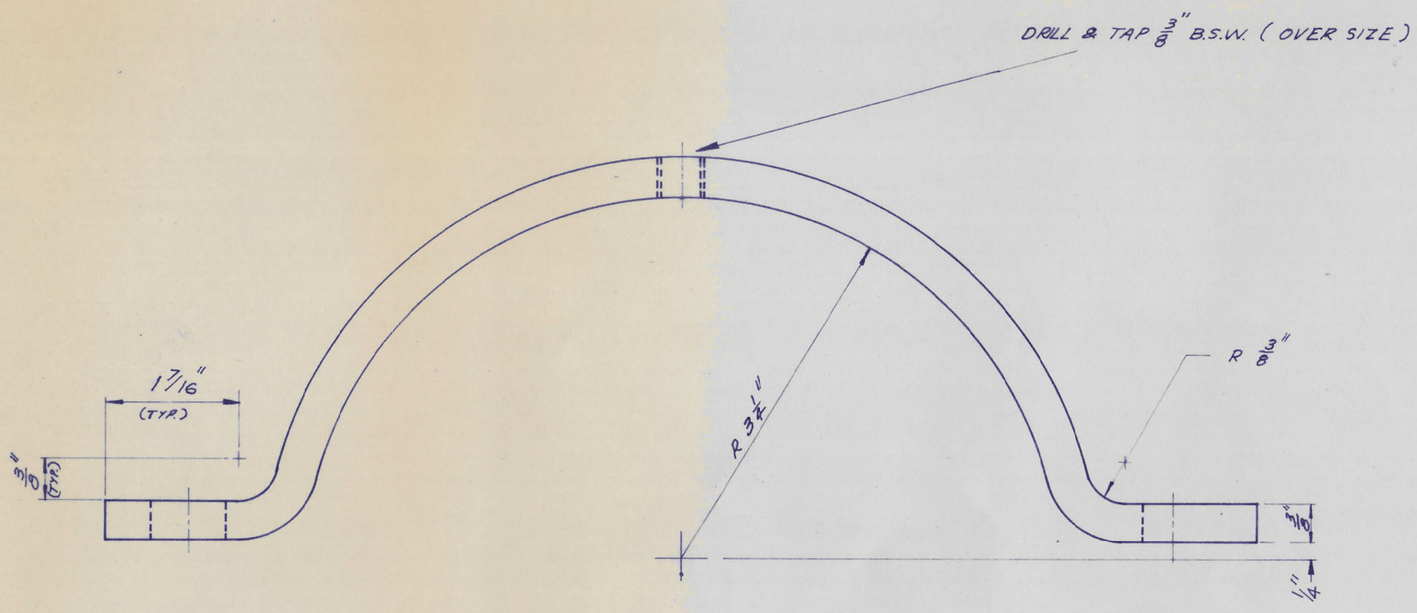

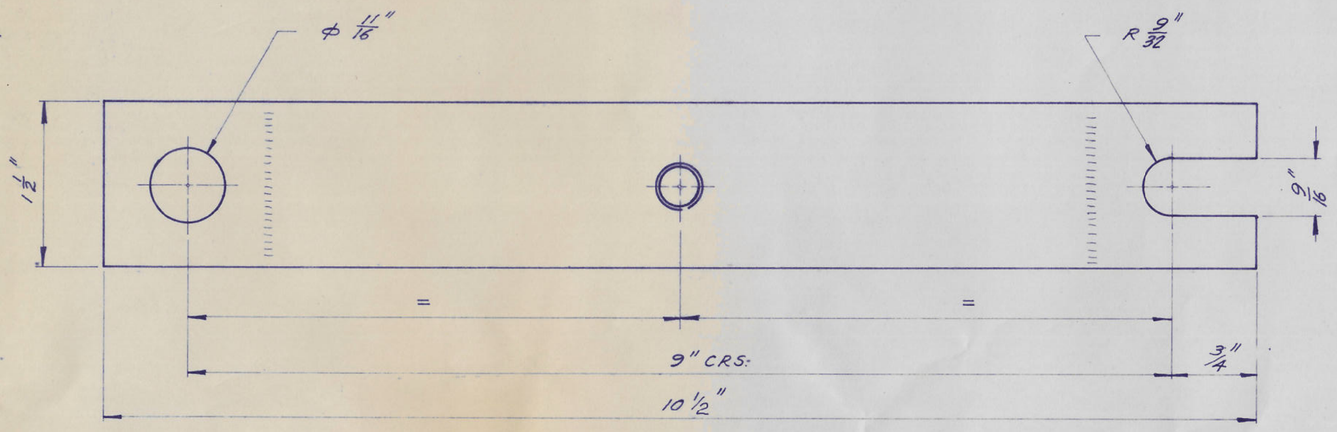

CLAMP BODY

MATL. 3/8" BLACK M.S. ⊥
Nº OFF 1
DEVELOPED LENGTH 13"

TOLERANCE LENGTHS & CENTRES ± 1/16"
HOLES & RADII ± 1/32"

FINISH GALVANIZE ALL PARTS

REVISION			
9.9.78	A	DRG Nº WAS VW 4/95	

REFERENCE DRAWINGS	
4 1/2" TRAM POLE BRACKET	RWS 496
5 1/2" TRAM POLE BRACKET	RWS 497
8" TRAM POLE BRACKET	RWS 50
6 1/2" TRAM POLE BRACKET MK I	RWS 310

STATE ELECTRICITY COMMISSION OF VICTORIA
SUPPLIES & GENERAL SERVICES DEPARTMENT

SCALE: FULL SIZE | DRG. Nº RWS 311

6 1/2" TRAM POLE BRACKET
ASSEMBLY & DETAILS MK II

DRAWN P. NOCKER 29.7.76
CHECKED W. McNERE 3-8-76
APPROVED 1-10-76
A/ CENTRAL WORKSHOPS ENGINEER
C.W.D. RICHMOND

I.S.O. SIZE A1 594 x 841 MM